CCD-TR50E

SERVICE MANUAL

AEP Model
UK Model
Australian Model
E Model

Handycam

U MECHANISM

For MECHANISM ADJUSTMENTS, refer to the "8 mm Video MECHANICAL ADJUSTMENT MANUAL III" (9-972-732-11).

SPECIFICATIONS

System

Video recording system
Rotary two heads, Helical scanning FM system
Audio recording system
Rotary head, FM system
Video signal PAL colour, CCIR standards
Usable cassette 8 mm video format cassette
Tape speed SP mode: Approx. 20.051 mm/second.
LP mode: Approx. 10.058 mm/second
Recording time SP mode: 1 hour and 30 minutes (P5-90)
LP mode: 3 hours (P5-90)
Playback time SP mode: 1 hour and 30 minutes (P5-90)
LP mode: 3 hours (P5-90)
Fast-forward/rewind time
Approx. 8.5 min. (P5-90)
Image device CCD (Charge Coupled Device)
Viewfinder Electronic viewfinder (black and white)
Lens Combined 8 × power zoom lens
f = 7 – 56 mm (9 1/32 to 2 3/4 inches),
F 1.6 with macro filter diameter: 37 mm (1 1/2 inches)
Auto focus system
TTL
Colour temperature
Automatic, HOLD, ☼ (indoor) 3200K, ☀ (outdoor) 5,800K
Minimum illumination
5 lux (F 1.6)
Illumination range
5 lux – 100,000 lux
(0.5 – 9,290 footcandles)
Recommended illumination
More than 150 lux (14 footcandles)

Input and output connector
AEP, UK model

Video output Phono jack, 1 Vp-p, 75 ohms unbalanced sync negative
Audio output Phono jack
Output: – 7.5 dBs, (at output impedance 47 kilohms) impedance less than 2.2 kilohms

– Continued on next page –

MICROFILM

8 VIDEO CAMERA RECORDER

SONY

Input and output connector
E, Australian model

Video input/output
Selectable with IN/OUT selector
Phono jack (1), 1 Vp-p, 75 ohms
unbalanced sync negative

Audio input/output
Selectable with IN/OUT selector
Phono jack (1)
Input: −7.5 dBs, input impedance more than 47 kilohms
Output: −7.5 dBs, (at output impedance 47 kilohms) impedance less than 2.2 kilohms

RFU DC OUT — Special minijack (1), DC 5V
Earphone jack — Minijack (1), impedance 8 ohms
Remote jack — Stereo mini-minijack
MIC jack — Minijack (1), −66 dBs, low inpedance with 2.5−3 V DC output, impedance 6.8 kilohms

General

Power requirements
On battery mounting surface
6.0 V (battery pack)
7.5 V (AC power adaptor)
9.0 V (alkaline batteries)

Power consumption
5.4 W (camera recording) including the viewfinder

Installation — Vertically, Horizontally

Operating temperature
0°C to 40°C (32° F to 104° F)

Storage temperature
−20°C to +60°C
(−4° F to +140° F)

Dimensions — Approx. 127 × 122 × 185 mm (w/h/d) (5 × 4 7/8 × 7 3/8)

Weight — Approx. 950 g (2 lbs 2 oz) excluding the battery and cassette

Microphone — Electret condenser microphone, monaural type

Supplied accessories

- Battery pack NP-55 (1)
- AC power adaptor AC-V35A (1)
- Lithium battery CR2025 (1)
- **RFU adaptor** **RFU-90E (1) (AEP model)** **RFU-90AS (1) (Australian model)** **RFU-89EA with an aerial selector and a screwdriver (1) (UK/E model)**
- Step-up-ring ø37mm → ø46mm (1)
- Shoulder strap (1)
- Jack cover (1)*
- Lens cap (1)*
- Tape (1)

Design and specifications are subject to change without notice.

Note
This appliance conforms with EEC Directive 87/308/EEC regarding interference suppression.

SAFETY CHECK-OUT

After correcting the original service problem, perform the following safety checks before releasing the set to the customer:

1. Check the area of your repair for unsoldered or poorly-soldered connections. Check the entire board surface for solder splashes and bridges.
2. Check the interboard wiring to ensure that no wires are "pinched" or contact high-wattage resistors.
3. Look for unauthorized replacement parts, particularly transistors, that were installed during a previous repair. Point them out to the customer and recommend their replacement.
4. Look for parts which, though functioning, show obvious signs of deterioration. Point them out to the customer and recommend their replacement.
5. Check the B+ voltage to see it is at the values specified.

SAFETY-RELATED COMPONENT WARNING!!

COMPONENTS IDENTIFIED BY MARK ⚠ OR DOTTED LINE WITH MARK ⚠ ON THE SCHEMATIC DIAGRAMS AND IN THE PARTS LIST ARE CRITICAL TO SAFE OPERATION. REPLACE THESE COMPONENTS WITH SONY PARTS WHOSE PART NUMBERS APPEAR AS SHOWN IN THIS MANUAL OR IN SUPPLEMENTS PUBLISHED BY SONY.

TABLE OF CONTENTS

Section	Title	Page
SERVICE NOTE		
Head Cleaning		6
Semiconductor Location		6
1.	GENERAL	
Identifying the Parts		7
Connecting the Power Sources		9
Setting the Date and Time		12
Inserting a Tape		13
Fade-in and Fade-out		14
Recording a Title		14
Indications Inside the Viewfinder and the Display Window		14
2.	DISASSEMBLY	
2-1.	Removal of Cassette Lid Block Assembly	17
2-2.	Removal of Cabinet (Top) Assembly	17
2-3.	Removal of Cabinet (Front) Assembly	17
2-4.	Removal of Cabinet (Left) Block Assembly	17
2-5.	Removal of VTR and Camera Block	18
2-6.	Removal of CF-23P Board, CF-24P Board, CF-25P Board and JC-10P Board	18
2-7.	Removal of PIN JACK Assembly	18
2-8.	Removal of DC-DC Converter Unit	19
2-9.	Removal of Camera Block	19
2-10.	Removal of Lens Assembly	19
2-11.	Removal of AU-92P Board	19
2-12.	Removal of FK-41P and Push Switch	20
2-13.	Removal of VS-69 Board	20
2-14.	Removal of CC-52P Board	20
2-15.	Removal of MD Block	21
2-16.	Removal of Cassette Compartment Assembly	21
2-17.	Removal of EVF Assembly	21
2-18.	Internal View	22
3.	DIAGRAMS	
3-1.	Circuit Boards Location	23
3-2.	Overall Block Diagram	24
3-3.	Camera Block Diagram	28
3-4.	Auto Focus Block Diagram	33
3-5.	Camera Function/Digital Titler Block Diagram	37
3-6.	Video (1) Block Diagram	41
3-7.	Camera REC Block Diagram	45
3-8.	Video (2) Block Diagram	47
3-9.	Servo Block Diagram	49
3-10.	System Control Block Diagram	53
3-11.	System Control Section Function Description	57
3-11-1.	Mode/Mechanism Control Microcomputer CXP80116 (IC601 on VS-63 Board)	57
3-11-2.	DDS Microcomputer μPD7503GF (IC561 on VC-81P Board)	61
3-11-3.	EVR Microcomputer MC68HC05N4 (IC361 on VC-81P Board)	65
3-12.	Interface	69
3-12-1.	System Control — Video Audio Block Interface	69
3-12-2.	System Control — Servo Block Interface	73
3-12-3.	Timing Chart	75
3-13.	Audio Block Diagram	77
3-14.	View finder Block Diagram	81
3-15.	Power Block Diagram	85
4.	PRINTED WIRING BOARDS AND SCHEMATIC DIAGRAMS	
4-1.	Frame Schematic Diagram	89
4-2.	Printed Wiring Boards and Schematic Diagrams	93
	• VC-81P Board	94
	• VC-81P Board	101
	• VC-81P, CB-33P, CB-35P, JC-10P Boards, LCD Block	109
	• VC-81P Board	117
	• CD-50P Board	123
	• LD-38P Board	127
	• TI-32P Board	131
	• VS-69 (Head Amp) Board	136
	• VS-69 (Video), CB-32P Boards, PIN JACK Assembly	143
	• VS-69 (Servo/System Control) Board	152
	• AU-92P, MA-71P Boards	161
	• CC-52P, FP-89, FP-90 Boards	168
	• FK-41P, SW-158P, EJ-20P Boards	173
	• CB-34P, CF-22P, CF-23P, CF-24P, CF-25P Boards	178
	• VF-41P Board	184
	• DD-31P Board	189
4-3.	Semiconductors	194
5.	EXPLODED VIEWS	
5-1.	Cabinet (Left) Block	195
5-2.	Cabinet (Right) Block	196
5-3.	Main Board Block	197
5-4.	Camera Block	198
5-5.	MD Block Assembly (1)	199
5-6.	MD Block Assembly (2)	200
5-7.	MD Block Assembly (3)	201
5-8.	Zoom Lens Assembly	202
6.	ELECTRICAL PARTS LIST	203
HARDWARE LIST		230

Section	Title	Page
7.	CAMERA ADJUSTMENTS	
7-1.	Pre-Adjustment Preparations (Camera Block)	231
7-1-1.	List of Servicing Jigs	231
7-1-2.	Preparations	232
7-1-3.	Precautions	233
7-1-4.	Adjustment Remote Controller	234
7-1-5.	Check Point Array	239
7-1-6.	AF Microprocessor Data Reading Jig	239
7-1-7.	Data Processing	240
7-2.	Camera System Adjustments	241
7-2-1.	Flange Back Adjustment	241
7-2-2.	Power Supply Adjustment	242
7-2-3.	EVR Initial Settings	242
7-2-4.	28MHz Local Oscillation Adjustment (VC-81P board)	243
7-2-5.	PLL Adjustment (VC-81P board)	243
7-2-6.	PG CONT and VSUB Adjustment	243
7-2-7.	Hall Adjustment (LD-38P Board)	244
7-2-8.	Iris Adjustment (VC-81P Board)	244
7-2-9.	Hall In/Out Adjustment (VC-81P Board)	245
7-2-10.	AGC Adjustment (VC-81P Board)	245
7-2-11.	Y Signal Matrix Adjustment (VC-81P Board)	245
7-2-12.	Chroma Signal Matrix Adjustment (1) (VC-81P board)	246
7-2-13.	Chroma Signal Matrix Adjustment (2) (VC-81P Board)	246
7-2-14.	YH Level Adjustment (VC-81P Board)	247
7-2-15.	Sync Level Adjustment (VC-81P Board)	247
7-2-16.	Setup Adjustment (VC-81P Board)	247
7-2-17.	White Clip Adjustment (VC-81P Board)	248
7-2-18.	Y Level Adjustment (VC-81P Board)	248
7-2-19.	Max. Gain Adjustment (VC-81P Board)	249
7-2-20.	Aperture Adjustment (VC-81P Board)	249
7-2-21.	Chroma Level Adjustment (VC-81P Board)	250
7-2-22.	Burst Phase Adjustment (VC-81P Board) (Method Using Vectorscope)	250
7-2-23.	Burst Phase Adjustment (VC-81P Board) (Mothod Using Oscilloscope)	251
7-2-24.	Burst Level Adjustment (VC-81P Board)	251
7-2-25.	Indoor White Balance Adjustment (VC-81P Board) (Method Using Vectorscope)	252
7-2-26.	Indoor White Balance Adjustment (VC-81P Board) (Method Using Oscilloscope)	252
7-2-27.	Color Reproduction Adjustment (Method Using Vectorscope)	253
7-2-28.	Color Reproduction Adjustment (Method Using Oscilloscope)	253
7-2-29.	Auto White Balance Adjustment	255
7-2-30.	Outdoor White Balance Check (VC-81P Board)	259
7-2-31.	Auto White Balance Check (VC-81P Board)	260
7-2-32.	Focus Motor Speed Adjustment (VC-81P Board)	260
7-2-33.	Macro Area Adjustment (VC-81P Board)	261
7-2-34.	Auto Focus Adjustment (VC-81P Board)	261
7-2-35.	Auto Focus Check	262
7-2-36.	Fader Level Adjustment	262
7-2-37.	Power Zoom Speed Check	263
7-3.	Camera REC System Adjustments	263
7-3-1.	VCO Adjustment (VC-81P Board)	263
7-3-2.	Chroma Input Level Adjustment (VC-81P Board)	263
7-3-3.	Recording Chroma RF Level Adjustment (VC-81P Board)	264
7-3-4.	Y FM Carrier Frequency Adjustment (VC-81P Board)	264
7-3-5.	Y FM Deviation Adjustment (VC-81P Board)	264
7-3-6.	REC Y Level Adjustment (VC-81P Board)	265
7-4.	Digital Titler System Adjustments	265
7-4-1.	Titler PLL Adjustment (TI-32P Board)	265
7-4-2.	Character Generator f0 Adjustment (TI-32P Board)	265
7-4-3.	Title A/D Level Adjustment	266
7-4-4.	Title Y Level Adjustment (VC-81P Board)	266
7-5.	Electronic Viewfinder System Adjustment (VF-41P Board)	267
7-5-1.	Horizontal Tilt Adjustment	267
7-5-2.	Centering Adjustment	267
7-5-3.	AFC Adjustment	267
7-5-4.	Horizontal Amplitude Adjustment	268
7-5-5.	Vertical Amplitude Adjustment	268
7-5-6.	Focus Adjustment	268
7-5-7.	Brightness, Contrast Adjustments	268
7-6.	Arrangement Diagram for Adjustment Parts	270
8.	MECHANISM BLOCK ADJUSTMENT	
8-1.	Operating with the Cassette Compartment Holder Assembly Removed	275
8-2.	Tape Path Adjustment	276
9.	VIDEO BLOCK ADJUSTMENTS	
9-1.	Pre-Adjustment Preparations (Video Block)	277
9-1-1.	Equipment to be Used	277
9-1-2.	Connection of Equipment	277
9-1-3.	Note on Adjustments	278
9-1-4.	Set-up for Adjustment	278
9-1-5.	Alignment Tapes	279
9-1-6.	I/O Level and Impedance	279
9-1-7.	Service Modes	280
9-2.	Power Supply Block Adjustments	281
9-2-1.	Oscillation frequency adjustment (DD-31P Board)	281
9-2-2.	Video 5V adjustment (DD-31P Board)	281
9-2-3.	Power Supply Check (VS-69 Board)	281
9-3.	System Control Adjustments	282
9-3-1.	Battery Down Adjustment (DD-31P Board)	282
9-3-2.	System Clock Adjustment (VC-81P Board)	282
9-4.	Servo System Adjustments	283
9-4-1.	Capstan FG Frequency Check (VS-69 Board)	283
9-4-2.	Capstan FG Offset Adjustment (VS-69 Board)	283
9-4-3.	Drum Phase Lock Check (VS-69 Board)	283
9-4-4.	Switching Position Adjustment (VS-69 Board)	284

Section	Title	Page
9-5.	Video Block Adjustments	284
9-5-1.	Playback Frequency Characteristics Adjustment (VS-69 Board)	285
9-5-2.	Flying Erase Check (VS-69 Board)	285
9-5-3.	Crystal Oscillator f0 Checking (VS-69 Board)	285
9-5-4.	Y/C Separation Adjustment (VS-69 Board)	286
9-5-5.	IR2 Adjustment (VS-69 Board)	286
9-5-6.	SYNC AGC Adjustment (VS-69 Board)	286
9-5-7.	Emphasis Input Level Adjustment (VS-69 Board)	287
9-5-8.	PB Y Level 1 Adjustment (VS-69 Board)	287
9-5-9.	PB Y Level 2 Adjustment (VS-69 Board)	287
9-5-10.	Y FM Carrier Frequency Adjustment (VS-69 Board)	288
9-5-11.	Y FM Deviation Adjustment (VS-69 Board)	288
9-5-12.	Chroma Emphasis f0 Adjustment (VS-69 Board)	289
9-5-13.	REC C RF Level Adjustment (VS-69 Board)	289
9-5-14.	REC Y Level Adjustment (VS-69 Board)	289
9-5-15.	REC ATF Level Checking (VS-69 Board)	290
9-5-16.	Feedback Chroma Adjustment (CC-52P Board)	290
9-5-17.	Quasi Burst Phase Adjustment (VS-69 Board)	290
9-5-18.	Delay Burst Phase Adjustment (VS-69 Board)	291
9-6.	Audio System Adjustment	292
9-6-1.	AFM Carrier Frequency Adjustment (AU-92P Board)	292
9-6-2.	REC AFM Carrier Level Check (AU-92P Board)	292
9-6-3.	AFM Deviation Adjustment (AU-92P Board)	292
9-6-4.	E-E Output Level Check	293
9-6-5.	Overall Level Characteristics Check	293
9-6-6.	Overall Frequency Characteristics Check	293
9-6-7.	Overall Distortion Check	293
9-6-8.	Overall Noise Level Check	293
9-7.	Arrangement Diagrams for Adjustment Parts	294

There is the color reproduction standard frame at the back of the book.

SERVICE NOTE

[HEAD CLEANING]

After an extended period of use the video image may become indistinct or may not appear at all during playback of a tape. The cause of this usually are dirty video heads. For remedy, cleaning of the heads is required.

Check for Head Clogs During Recording

① Use a blank tape, record a short section, then press the stop button to stop.
② Set to recording mode again.
③ If the [✿] mark is flashing in the viewfinder at this time, head clogs are occurred.

Check During Playback of a Tape

① Play back a pre-recorded tape and display the image on a TV screen.
② If there is no sound and the image is unstable, no image appears on the screen, or tape transport is unstable, head clogs are occurred.

Remedy

[Cleaning method using a cleaning tape]

- Use the Cleaning Tape V8-6CLH. (Please follow the instructions attached to the cleaning tape.)

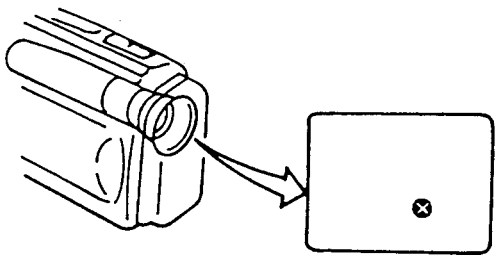

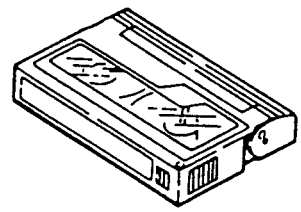

[SEMICONDUCTOR LOCATION]

In this service manual, the mounted locations of the semiconductors (IC, transistor, diodes) are indicated in red sa shown below. This enables to find the location on the board easily when servicing.

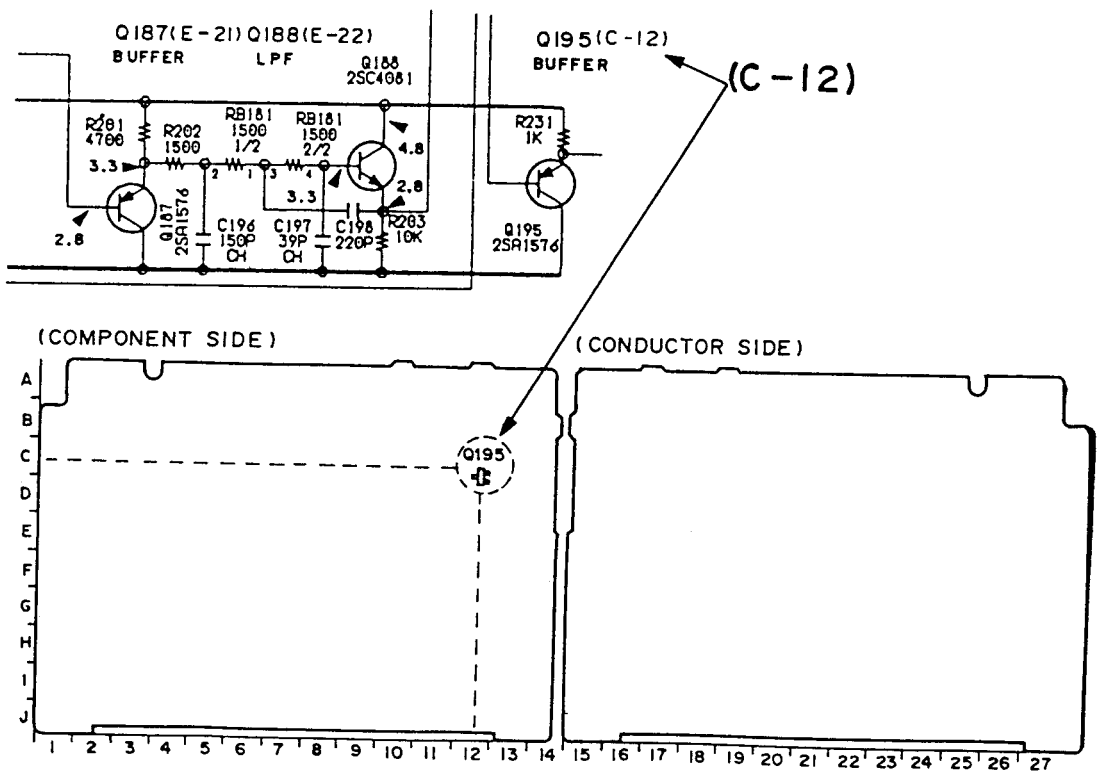

SECTION 1
GENERAL

This section is extracted from instruction manual of AEP and UK model .

Identifying the Parts

(A-1)

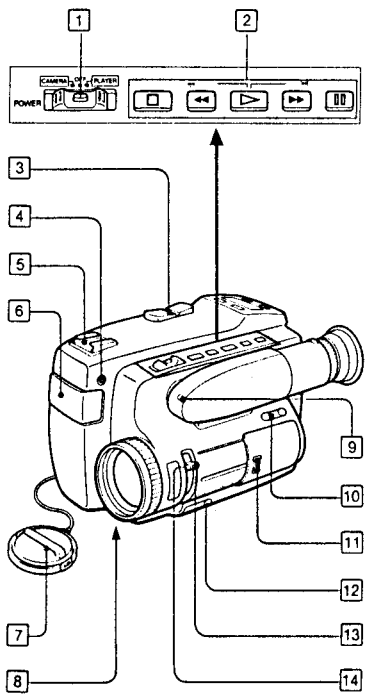

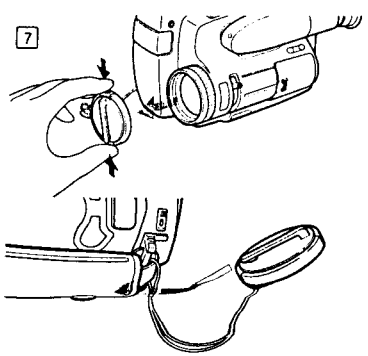

For details on the use of each control, refer to the pages indicated in the circle.

(A-1)

[1] **POWER switch**
CAMERA: For camera recording
PLAYER: For playing back or editing tapes
OFF: Power off

[2] **Tape transport buttons**
▷ (playback)
▶▶ FF (fast forward)
◀◀ REW (rewind)
□ (stop)
▯▯ (pause)

[3] **Power zoom button** ㉖

[4] **MIC jack (PLUG IN POWER)**
Connect an external microphone.
The MIC jack also accepts a "Plug-in-power" microphone and supplies power to it.

[5] **Accessory shoe**
Attach a video light, etc.

[6] **Built-in microphone**

[7] **Lens cap**
To remove the lens cap, squeeze the sides as shown. Clip it on the grip strap.

[8] **FADER button** ㉘

[9] **Camera recording/battery lamp**
Lights during camera recording. It blinks when the battery is exhausted.

[10] **EDITSEARCH button** ㉓–㉕

[11] **AUTO LOCK cover**
For manual adjustment, push the small button and slide the AUTO LOCK cover.

[12] **Lithium battery compartment** ⑯

[13] **Macro set button** ㉗

[14] **Zoom lever** ㉖

(A-2)

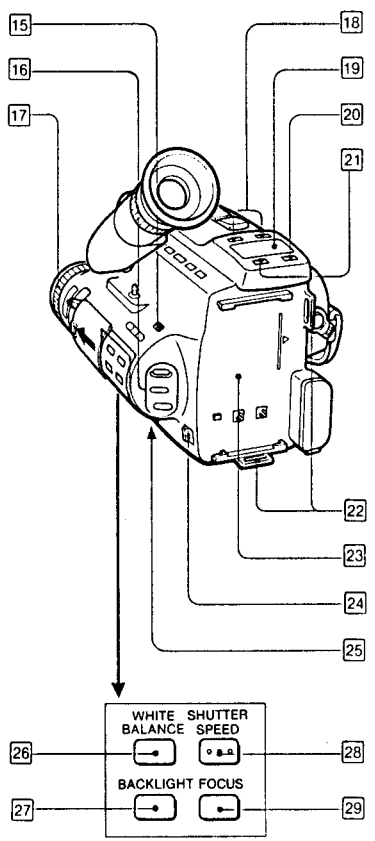

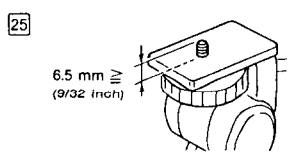

(A-2)

[15] **REC recording MODE/EDIT switch** ㉑, ㊽
Switch it depending on the operating mode.

Mode	Recording	Playback	Editing
Setting	↔ REC MODE EDIT	← EDIT	→ EDIT
Function	Recording mode switch	EDIT switch	

[16] **Superimpose buttons** ㉙
MEMORY button
COLOR/MODE button
SUPERIMPOSE ON/OFF button

[17] **Focus ring** ㉙

[18] **DATE and TIME buttons**
Press to display or turn off the date or time.

[19] **Display window**

[20] **ZERO MEM (zero memory) button** ㉕, ㊽
Use to memorize the counter zero point.

[21] **RESET button** ㉔, ㊾
Press to reset the counter to zero.

[22] **Hooks for shoulder strap**
Attach the shoulder strap.

[23] **Battery mounting surface**

[24] **BATT (Battery eject) knob** ⑪

[25] **Tripod receptacle**
Note when attaching a tripod not manufactured by Sony, the length of the camera mounting screw must be less than 6.5 mm. Otherwise the screw may damage the inner parts of the camera.

[26] **WHITE BALANCE button** ㉛

[27] **BACK LIGHT button** ㉜

[28] **SHUTTER SPEED button** ㉞
Used to select the shutter speed.

[29] **FOCUS button**
Used for manual focusing.

(A-3)

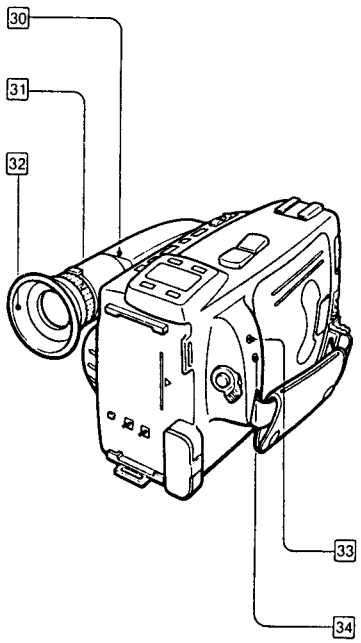

(A-3)

30 **Viewfinder**
The picture being recorded or played back can be monitored in monochrome here. Also marks such as the caution indicators and function modes appear in here.

31 **Viewfinder lens adjustment ring**
Adjust to your eyesight to assure good focus. Be sure to adjust this ring when shooting for the first time.

32 **Eyecup**

33 **REMOTE control jack (stereo mini-mini-jack)**
Connect a wired remote control unit, an editing controller, or other equipment here.

34 **(earphone) jack (mini-jack)**

About (LANC)
stands for Local Application Control Bus System. The connector is used for controlling the tape transport of video equipment and the peripherals connected to it. This connector has the same function as the connectors indicated as CONTROL L or REMOTE.

(A-4)

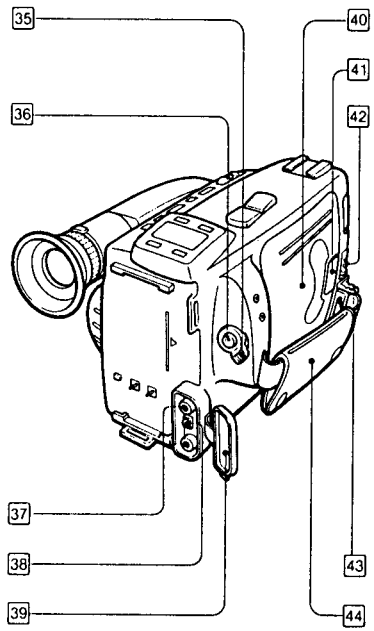

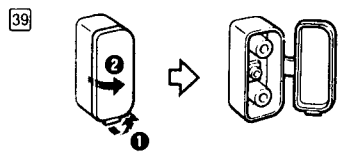

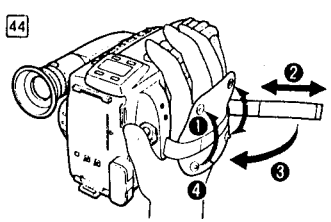

(A-4)

35 **STANDBY switch**
Turn to STANDBY to set the camcorder to the standby mode.

36 **START/STOP button**
Press to start and stop camera recording.

37 **V/A (video/audio) output jacks (phono jacks)**

38 **RFU DC OUT (RFU adaptor DC output) jack (special minijack)**
Attach the supplied RFU adaptor here if necessary.

39 **Jack cover**
Open the cover as shown in the illustration. Even if the cover is detached, it can be attached again.

40 **Cassette holder**

41 **PUSH CLOSE button**
Push to close the cassette holder.

42 **EJECT (cassette eject) button**

43 **Strap release knob**

44 **Grip strap**
Adjust the length so that your thumb can easily manipulate the START/STOP button.

Identifying the Parts

(A-5)

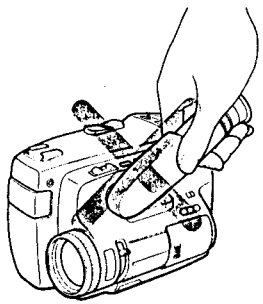

Caution (A-5)
Do not pick up the unit as shown in the illustration.

(A-6)

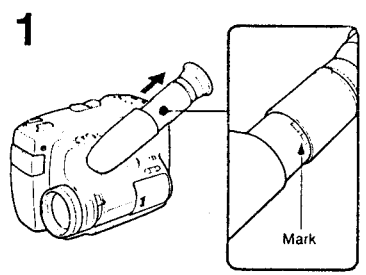

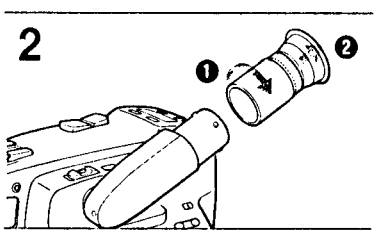

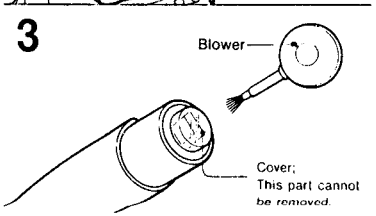

To remove dust from inside the viewfinder (A-6)

1 **Pull out until the mark appears.**

2 **Turn as illustrated until it stops and pull out.**

3 **Clean the surface of the cover with a blower.**

Connecting the Power Sources

First, Choose the Power Source.

Place	Power source	Accessory to be used
Outdoors	Battery pack	Battery pack NP-55 (supplied), NP-66H, NP-77, NP-77H
	Alkaline batteries	Battery case EBP-TR, EBP-55, EBP-77
Indoors	House current	AC power adaptor AC-V35A (supplied), AC-V55
In the car	12V or 24V car battery	DC pack DCP-77, DCP-55 (DCC-16B car battery cord supplied)

Note on power source
- Disconnecting the power source or removing the battery pack during recording or playback may damage the inserted tape. If disconnected accidently supply the power again immediately.

(B-1)

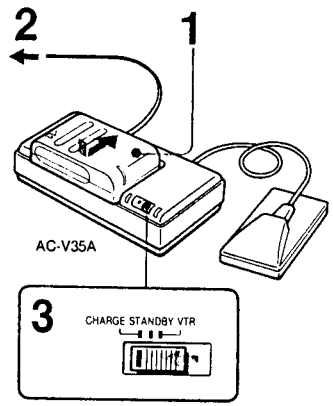

(B-2)

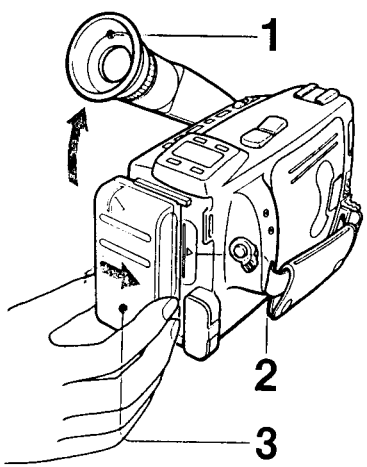

Using the Battery Pack

Step 1

Charge the battery pack. (B-1)

1 Align the right side of the battery pack with the line on the AC power adaptor and slide in the battery pack to the right.

2 Connect the AC power adaptor to a wall outlet.

3 Set CHARGE/VTR to CHARGE. Charging begins.

Required charging time

NP-55 (supplied)	NP-66H	NP-77	NP-77H
60	100	120	140

Approximate minutes when using AC-V35A.

See the instruction manual of the AC power adaptor for details.

Step 2

Mount the battery pack on the camcorder. (B-2)

1 Lift up the viewfinder.

2 Align the right side of the battery pack with the line on the camcorder.

3 Slide the battery pack to the right.

Note

Make sure the battery fits completely on the mounting surface of the camcorder. Imperfect fit may damage the projections on the camcorder.

(B-3)

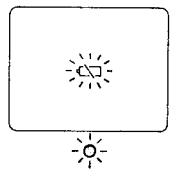

(B-4)

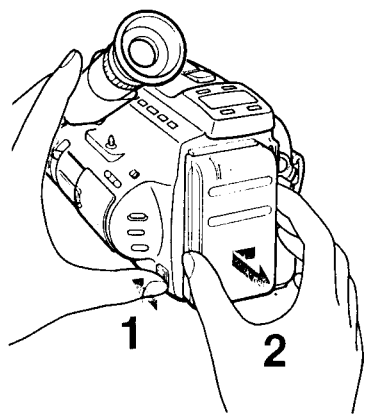

Battery life

A fully charged battery pack lasts for:

NP-55*	NP-66H	NP-77	NP-77H
60	100	120	140

(Approx. minutes, continuous recording when used indoors)

* Supplied

When the battery becomes weak (B-3)

The ⌧ indication and red lamp blink slowly in the viewfinder. Replace the battery pack with a fully charged one, when they blink rapidly.

To remove the battery pack (B-4)

While pressing the BATT knob in the direction of arrow, slide to the left and pull out the battery pack as illustrated.

Other options for charging

- AC-V55 AC power adaptor: You can charge two battery packs one after another.
- BC-55 portable battery charger: You can charge a battery pack on 100—240 V AC.
- DC-V30 car battery charger: You can charge a battery by connecting the car battery charger to the cigarette lighter socket. This battery charger can also supply power for Sony 8 mm video equipment that operates on a battery pack.
- NP-4000 rechargeable battery pack: You can use it for long outdoor recording. The DCP-55 DC pack is required for the connection (not supplied).

(B-5)

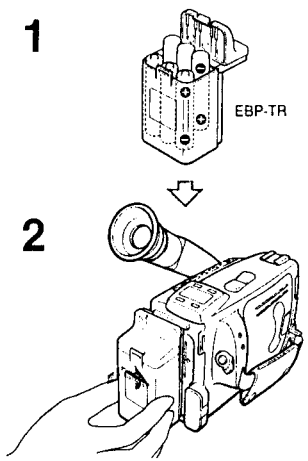

(B-6)

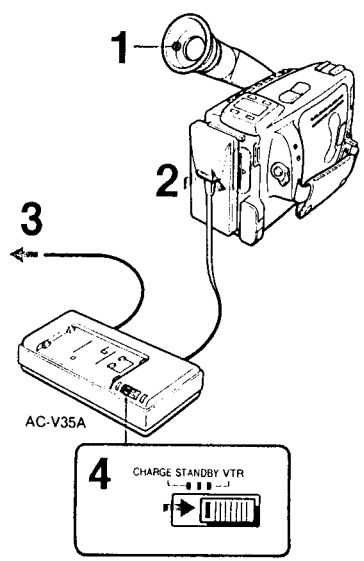

Using Alkaline Batteries

(B-5)

The EBP-TR battery case is required (not supplied.)

1 **Insert 6 R6 (size AA) alkaline batteries into the battery case.**

2 **Attach the case in the same way as the battery pack.**

Battery life

	Minutes
EBP-TR	Approx. 60
EBP-55*	Approx. 60
EBP-77*	Approx. 180

(Using Sony alkaline batteries, continuous recording when operated indoors)
*See "Other option" below.

Notes on battery life
- Batteries will not last as long in cold place.
- No indication appears in the viewfinder when the batteries are weak.

Notes on using the EBP-TR
For your safety, make sure you remove the case from the camcorder when you are replacing the batteries.

Other options
- EBP-55 (6 R6 (size AA) alkaline batteries)
- EBP-77 (12 R6 (size AA) alkaline batteries)

Using House Current

(B-6)

Use the supplied AC-V35A AC power adaptor.

1 **Lift up the viewfinder.**

2 **Align the right side of the connecting plate with the line on the camcorder, and slide it in to the right.**

3 **Connect the AC power adaptor to a wall outlet.**

4 **Set CHARGE/VTR to VTR.**

We recommend the use of the AC power adaptor while viewing the playback picture on the TV, editing tapes or recording a TV program, as you do not need to worry about running out of power.
See the instruction manual of the AC power adaptor for details.

Other option
The AC-V55 AC power adaptor can also be used.

(B-7)

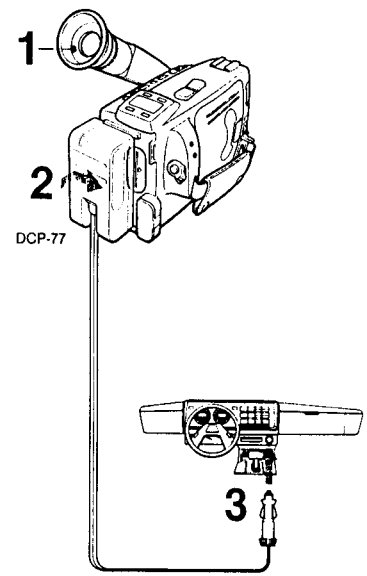

Using Car Battery

(B-7)

The DCP-77 DC pack is required (not supplied).

1 **Lift up the viewfinder.**

2 **Align the right side of the DC pack with the line on the camcorder, and slide it in to the right.**

3 **Connect the cord to the cigarette lighter socket of a car (12V or 24V).**

To remove the DC pack
While pressing the BATT knob on the camcorder, slide the DC pack to the left and pull it out.

Other options
- The AC-V55 AC power adaptor and the DCC-16AE car battery cord can also be used to operate this camcorder on a 12V or 24V car battery.
- DCP-55 DC pack can also be used to operate this camcorder on a 12V or 24V car battery.

(C-1)

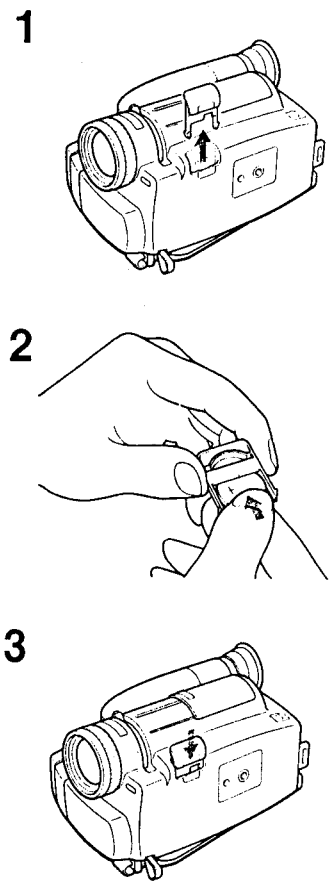

Setting the Date and Time

Inserting the Lithium Battery

(C-1)

This camcorder uses a lithium battery to activate the clock and to keep titles in memory. Before operating it for the first time, install the supplied lithium battery.

1 **Pull out the lithium battery holder from the bottom of the camcorder.**

2 **Install the supplied CR2025 lithium battery with the + side facing the (+) on the battery holder.**

3 **Put the lithium battery holder back into the camcorder.**

To change the lithium battery
Remove the lithium battery holder from the camcorder, and pull out the lithium battery and insert a new one.

Note on battery life
The battery lasts for approximately 1 year under normal operation. When the lithium battery becomes weak, the time indication keeps blinking in the display window and blinks in the viewfinder for about 5 seconds when the POWER switch is set to CAMERA. When this happens, **replace the battery with a Sony CR2025 lithium battery. Use of another battery may present a risk of fire or explosion.** While replacing the lithium battery, keep the battery pack or other power source attached. If the battery pack or other power source was not attached while replacing, readjustment of the date and time is necessary.

Cautions
- Keep the lithium battery out of the reach of children.
  Should the battery be swallowed, consult a doctor immediately.
- Wipe the battery with a dry cloth to assure good contact.
- Be sure to install the battery with the correct polarity.
- Do not hold the battery with metallic tweezers, as a short-circuit may occur.
- Battery may explode if mistreated. Do not recharge, disassemble, or dispose of in a fire.

(C-2)

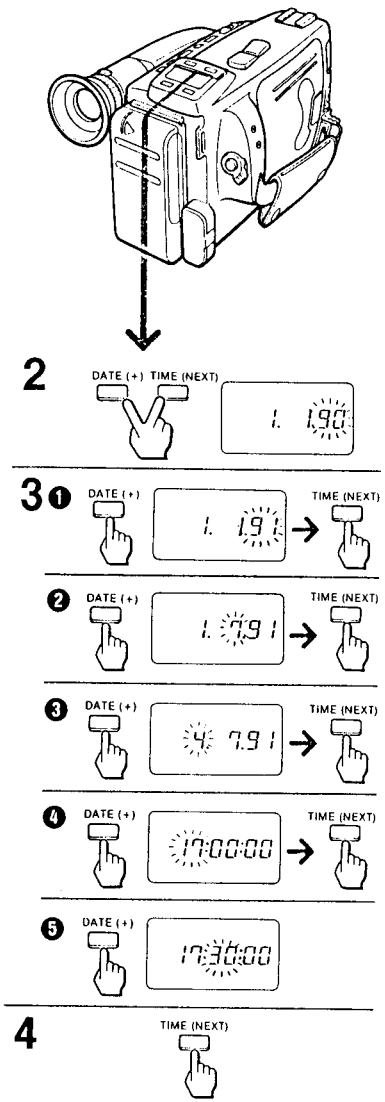

Setting the Date and Time

(C-2)

1 **Make sure that a power source is connected, set POWER to CAMERA, and turn STANDBY to STANDBY.**

2 **Press DATE and TIME simultaneously for more than 3 seconds until the date indication appears in the display window. DATE now functions as + (to advance numbers) and TIME functions as NEXT (to execute).**

3 **Set the year, month, day, hour and minute, in this order.**
First adjust the blinking digits with + and then press NEXT.

4 **Press NEXT to set the second.**
The clock starts operating.

To correct the date and time setting
Repeat steps 2 to 4.

To advance the digits faster
Keep + pressed.

To check the preset date and time
Press DATE or TIME. When you press the same button again, the indication goes off.

(D-1)

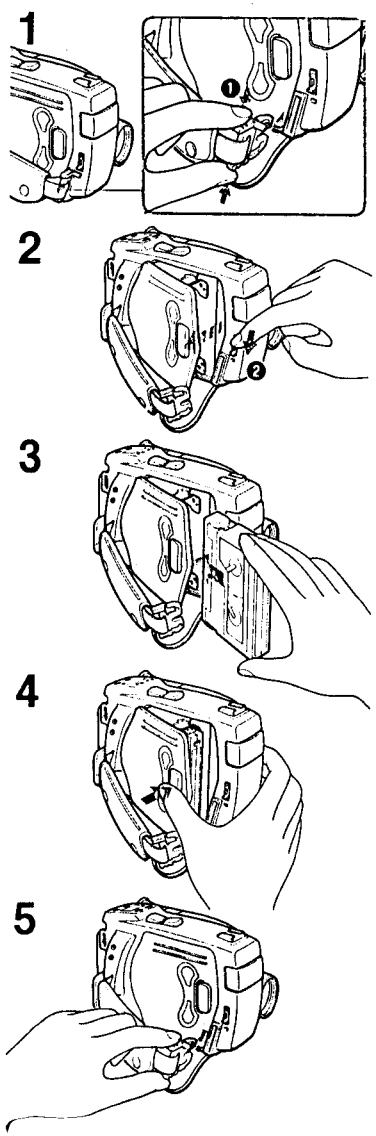

Inserting a Tape

Inserting a Tape

(D-1)

Make sure a power source is connected.

1 Remove the grip strap.

2 While pressing the blue button, press EJECT.
The cassette holder will open toward you.

3 Insert the cassette with window facing out.

4 Press PUSH CLOSE on the cassette holder to close it.

5 Attach the grip strap.

Ejecting the Tape

Make sure that a power source is connected.

1 Remove the grip strap.

2 While pressing the blue button, press EJECT.
The cassette holder will open toward you.

3 Take out the cassette and press PUSH CLOSE on the cassette holder to close it.

4 Attach the grip strap.

(D-2)

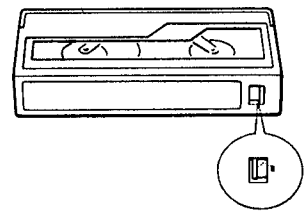

Preventing Accidental Erasure

(D-2)

Slide out the red tab on the cassette to protect the recording.
To re-record on this tape, slide the tab back in.

Notes on handling tapes

- Never insert anything in the small holes on the rear of the cassette. These holes are used to sense the type of tape, thickness of tape, or if the tab is out or in, etc.
- Store tapes in their cases and keep them in an upright position to prevent intrusion of dust and uneven winding.

(N-1)

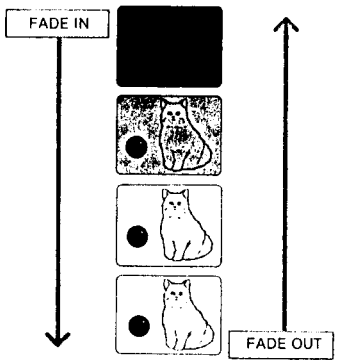

(N-2)

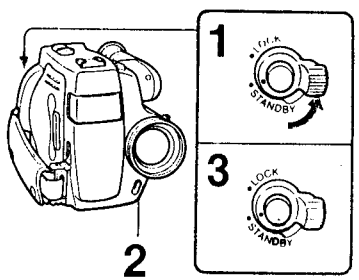

(N-3)

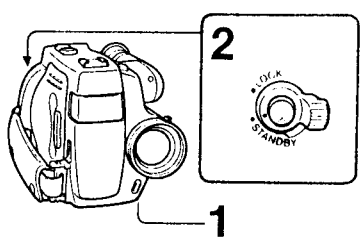

Fade-in and Fade-out

When fading-in, the picture will gradually appear from a black screen. The sound will also gradually increase.
When fading-out, the picture will gradually disappear to a black screen. The sound will also gradually decrease.
This function will give your recording a professional appearance. **(N-1)**

To Fade-In

(N-2)

1 **Turn STANDBY to STANDBY to set the camcorder in the standby mode.**

2 **Press FADER.**
The "FADER" indication appears in the viewfinder.

3 **Press START/STOP.**
Fade-in is performed and then recording will start.

To Fade-out

(N-3)

1 **While recording, press FADER.**
The "FADER" indication appears in the viewfinder.

2 **Press START/STOP to stop the recording.**
Fade-out is performed and then recording stops.

To cancel the fade-in/fade-out function before it is performed
Press FADER again before pressing START/STOP.

If you want to use the fade-in/fade-out function repeatedly
Start from step 1 each time.

When the date is displayed
The date and title do not fade-in or fade-out.

(O-1)

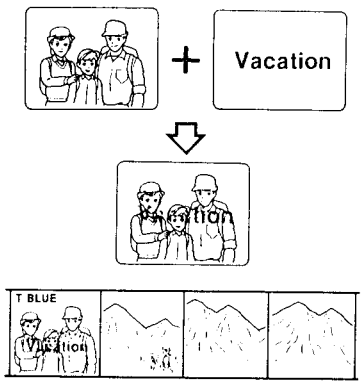

(O-2)

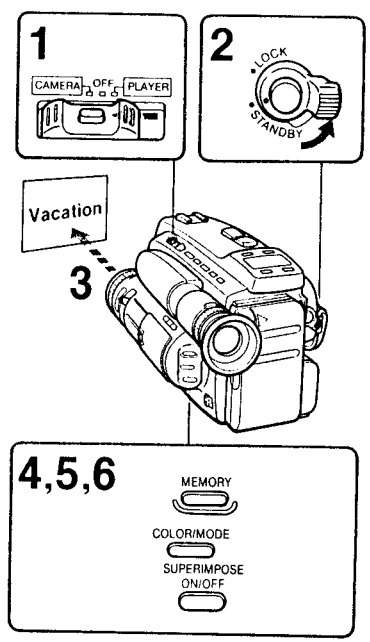

Recording a Title

You can superimpose your own hand-lettered message or illustration over the picture during recording. **(O-1)**

- One title can be stored
- The colour of the title can be selected from 8 colours.

To make a desired title card, use a plain, white card and write a title using a dark colour and thick lines.

Before recording, store the title or illustration.

Storing a Title

(O-2)

Make sure that the lithium battery is installed.

1 **While pressing the green button, set POWER to CAMERA.**

2 **Turn STANDBY to STANDBY to set the camcorder in the standby mode.**

3 **Point the camcorder to the title card and adjust the focus.**
To focus the subject, use the close-up function if necessary.

4 **Press MEMORY to store the title.**

5 **Press COLOR/MODE and select the title colour.**
Each time you press the button the indication changes as follows.

WHT (white) → BLUE → GRN (green) → CYAN
↑ ↓
BLK (black) ← YEL (yellow) ← VIO (violet) ← RED

6 **Press SUPERIMPOSE ON/OFF to turn off the title.**

To check the title
Press SUPERIMPOSE ON/OFF in the standby mode. To turn off the title, press the button again.

About memory back up
The camcorder uses a lithium battery (located on the bottom of the unit) to keep the title in memory. On lithium battery life, see page 16.

(O-3)

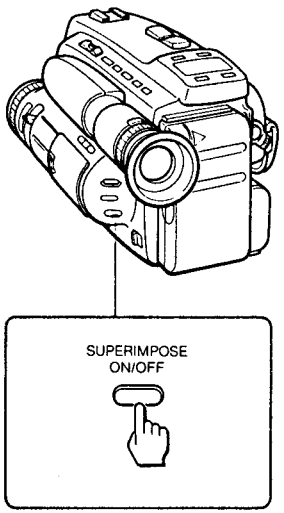

Recording a Title

Superimposing the Title on a Picture

(O-3)

1 **During recording, press SUPERIMPOSE ON/OFF at the point from which you want to insert the title.**
The title is displayed. During recording, the title is recorded.

2 **Wait for a while and at the point you want to turn off the title, press SUPERIMPOSE ON/OFF again.**
The title goes out.

When recording the title at the beginning
We recommend the following method:

1 **Set the camcorder in the standby mode.**

2 **Press SUPERIMPOSE ON/OFF.**

3 **Start recording with the title displayed in the viewfinder.**

4 **Wait for a while and at the point you want to turn off the title, press SUPERIMPOSE ON/OFF again.**

About the colour indication
- The colour indication in the viewfinder is not recorded.
- You can change the title colour by pressing COLOR/MODE even after displaying the title.

(O-4)

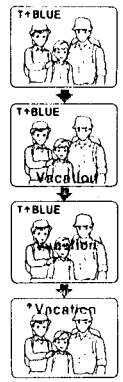

(O-5)

(O-6)

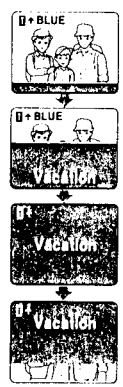

(O-7)

Recording a Title

Various Display Modes of the Title

Display mode	Indication in the viewfinder
Scrolling up the title (O-4) The title scrolls up.	↑
Reversing the title with the picture (O-5)	T
Scrolling up the reversed title (O-6)	T↑
Normal display mode	No indication

Selecting the display mode
Before displaying the title, press COLOR/MODE until the indication of the mode you want appears. **(O-7)**

After selecting the mode
Follow the procedure on page 40 to superimpose the title on the picture in that mode.

Recording a Title

(O-8)

COLOR/MODE

Function of the COLOR/MODE button

This button has a double function: one is to select the title colour and the other is to select the title display mode. Its function depends on whether the title is displayed or not. **(O-8)**

To select the colour

1 **Press SUPERIMPOSE ON/OFF to display the title.**

2 **Press COLOR/MODE.**
Each time you press the button, the colour indication changes as follows.

WHT (white) → BLUE → GRN (green) → CYAN
↑ ↓
BLK (black) ← YEL (yellow) ← VIO (violet) ← RED

To select the mode

1 **If the title is displayed, press SUPERIMPOSE ON/OFF so that the title disappears.**

2 **Press COLOR/MODE.**
Each time you press the button, the mode indication changs as follows.

No indication (no title mode) → ↑ → T → T↑
↑_____________________|

↑: Title scroll up mode
T: Title reverse mode
T↑: Title reverse and scroll up mode

Indications Inside the Viewfinder and the Display Window

(V-1)

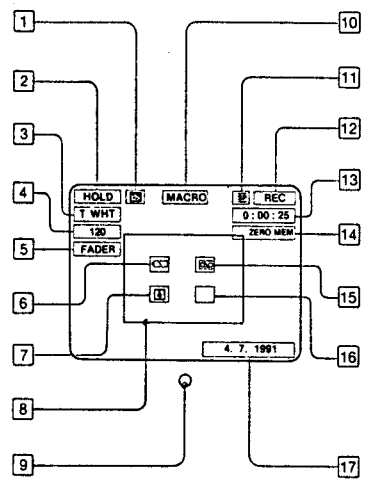

(V-2)

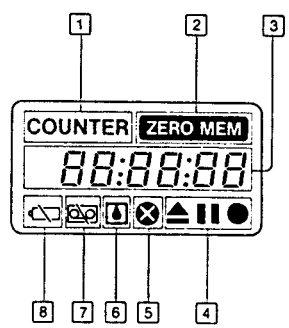

Inside the Viewfinder

(V-1)

1 BACK LIGHT is pressed.
2 White balance mode (☀/☼/HOLD)
3 Title mode
4 Shutter speed
5 FADER is pressed.
6 "Replace battery."
7 Moisture condensation.
8 Auto focus adjusting range
Goes out during manual focusing
9 Shows up during recording.
When blinking: "Replace battery."
10 In the MACRO range
11 Recording/Playback mode (LP/SP)
12 Tape transport and camera recording mode
13 Tape counter
14 ZERO MEM is pressed.
15 "Exchange tape."
16 "Clean video heads." or other caution (⊗, ≙)
17 Date or time

Display window

(V-2)

1 Tape counter.
2 ZERO MEM is pressed.
3 Date or time/tape counter
4 Tape transport
5 Caution
6 Moisture condensation
7 Exchange tape
8 Replace battery

SECTION 2
DISASSEMBLY

2-1. REMOVAL OF CASSETTE LID BLOCK ASSEMBLY

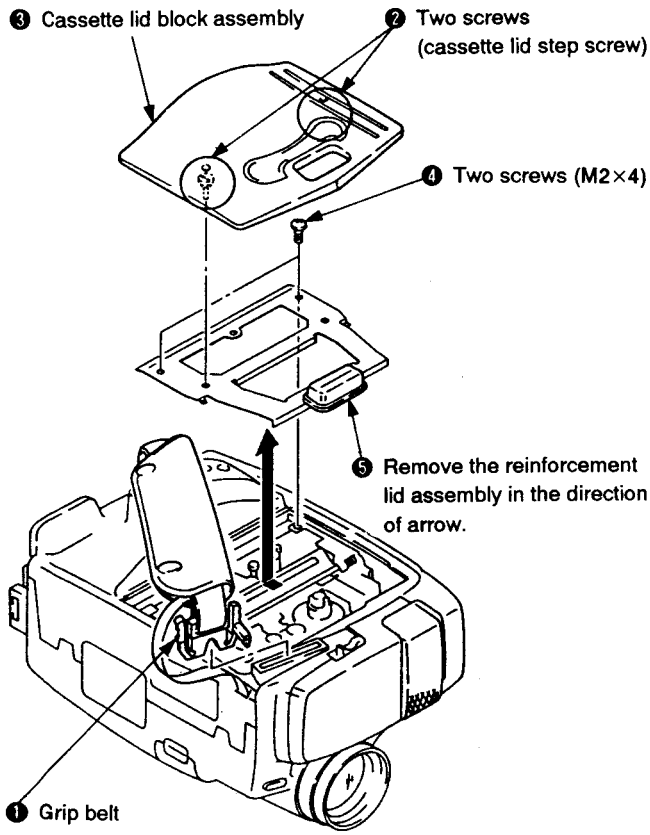

2-2. REMOVAL OF CABINET (TOP) ASSEMBLY

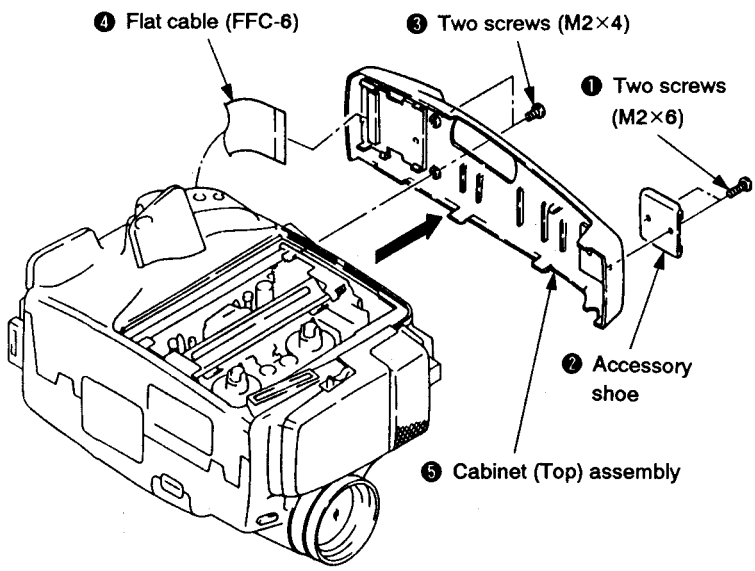

2-3. REMOVAL OF CABINET (FRONT) ASSEMBLY

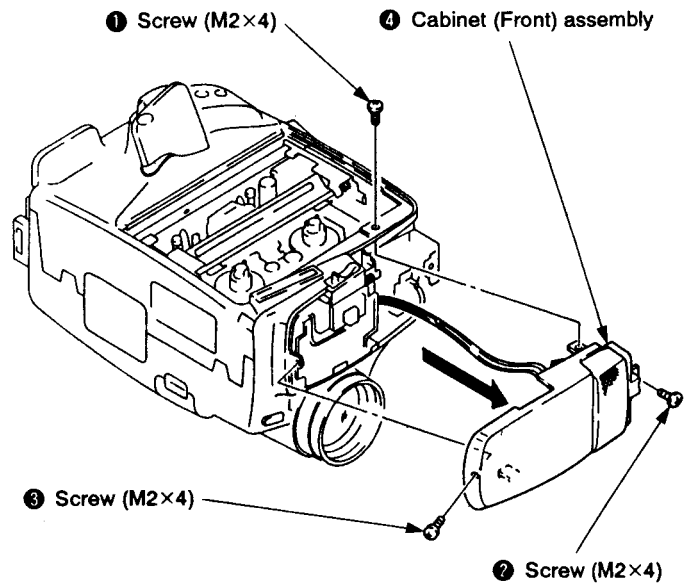

2-4. REMOVAL OF CABINET (LEFT) BLOCK ASSEMBLY

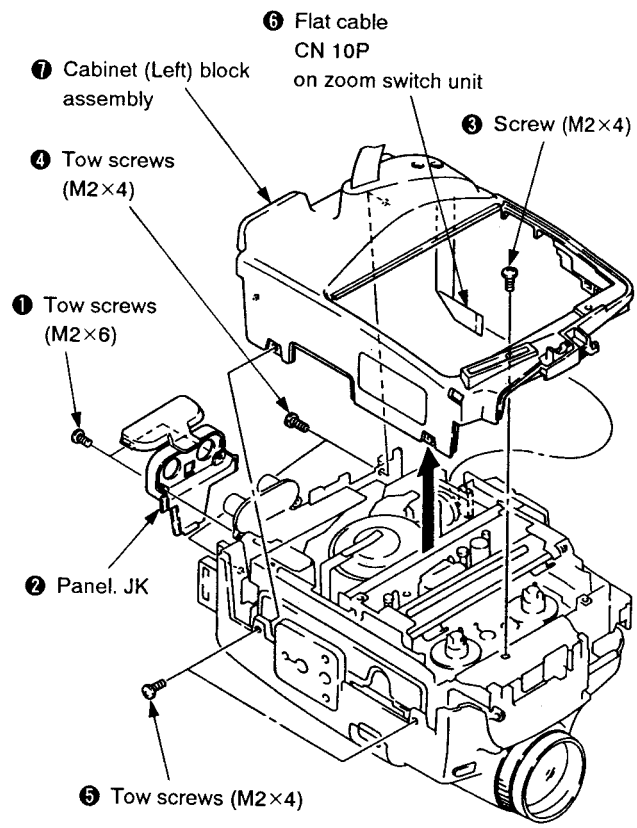

2-5. REMOVAL OF VTR AND CAMERA BLOCK

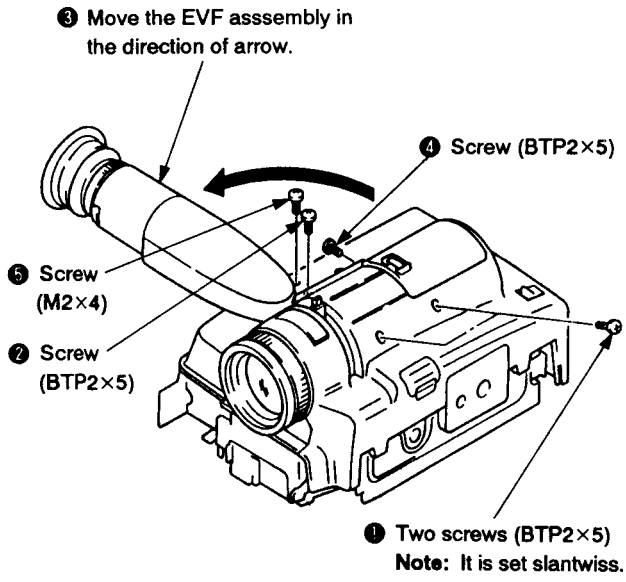

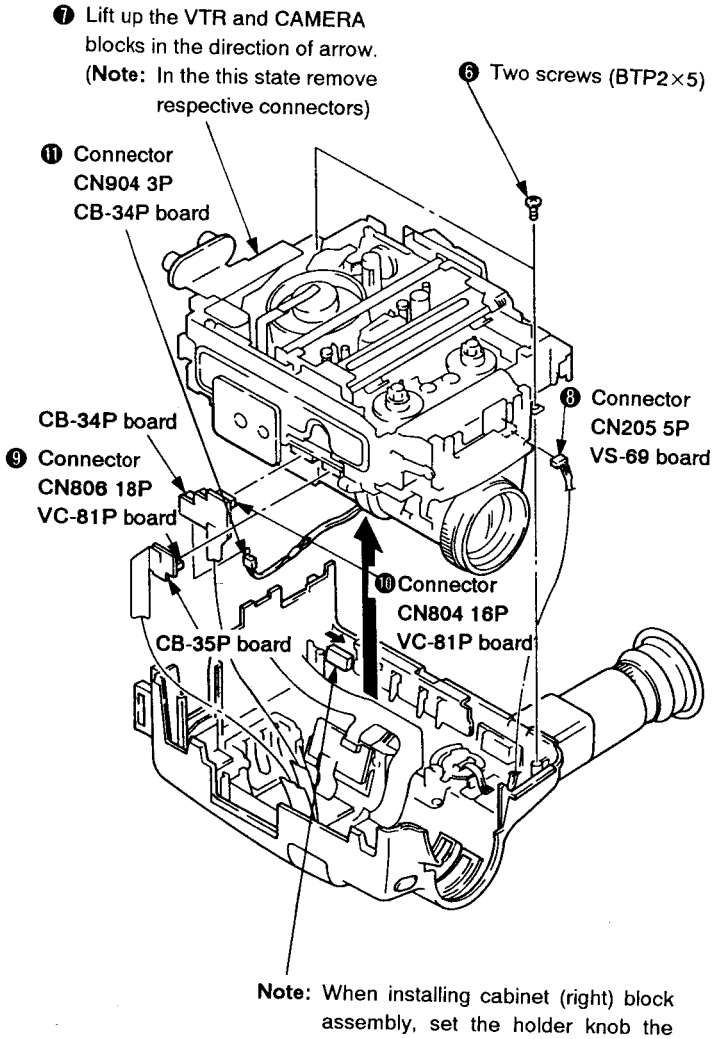

2-6. REMOVAL OF CF-23P BOARD, CF-24P BOARD, CF-25P BOARD AND JC-10P BOARD

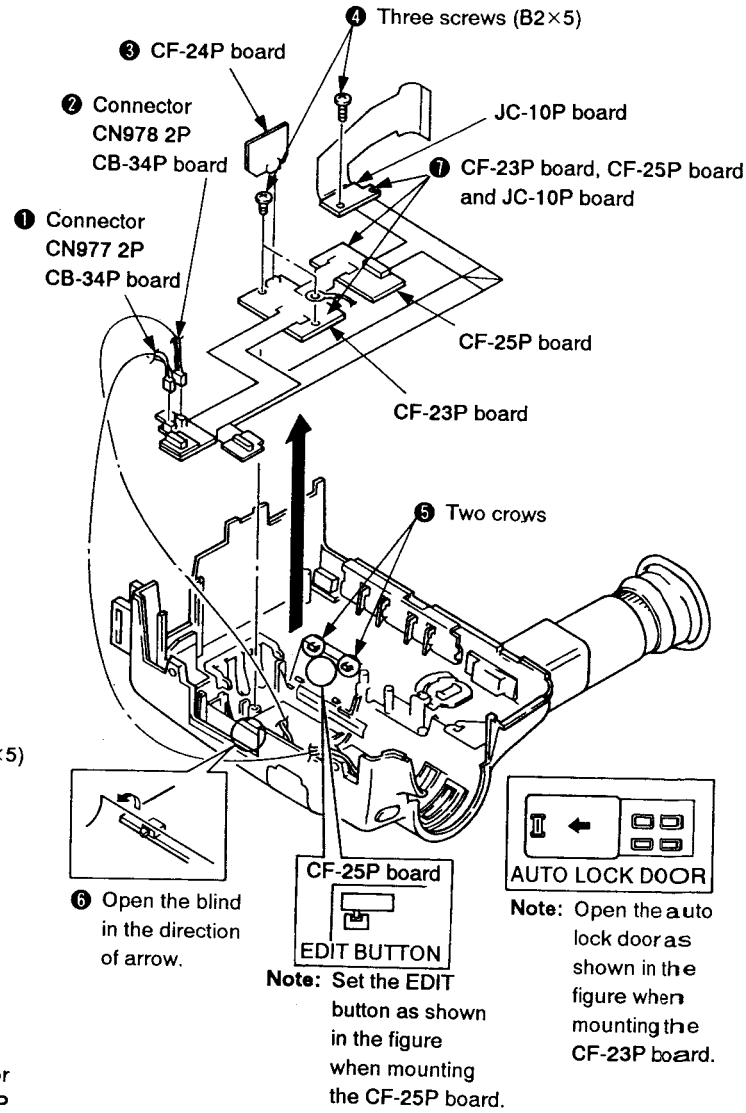

2-7. REMOVAL OF PIN JACK ASSEMBLY

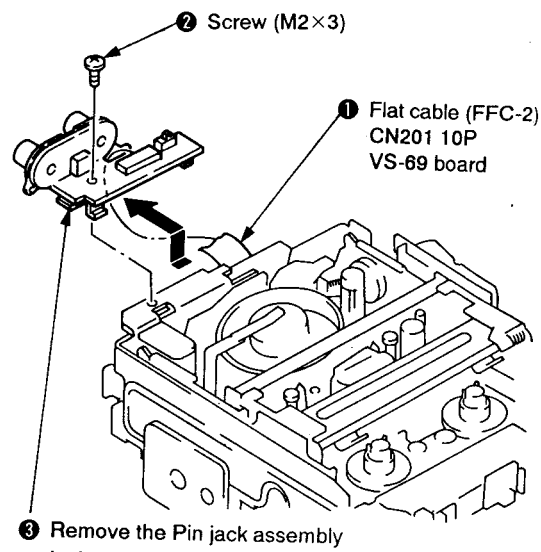

2-8. REMOVAL OF DC-DC CONVERTER UNIT

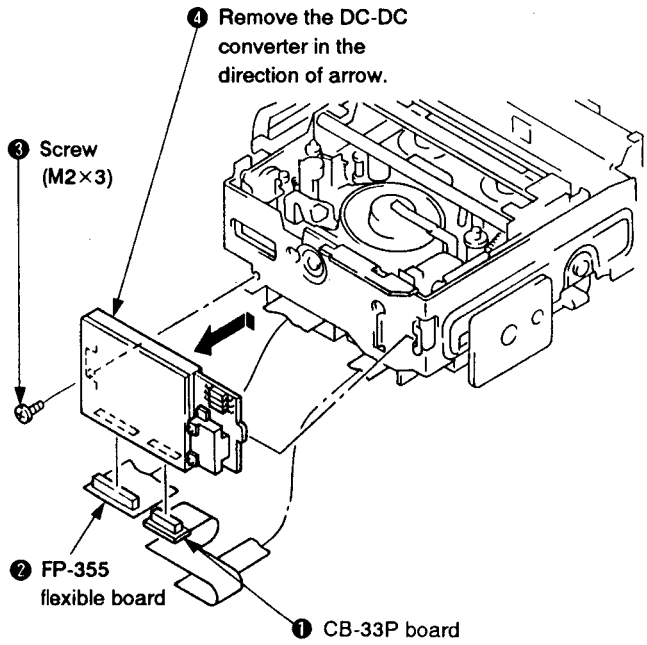

2-9. REMOVAL OF CAMERA BLOCK

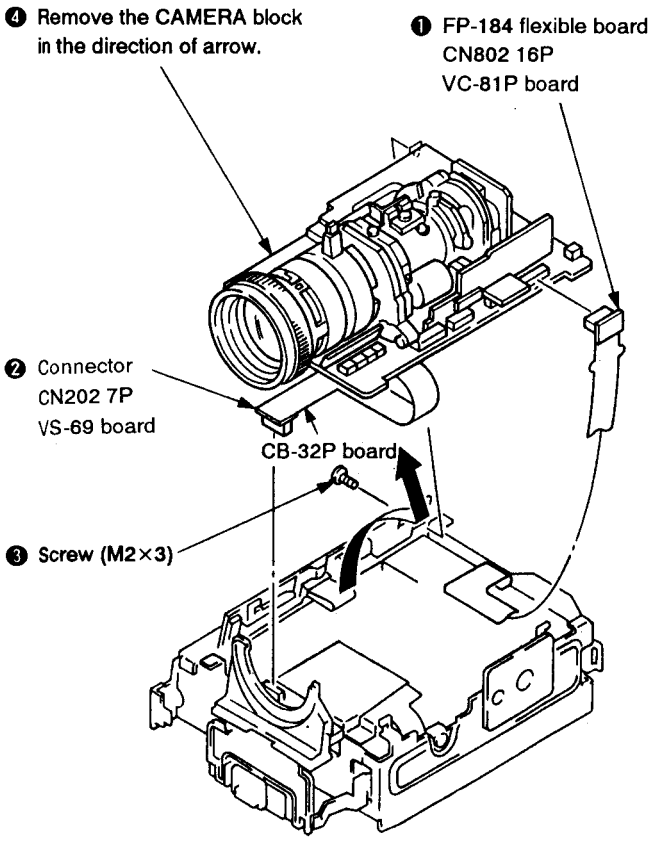

2-10. REMOVAL OF LENS ASSEMBLY

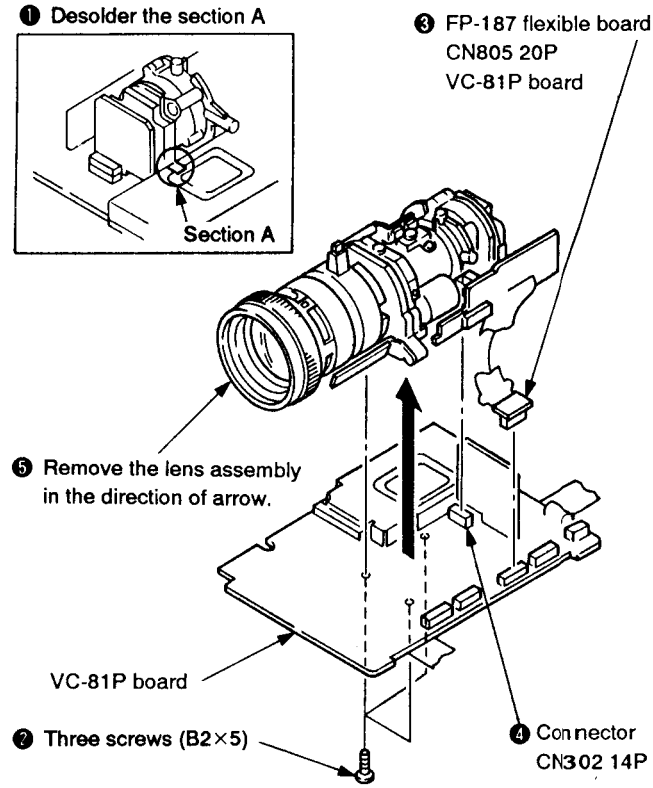

2-11. REMOVAL OF AU-92P BOARD

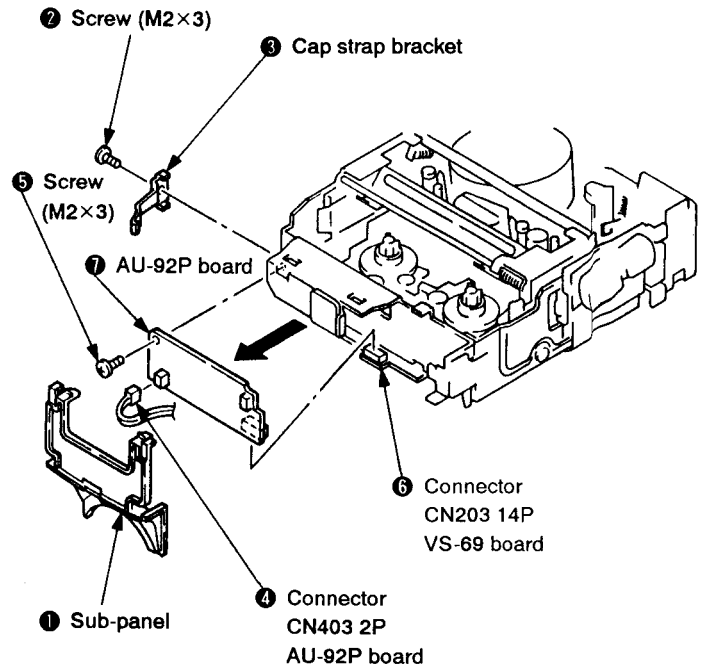

2-12. REMOVAL OF FK-41P AND PUSH SWITCH

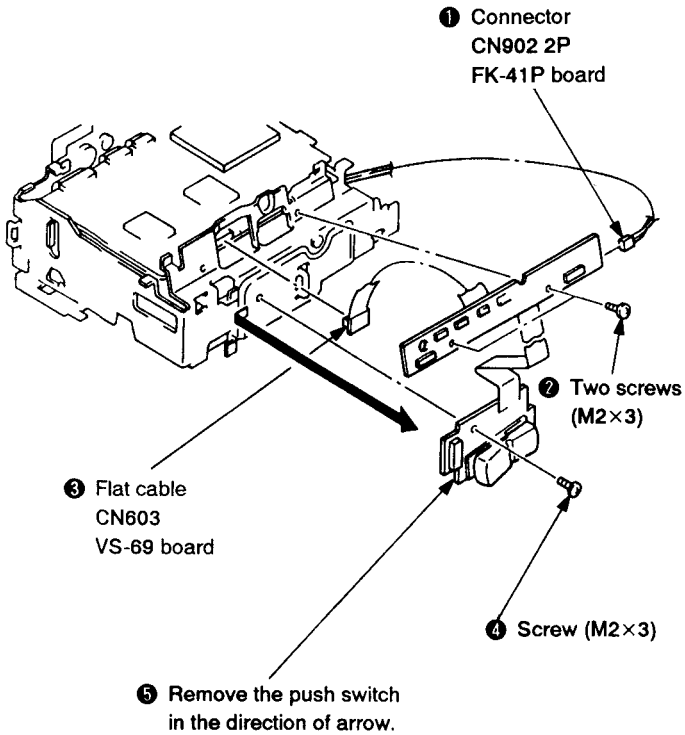

2-13. REMOVAL OF VS-69 BOARD

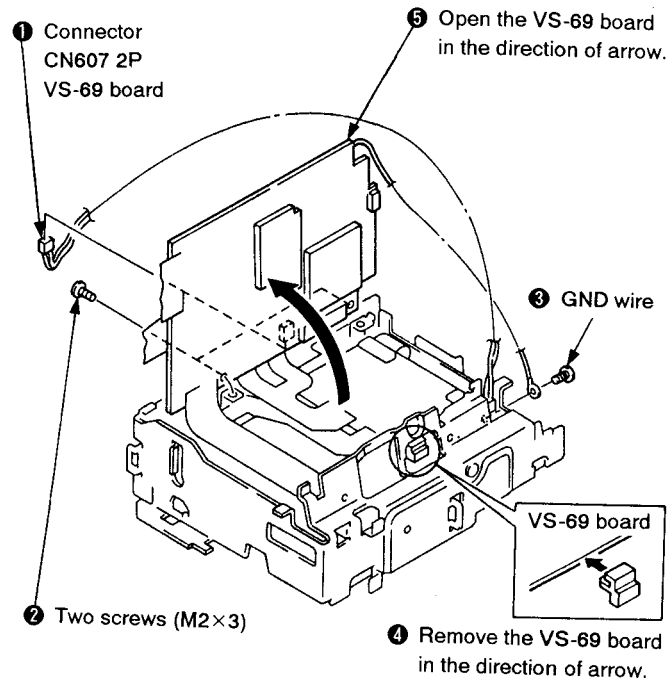

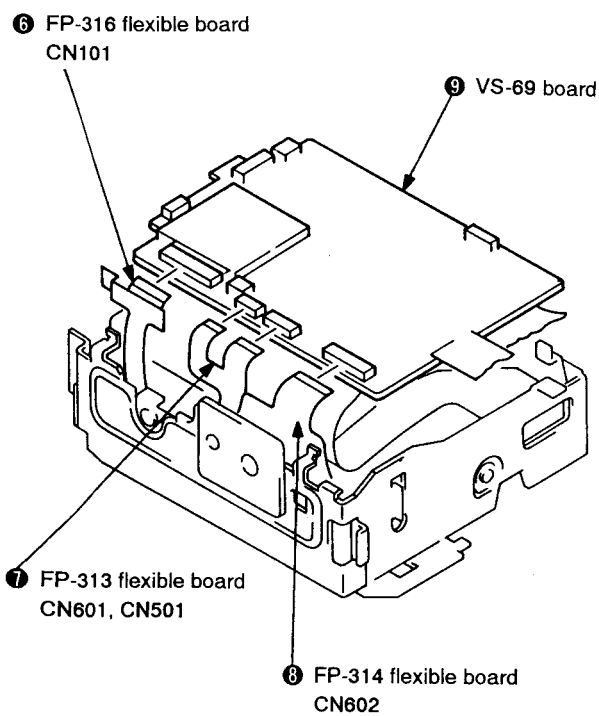

2-14. REMOVAL OF CC-52P BOARD

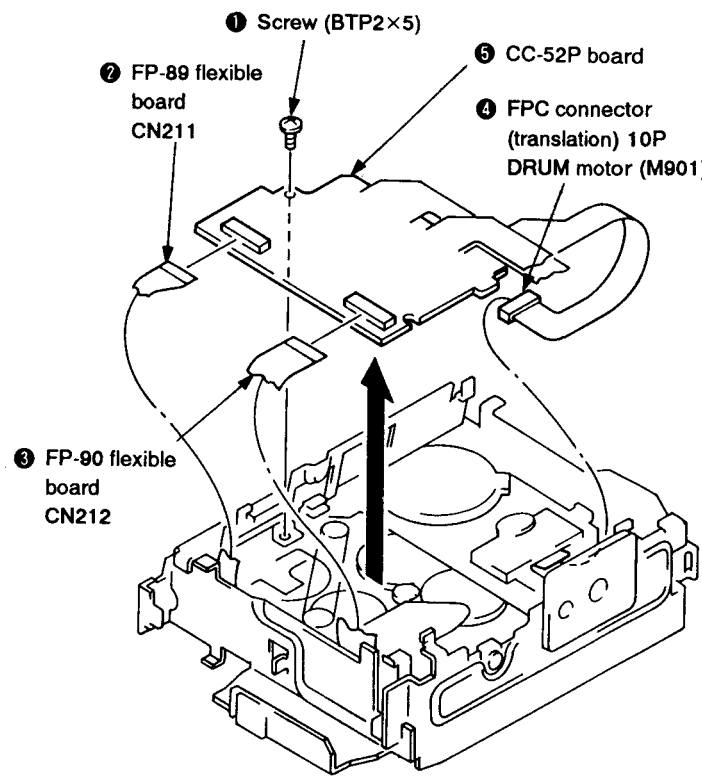

2-15. REMOVAL OF MD BLOCK

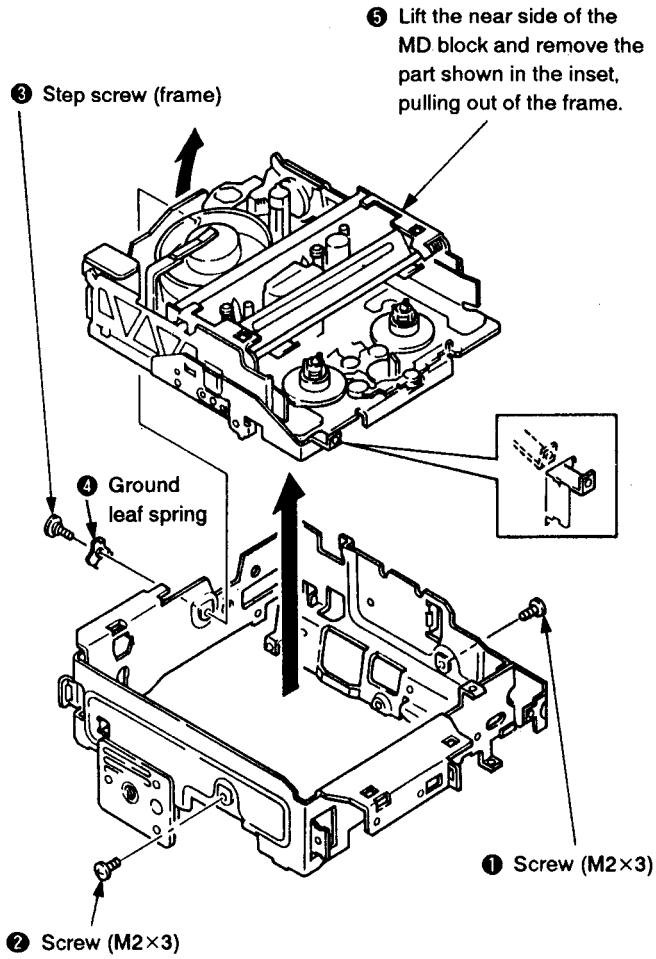

2-16. REMOVAL OF CASSETTE COMPARTMENT ASSEMBLY

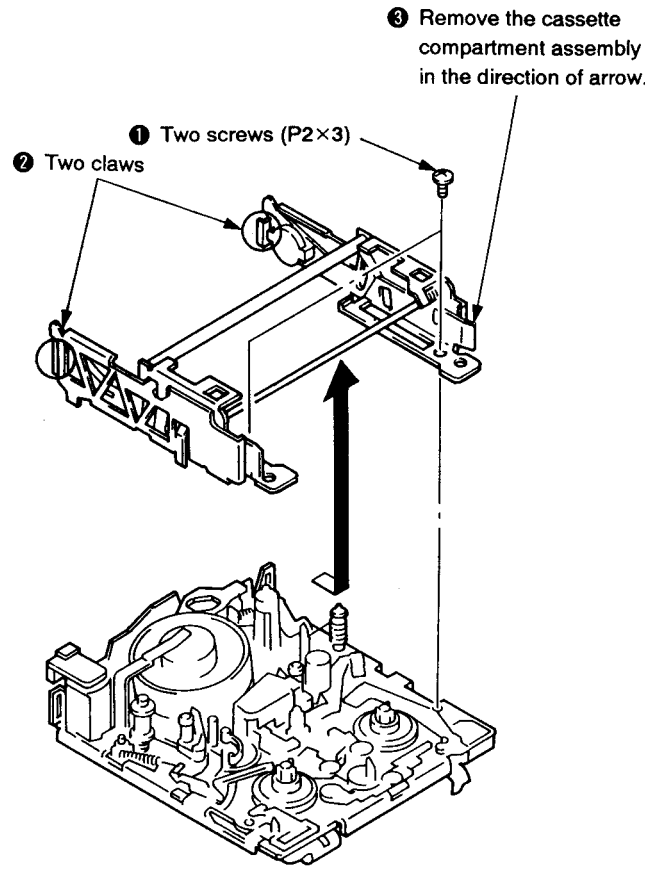

2-17. REMOVAL OF EVF ASSEMBLY

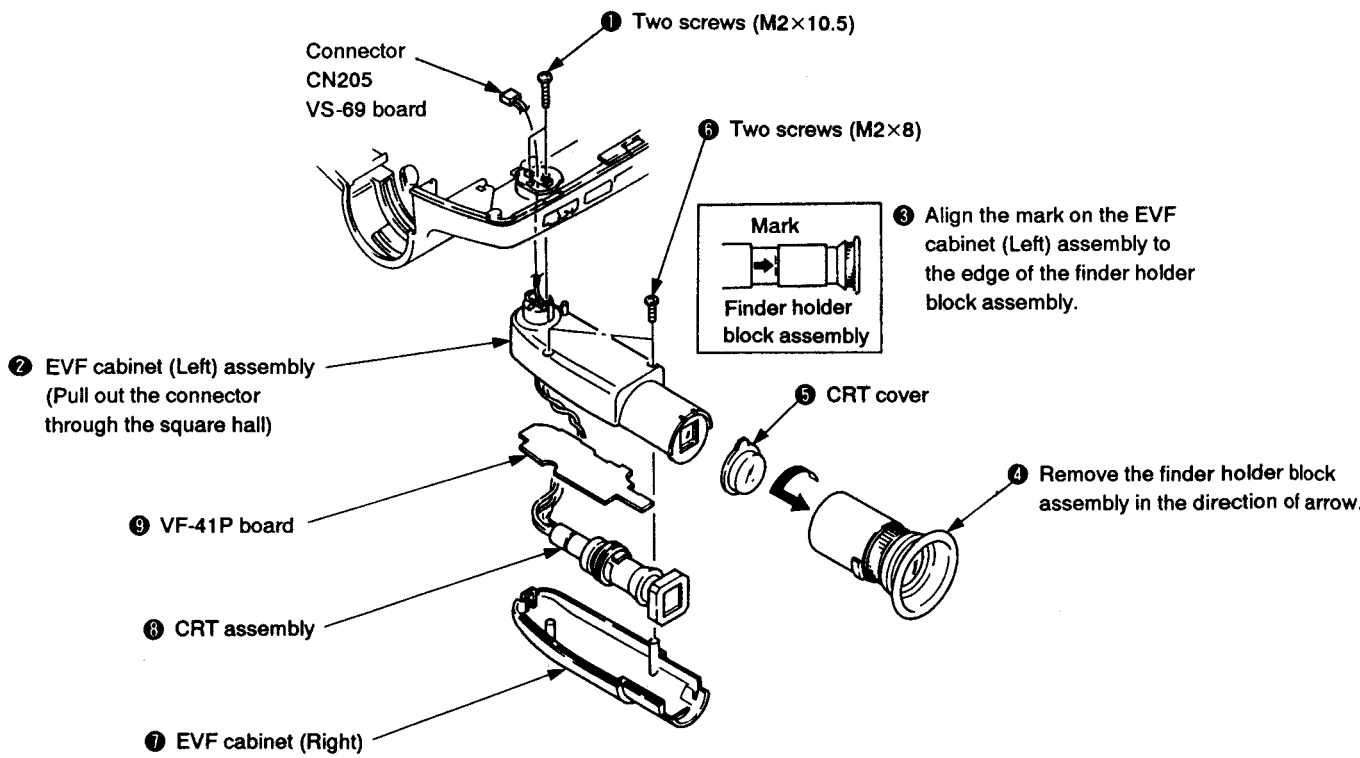

2-18. INTERNAL VIEW

– Right Side –

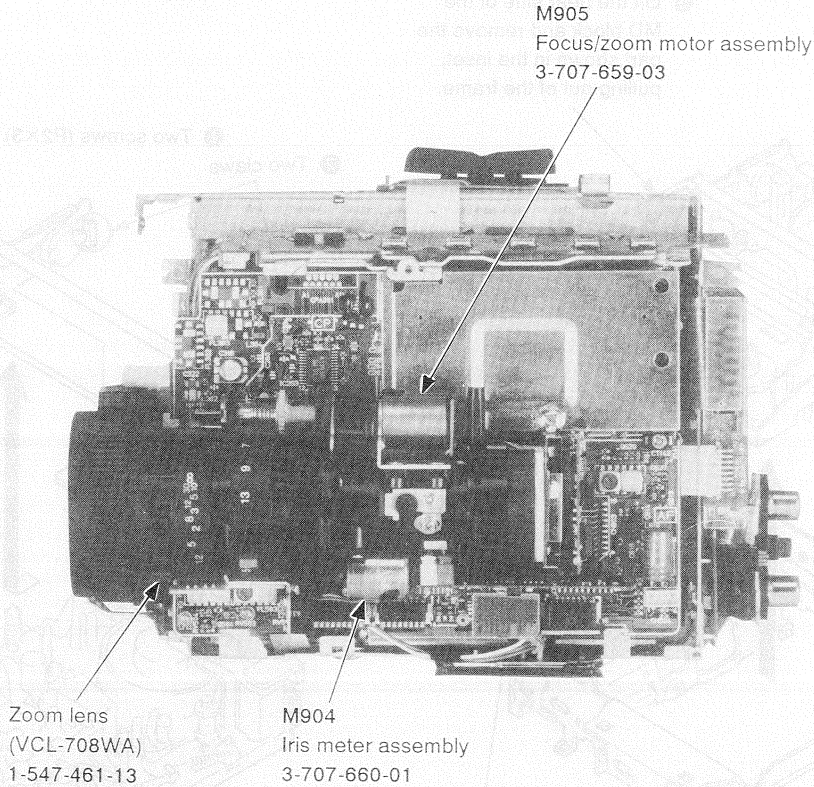

– Left Side –

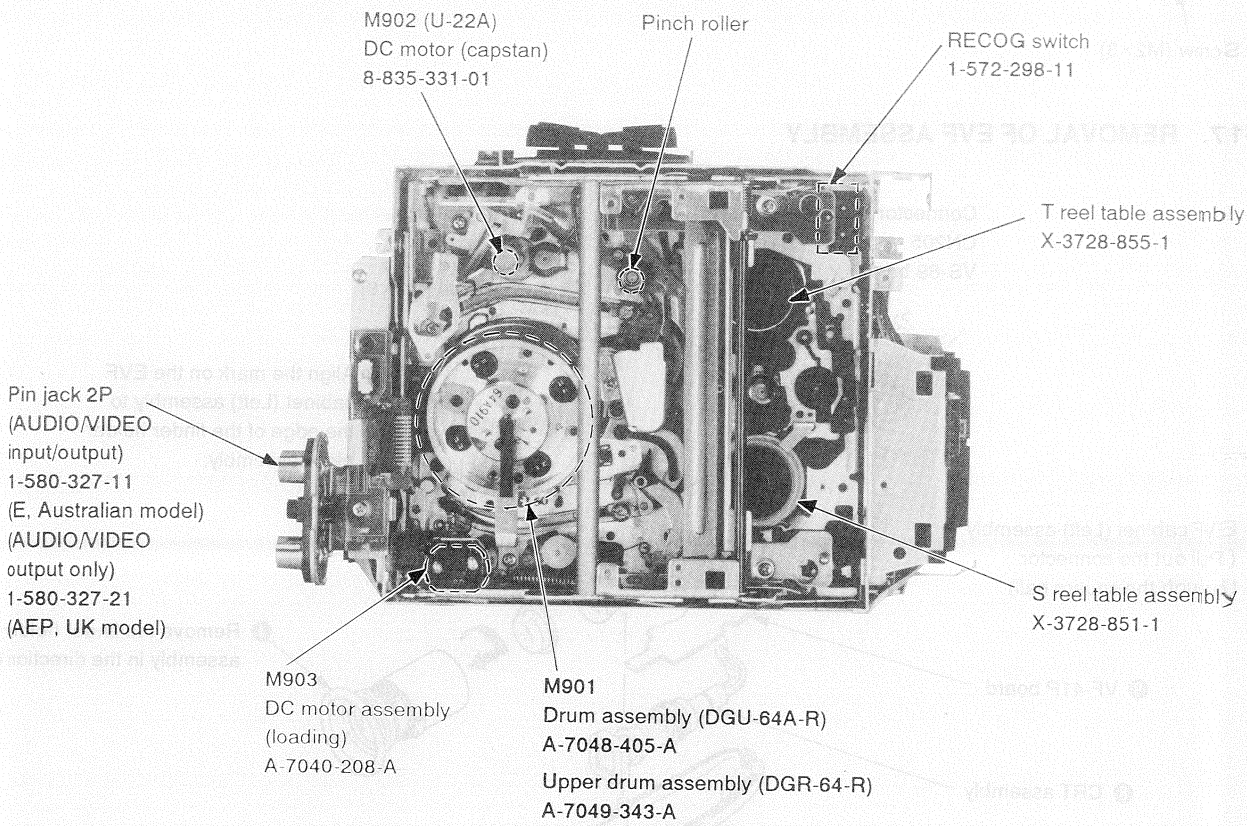

SECTION 3
DIAGRAMS

3-1. CIRCUIT BOARDS LOCATION

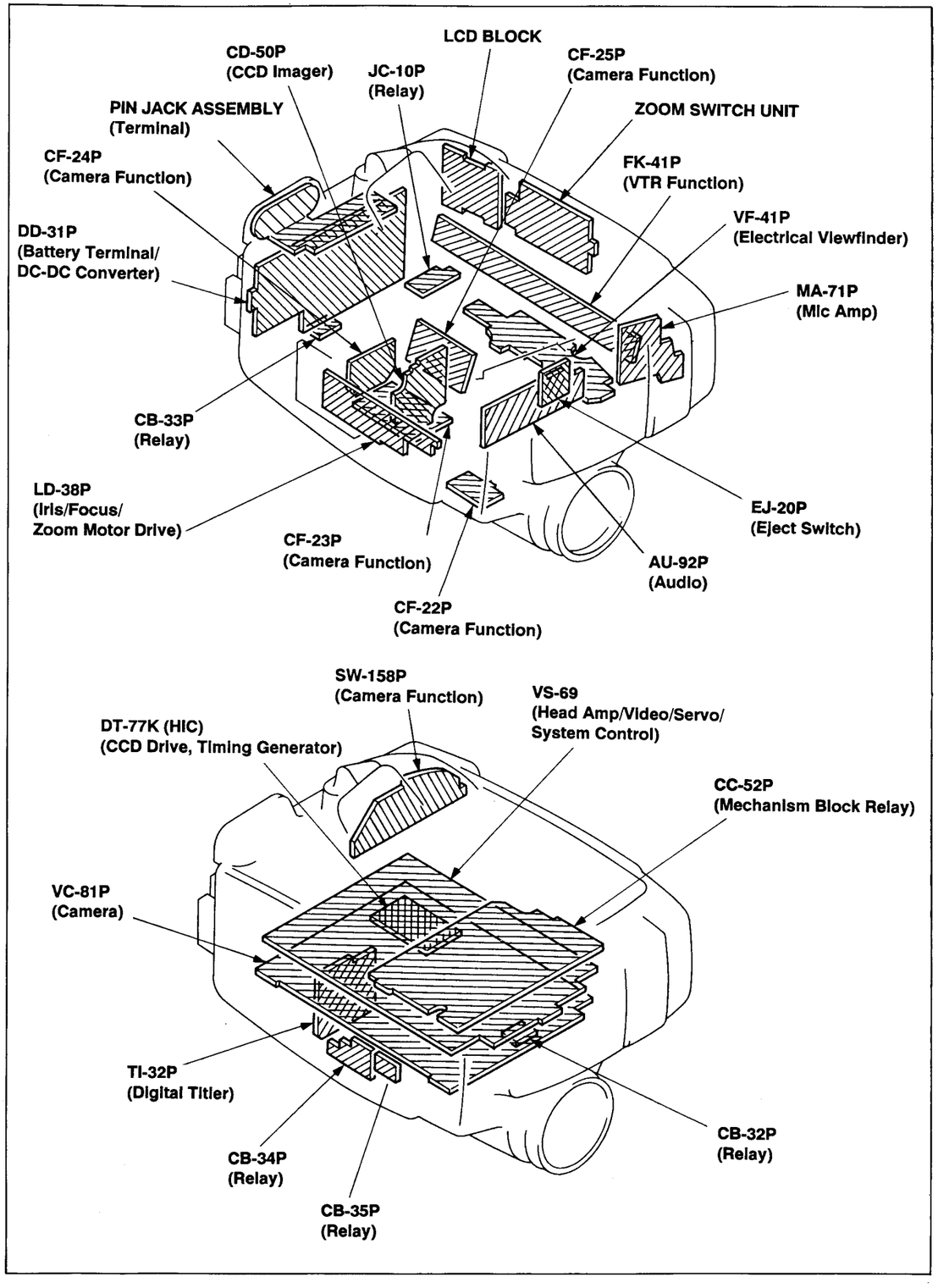

3-2. OVERALL BLOCK DIAGRAM

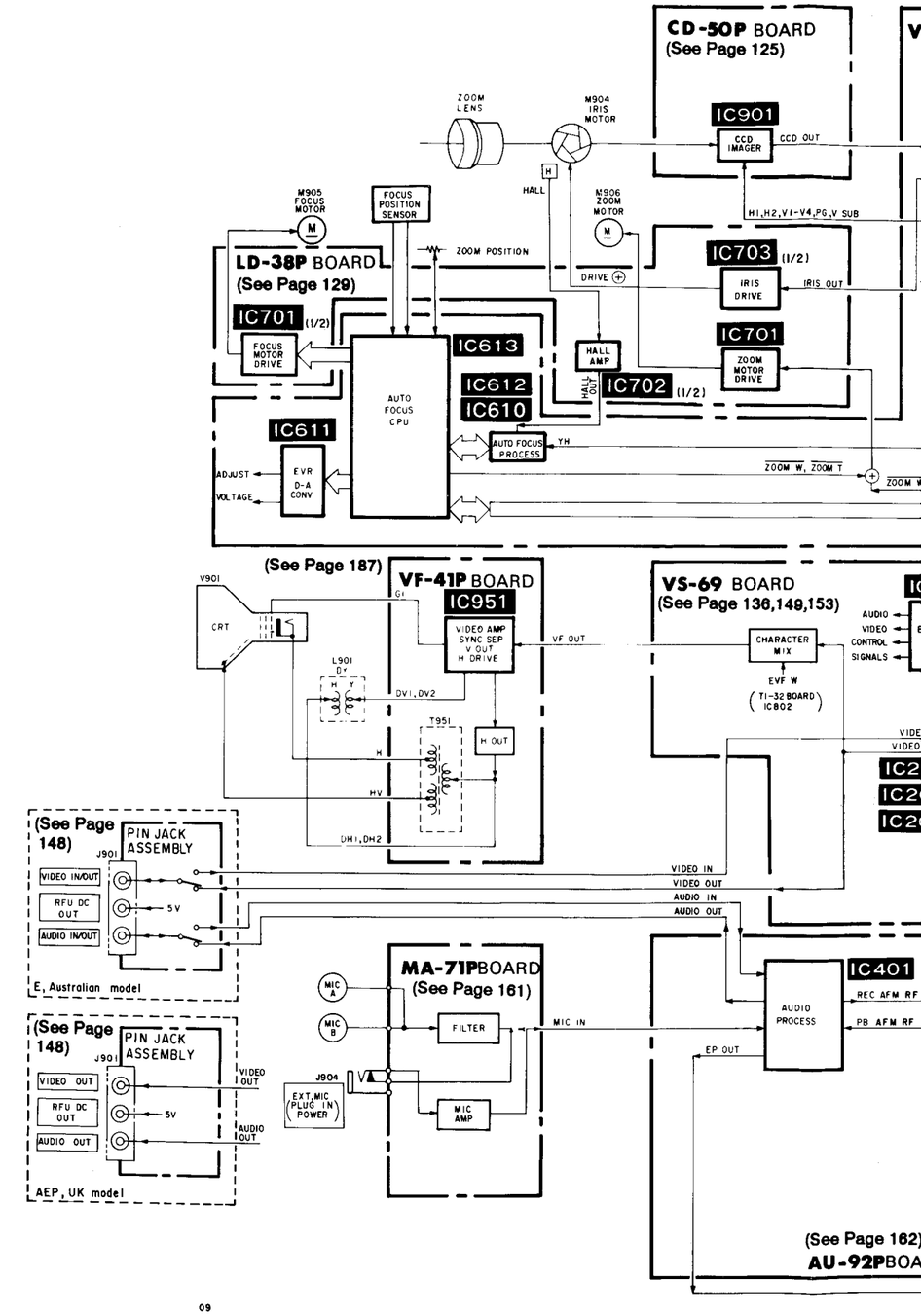

09

2. OVERALL BLOCK DIAGRAM

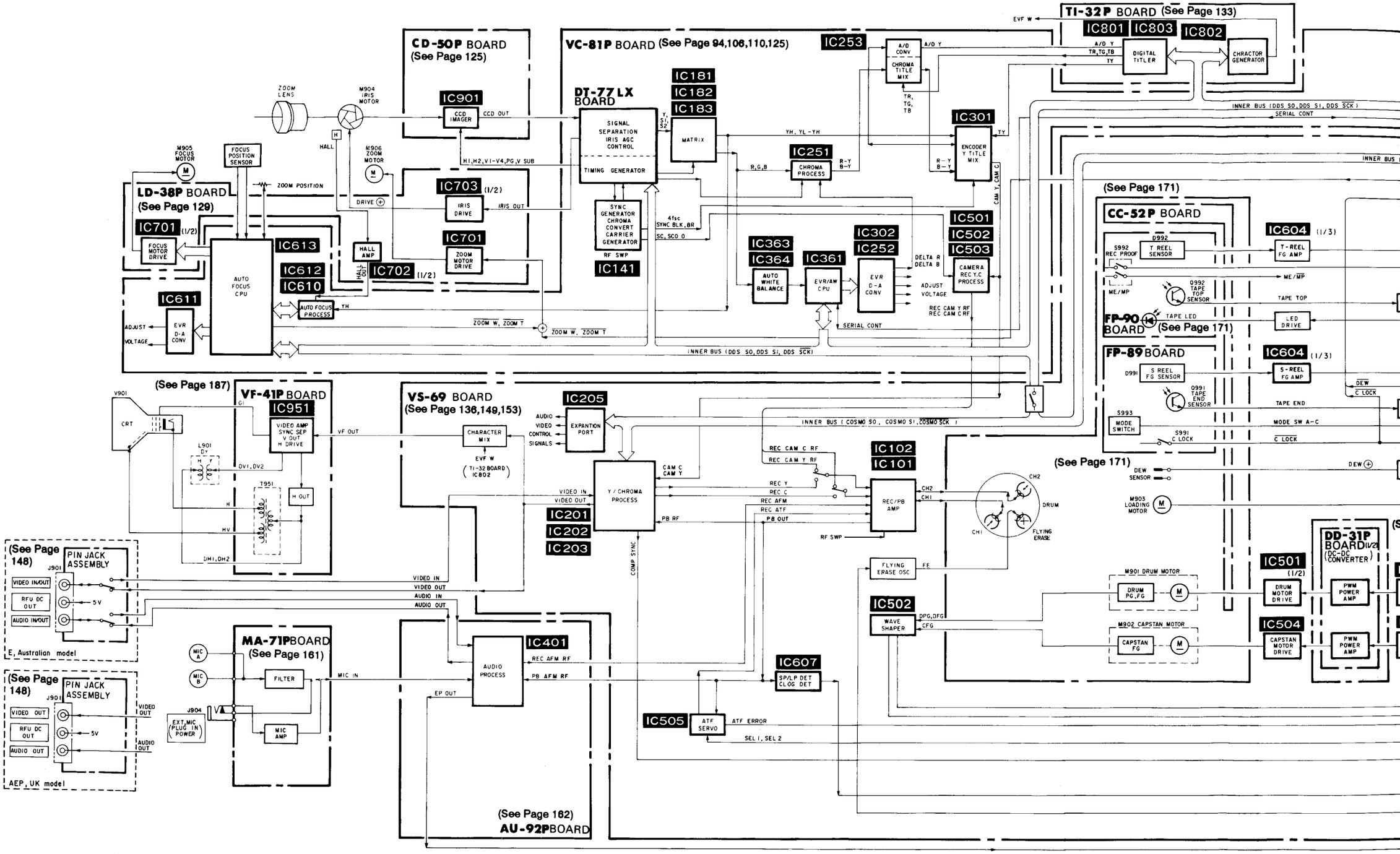

09

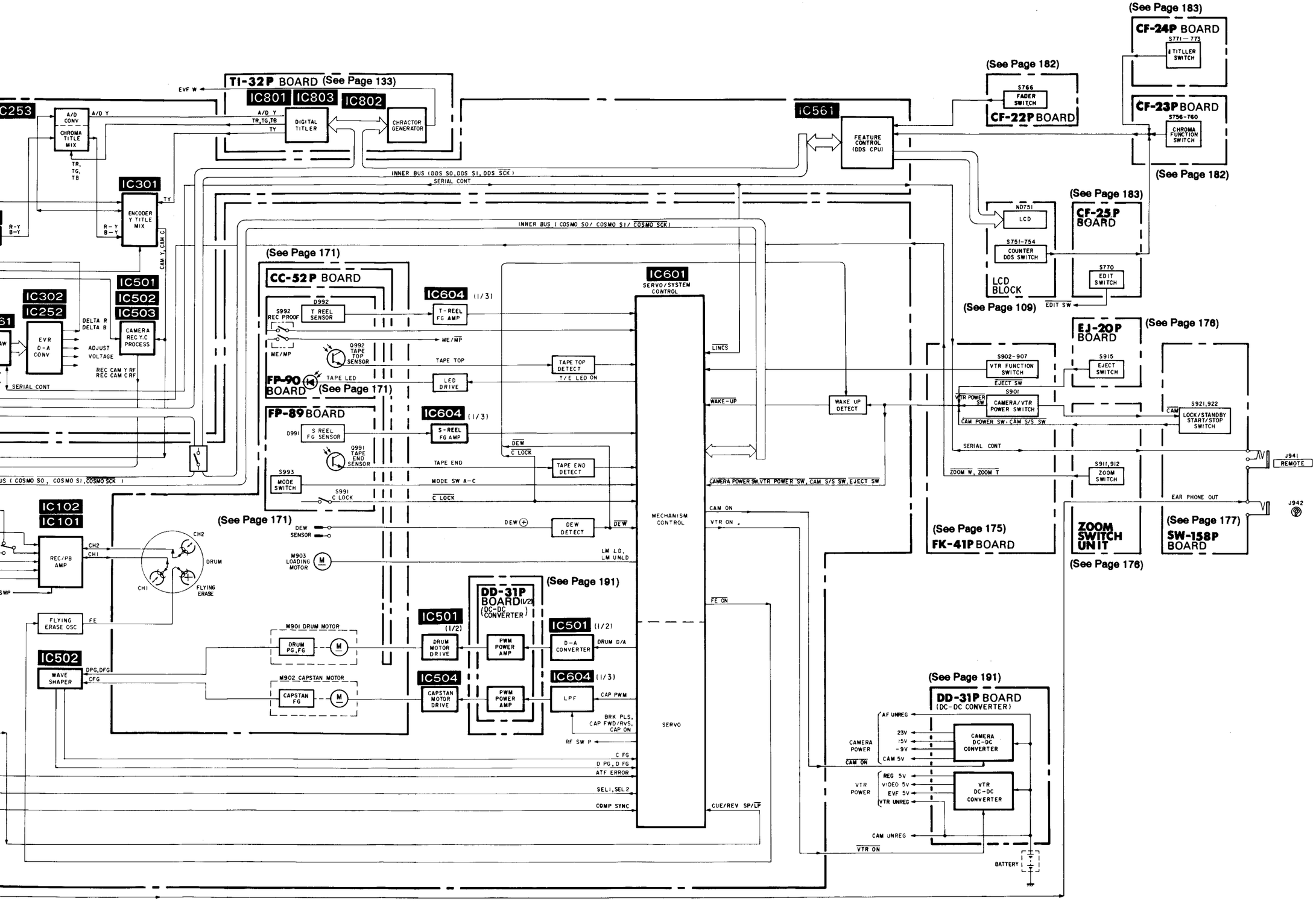
TI-32P BOARD (See Page 133)
IC801 IC803 IC802
DIGITAL TITLER
CHRACTOR GENERATOR
EVF W
A/D CONV
CHROMA TITLE MIX
A/D Y
TR, TG, TB
TY
IC253
IC301
ENCODER Y TITLE MIX
R-Y
B-Y
CAM Y, CAM C
IC561
FEATURE CONTROL (DDS CPU)
INNER BUS (DDS SO, DDS SI, DDS SCK)
SERIAL CONT
INNER BUS (COSMO SO/ COSMO SI/ COSMO SCK)
(See Page 182)
S766
FADER SWITCH
CF-22P BOARD
(See Page 183)
CF-24P BOARD
S771—773
TITLLER SWITCH
CF-23P BOARD
S756-760
CHROMA FUNCTION SWITCH
(See Page 182)
(See Page 183)
CF-25P BOARD
ND751
LCD
S751-754
COUNTER DDS SWITCH
LCD BLOCK
S770
EDIT SWITCH
EDIT SW
(See Page 109)
(See Page 171)
CC-52P BOARD
IC604 (1/3)
D992
S992 REC PROOF
T REEL SENSOR
T-REEL FG AMP
ME/MP
Q992 TAPE TOP SENSOR
TAPE TOP
TAPE TOP DETECT
T/E LED ON
FP-90 BOARD
TAPE LED
LED DRIVE
(See Page 171)
FP-89 BOARD
IC604 (1/3)
D991
S REEL FG SENSOR
S-REEL FG AMP
Q991 TAPE END SENSOR
TAPE END
TAPE END DETECT
S993
MODE SWITCH
MODE SW A-C
S991
C LOCK
DEW
DEW SENSOR
DEW DETECT
M903 LOADING MOTOR
LM LD, LM UNLD
IC601
SERVO/SYSTEM CONTROL
LINCS
WAKE-UP
WAKE UP DETECT
CAMERA POWER SW, VTR POWER SW, CAM S/S SW, EJECT SW
CAM ON
VTR ON
MECHANISM CONTROL
FE ON
SERVO
EJ-20P BOARD
(See Page 176)
S915
EJECT SWITCH
S902-907
VTR FUNCTION SWITCH
EJECT SW
S901
VTR POWER SW
CAMERA/VTR POWER SWITCH
CAM POWER SW, CAM S/S SW
S921, 922
CAM
LOCK/STANDBY START/STOP SWITCH
SERIAL CONT
ZOOM W, ZOOM T
S911, 912
ZOOM SWITCH
J941
REMOTE
EAR PHONE OUT
J942
(See Page 175)
FK-41P BOARD
ZOOM SWITCH UNIT
(See Page 176)
(See Page 177)
SW-158P BOARD
IC102
IC101
REC/PB AMP
CH2
CH1
DRUM
FLYING ERASE
FLYING ERASE OSC
FE
IC502
WAVE SHAPER
DPG, DFG
CFG
M901 DRUM MOTOR
DRUM PG, FG
M902 CAPSTAN MOTOR
CAPSTAN FG
IC501 (1/2)
DRUM MOTOR DRIVE
IC504
CAPSTAN MOTOR DRIVE
DD-31P BOARD (1/2) (DC-DC CONVERTER)
(See Page 191)
PWM POWER AMP
IC501 (1/2)
D-A CONVERTER
DRUM D/A
IC604 (1/3)
LPF
CAP PWM
BRK PLS, CAP FWD/RVS, CAP ON
RF SW P
C FG
D PG, D FG
ATF ERROR
SEL1, SEL2
COMP SYNC
CUE/REV SP/LP
(See Page 191)
DD-31P BOARD
(DC-DC CONVERTER)
CAMERA POWER
AF UNREG
23V
15V
-9V
CAM 5V
CAM ON
CAMERA DC-DC CONVERTER
VTR POWER
REG 5V
VIDEO 5V
EVF 5V
VTR UNREG
VTR DC-DC CONVERTER
CAM UNREG
VTR ON
BATTERY

3-3. CAMERA BLOCK DIAGRAM

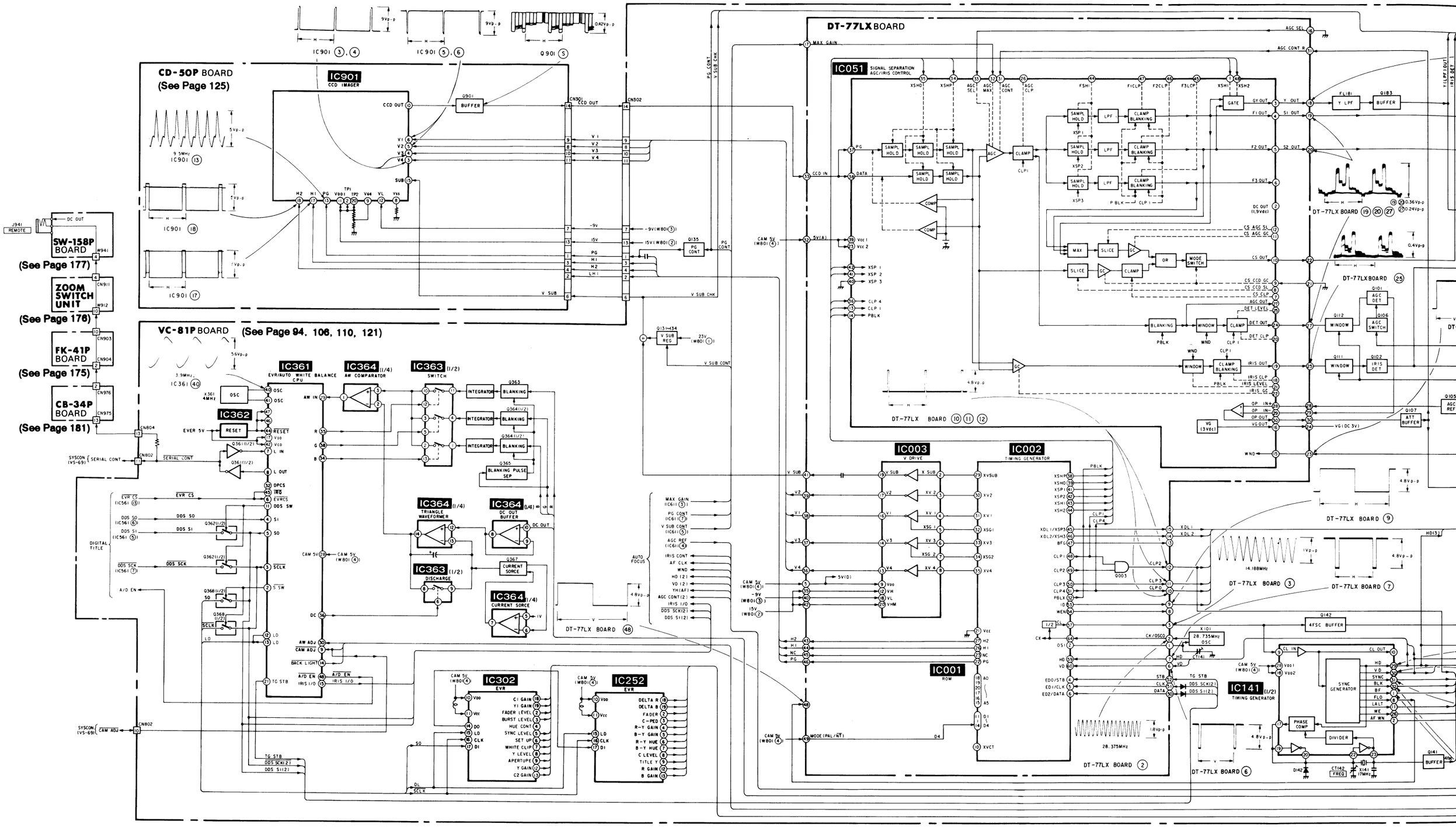

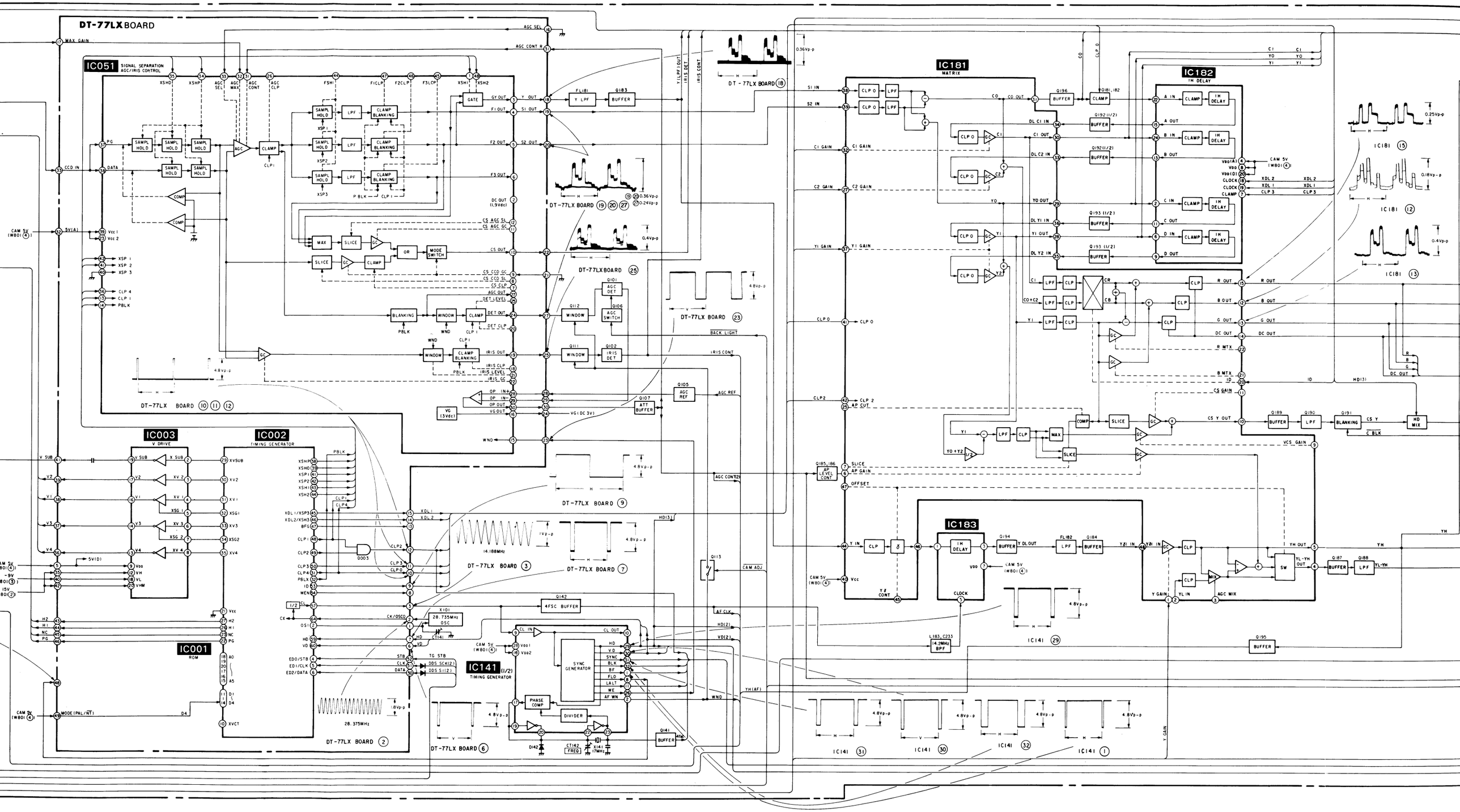
DT-77LX BOARD
IC051 SIGNAL SEPARATION AGC/IRIS CONTROL
IC001 ROM
IC002 TIMING GENERATOR
IC003 V DRIVE
IC141 (1/2) TIMING GENERATOR
IC181 MATRIX
IC182 1H DELAY
IC183 1H DELAY
MAX GAIN
AGC SEL
AGC CONT R
CCD IN
DATA
PG
CAM 5V (WB01 4)
5V(A)
5V(D)
-9V (WB01 3)
15V (WB01 2)
XSP 1
XSP 2
XSP 3
CLP 4
CLP 1
PBLK
SAMPL HOLD
LPF
CLAMP BLANKING
AGC
CLAMP
CLP1
COMP
GATE
Y LPF
BUFFER
MAX
SLICE
OR
MODE SWITCH
BLANKING
WINDOW
DET LEVEL
DET CLP
IRIS CLP
IRIS LEVEL
IRIS GC
AGC DET
AGC SWITCH
IRIS DET
VG (3Vdc)
AGC REF
ATT BUFFER
BACK LIGHT
IRIS CONT
AGC CONT2
CAM ADJ
AF CLK
HD(2)
VD(2)
YM(AF)
WND
4FSC BUFFER
28.735MHz OSC
SYNC GENERATOR
PHASE COMP
DIVIDER
TG STB
DDS SCK(2)
DDS SI(2)
28.375MHz
14.188MHz
MODE(PAL/NT)
V SUB
V2
V1
V3
V4
H2
H1
NC
PG
XV SUB
XV 2
XV 1
XV 3
XV 4
XSG 1
XSG 2
XVSUB
XV2
XV1
XSG1
XV3
XSG2
XV4
Vcc
Vdd
VH
VL
VHM
A0
A5
D1
D4
XVCT
XSHP
XSHD
XSP1
XSP2
XSP3
XSH1
XSH2
XDL1/XSP3
XDL2/XSH3
BFG
CLP1
CLP2
CLP3
CLP4
PBLK
ID
WEN
CX
CK/OSCO
OSI
HD
VD
EDO/STB
EDI/CLK
EDZ/DATA
STB
CLK
DATA
0003
X101
CT141
CT142 FREQ
X141 17MHz
D142
Q141 BUFFER
Q142
Q101
Q106
Q107
Q111
Q112
Q113
Q183
Q185,186
Q189
Q190
Q191
Q193 (1/2)
Q194
Q195
Q196
FL181
FL182
Q184
Q187
Q188
L183, C233 14.2MHz BPF
SI IN
S2 IN
C1 GAIN
C2 GAIN
Y1 GAIN
CLP 0
CLP 2
AP CUT
SLICE
AP GAIN
OFFSET
Y IN
Y GAIN
Y1 IN
Y1 OUT
Y0 OUT
CO OUT
C1 OUT
DL C1 IN
DL C2 IN
DL Y1 IN
DL Y2 IN
A IN
B IN
C IN
D IN
A OUT
B OUT
C OUT
D OUT
R MTX
B MTX
CS GAIN
VCS GAIN
CS Y OUT
YH OUT
YL IN
AGC MIX
Y GAIN
CAM 5V (WB01 4)
XDL 2
XDL 1
CLP 3
C BLK
HD MIX
DT-77LX BOARD (10) (11) (12)
DT-77LX BOARD (2)
DT-77LX BOARD (3)
DT-77LX BOARD (6)
DT-77LX BOARD (7)
DT-77LX BOARD (9)
DT-77LX BOARD (18)
DT-77LX BOARD (19) (20) (27)
DT-77LX BOARD (23)
DT-77LX BOARD (25)
IC141 (29)
IC141 (31)
IC141 (30)
IC141 (32)
IC141 (1)
IC181 (15)
IC181 (12)
IC181 (13)

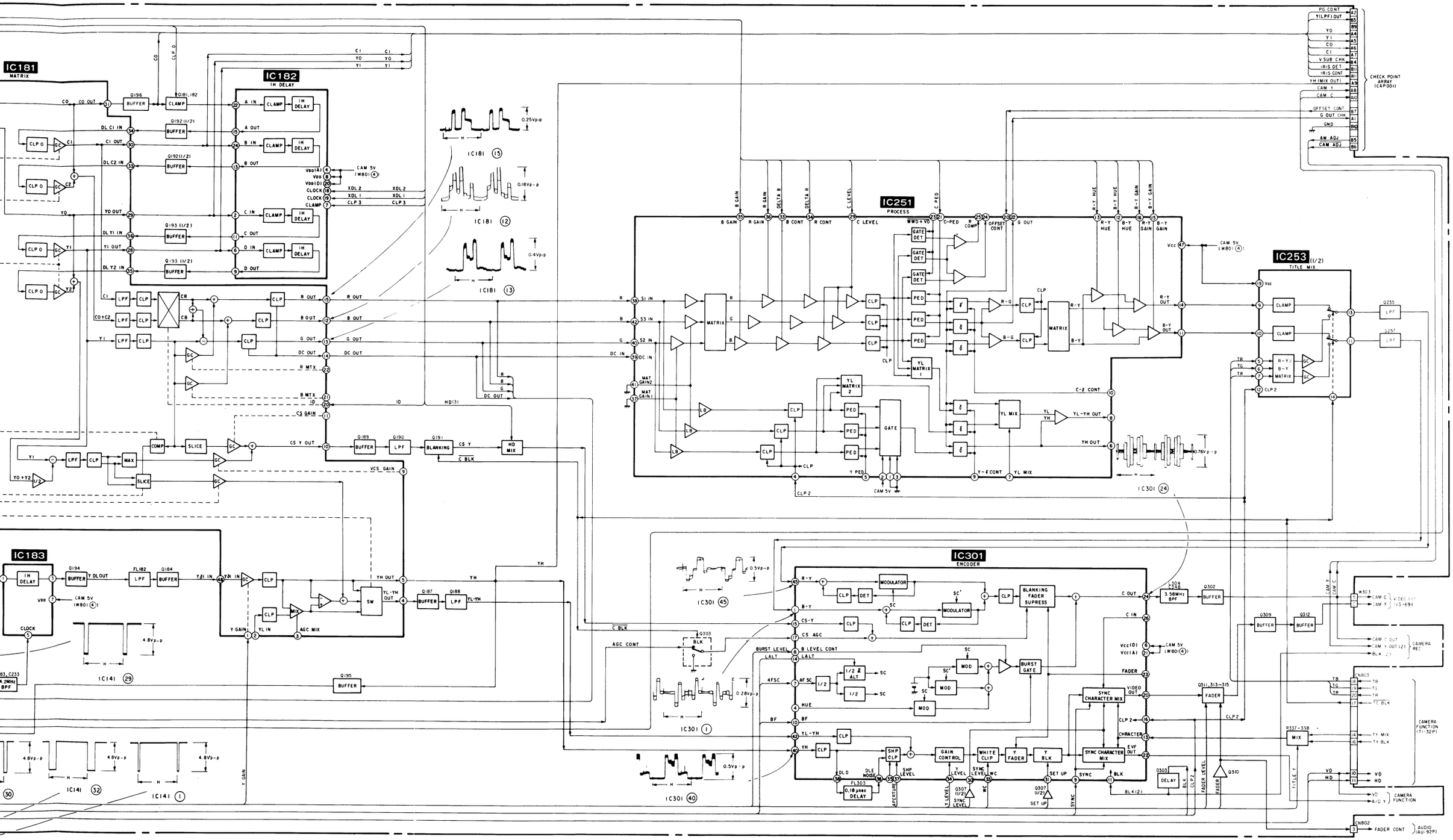
IC181
MATRIX
IC182
1H DELAY
IC251
PROCESS
IC253 (1/2)
TITLE MIX
IC183
IC301
ENCODER
CHECK POINT ARRAY (CAP001)
CAMERA REC
CAMERA FUNCTION (T1-32P)
CAMERA FUNCTION
AUDIO (AU-92P)
FADER CONT

3-4. AUTO FOCUS BLOCK DIAGRAM

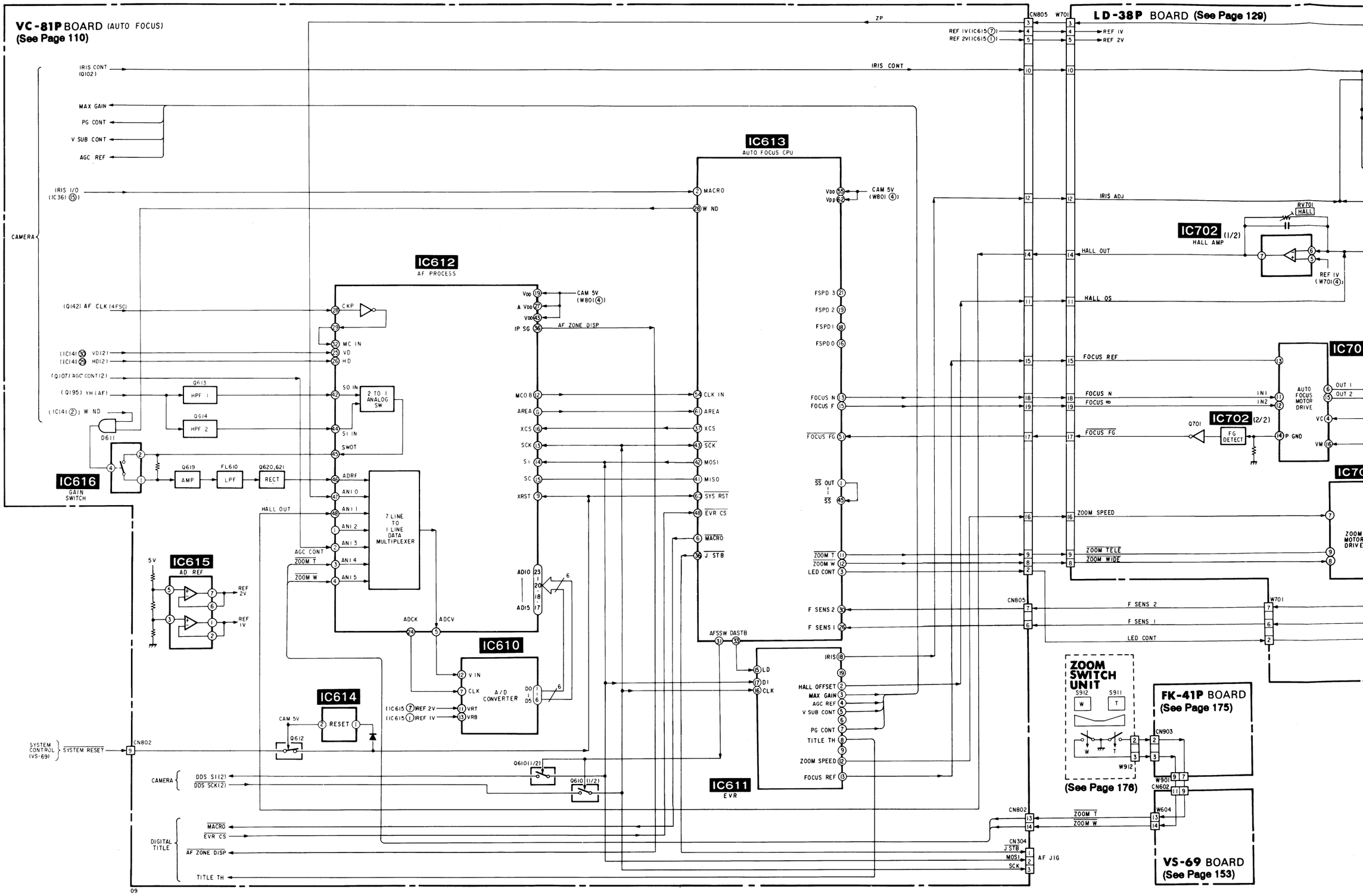

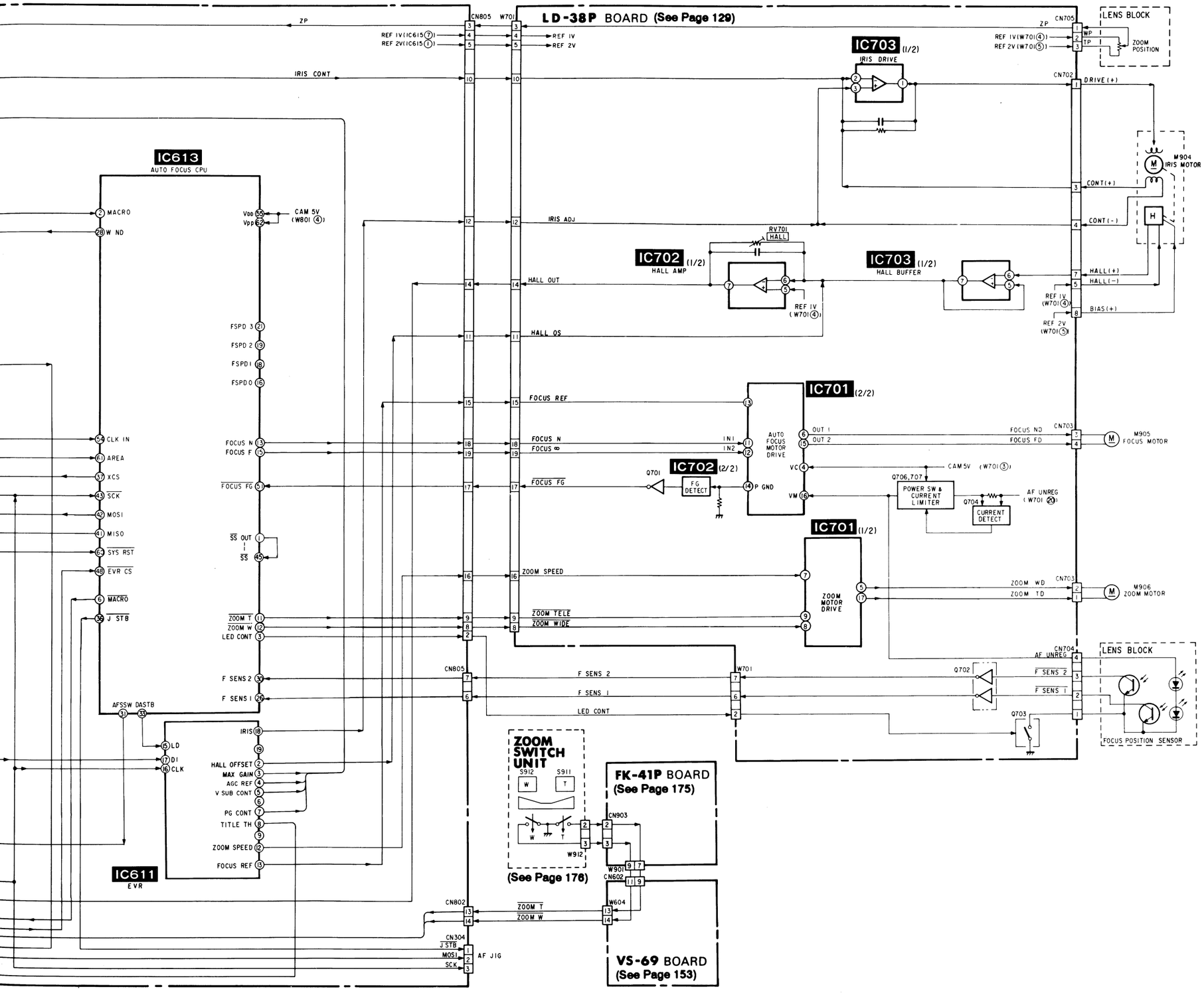
LD-38P BOARD (See Page 129)
CN805
W701
ZP
REF 1V(IC615⑦)
REF 2V(IC615①)
REF 1V
REF 2V
IRIS CONT
IC613
AUTO FOCUS CPU
MACRO
W ND
Vdd 59
Vpp 62
CAM 5V (W801 ④)
FSPD 3 21
FSPD 2 19
FSPD 1 18
FSPD 0 16
CLK IN 54
AREA 61
XCS 37
SCK 43
MOSI 42
MISO 41
SYS RST 63
EVR CS 48
MACRO 6
J STB 39
FOCUS N 13
FOCUS F 15
FOCUS FG 51
SS OUT 1
SS 45
ZOOM T 11
ZOOM W 12
LED CONT 3
F SENS 2 30
F SENS 1 29
AFSSW DASTB 31 33
LD 5
DI 17
CLK 16
IRIS 18
19
HALL OFFSET 2
MAX GAIN 3
AGC REF 4
V SUB CONT 5
6
PG CONT 7
TITLE TH 8
9
ZOOM SPEED 12
FOCUS REF 13
IC611
EVR
IRIS ADJ
HALL OUT
HALL QS
FOCUS REF
FOCUS N
FOCUS ∞
FOCUS FG
ZOOM SPEED
ZOOM TELE
ZOOM WIDE
F SENS 2
F SENS 1
LED CONT
IC703 (1/2)
IRIS DRIVE
RV701
HALL
IC702 (1/2)
HALL AMP
REF 1V (W701 ④)
IC703 (1/2)
HALL BUFFER
IC701 (2/2)
AUTO FOCUS MOTOR DRIVE
IN1
IN2
OUT 1
OUT 2
VC
VM
P GND
Q701
IC702 (2/2)
FG DETECT
CAM 5V (W701 ③)
Q706,707
POWER SW & CURRENT LIMITER
Q704
CURRENT DETECT
AF UNREG (W701 29)
IC701 (1/2)
ZOOM MOTOR DRIVE
CN702
DRIVE (+)
CONT (+)
CONT (-)
CN705
WP
TP
ZOOM POSITION
LENS BLOCK
M904
IRIS MOTOR
H
HALL (+)
HALL (-)
BIAS (+)
REF 1V (W701 ④)
REF 2V (W701 ⑤)
CN703
FOCUS ND
FOCUS FD
M905
FOCUS MOTOR
ZOOM WD
ZOOM TD
M906
ZOOM MOTOR
CN704
AF UNREG
F SENS 2
F SENS 1
Q702
Q703
LENS BLOCK
FOCUS POSITION SENSOR
ZOOM SWITCH UNIT
S912
S911
W
T
W912
(See Page 176)
FK-41P BOARD
(See Page 175)
CN903
W901
CN602
W604
CN802
ZOOM T
ZOOM W
CN304
J STB
MOSI
SCK
AF JIG
VS-69 BOARD
(See Page 153)

3-5. CAMERA FUNCTION/DIGITAL TITLER BLOCK DIAGRAM

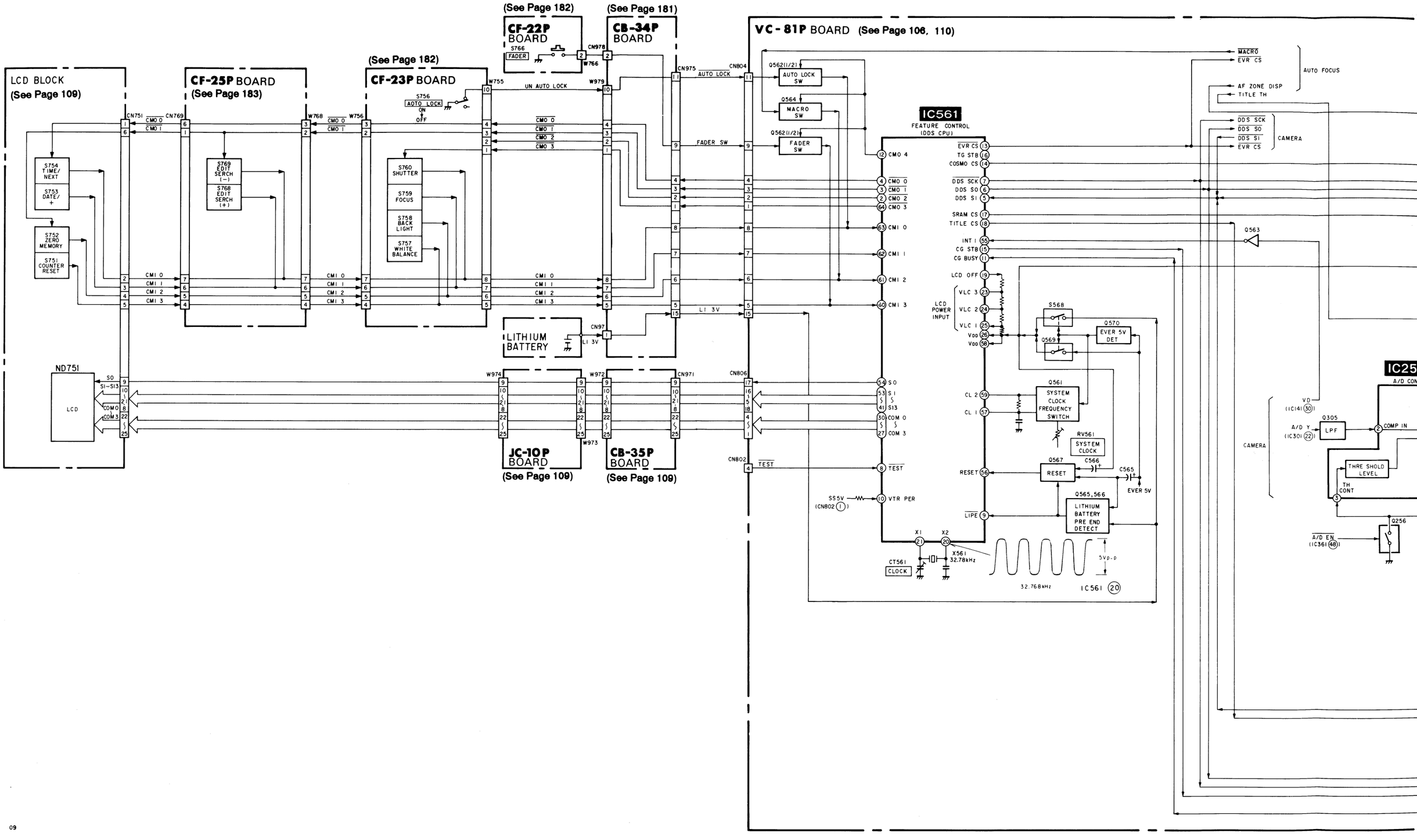

09

AUTO FOCUS

CAMERA

CN803 1 EVF W

R659,585 MIX

CN802 12 EVF W → VIDEO (2) (VS-69)

5 COSMO CS
6 DDS SCK
7 DDS SO
8 DDS SI
SYSCON (VS-69)

EVF W → CN801 1

TI-32P BOARD **(See Page 133)**

CN803 13 DDS B+ → CN804 13

CN803 3 SRAM CS → CN804 3

IC801 TITLE MEMORY

64k BIT STATIC MEMORY

28 5V
20 CS
Q801
TP801
I/O 1-I/O 8 (11-13, 15-19)
OE (22) WE (27)
A14, A1-A5 (1, 9-5)
A6-A12, A0 (4, 3, 25, 24, 21, 23, 2, 10)
A13 (26)

IC803 DIGITAL TITLE PROCESS

64 LCLR
54 OE
49 WE
19-17, 63-59 (8)
20-24, 27 (6)
28, 29, 51, 52, 55, 53, 30, 50 (8)
31 A14

I/O 1 - I/O 8
A0 - A5
A6 - A13

IC253 (1/2) A/D CONVERTER

VD (IC141 (30))
Q305
A/D Y (IC301 (22))
LPF
2 COMP IN
1 COMP OUT
THRE SHOLD LEVEL
3 TH CONT
Q256
A/D EN (IC361 (48))

15 TITLE A/D → 37

SHIFT IN
S→P P→S
TITLE Y WRITE
TIMING GENERATOR
TITLE Y+C READ
INVERT
V TITLE AREA
Y/C DELAY
H ADDRESS COUNTER
H TITLE AREA
V ADDRESS COUNTER
A14 GENERATOR
SCROLL MODE
A TITLE AREA SCROLL MODE GENERATOR
SYSTEM MODE COMMAND
COMMAND DECODE
H TIMING GENERATOR
MASTER LOCK
BUSY 33 CS 34 SI 36 SCK 35

CG BK 16 CG IN 15 CG MK 14

CHRACTER MIX
YR,YG,YB SYNTHESIS
E DGE SYNTHESIS
CR,CG,CB SYNTHESIS
E DGE SYNTHESIS
FRAME DETECT
PHASE DETECT

TITLE Y READ
TITLE C READ
Q802

Y RO 48 Y GO 47 Y BO 46 → Y MATRIX
Y BLK 45
C RO 41 C GO 40 C BO 39
C BLK 38
VD 43 HD 44

TP803 VDD 25 VDD 26 ← SS 5V (CN801 (12))

CN801
14 TY MIX
16 TY BLK
20 TR
19 TG
18 TB
17 TC BLK
CAMERA (VC-81P)
10 VD
11 HD

OSC O 11 OSC I 9
PD UP 12 XP DN 13
TP804
LPF
CT801 TITLE PLL
D801
VCO
0.68Vp-p
9.448MHz
IC803 (9) CAMERA REC

IC802 CHARACTER GENERATOR

11 MP
15 VBLK
13 VG
4 DATA
2 CLK
3 STB
V 18 H 19 HOLD 20 CK OUT 7 → TP806
TP805
OSC O 8 OSC I 9
CT802 CHARACTER GEN fo
2Vp-p
5.344MHz
IC802 (8) CAMERA REC

7 DDS SI
4 TITLE CS
6 DDS SO
5 DDS SCK
8 CG STB
9 CG BUSY

3-6. VIDEO (1) BLOCK DIAGRAM

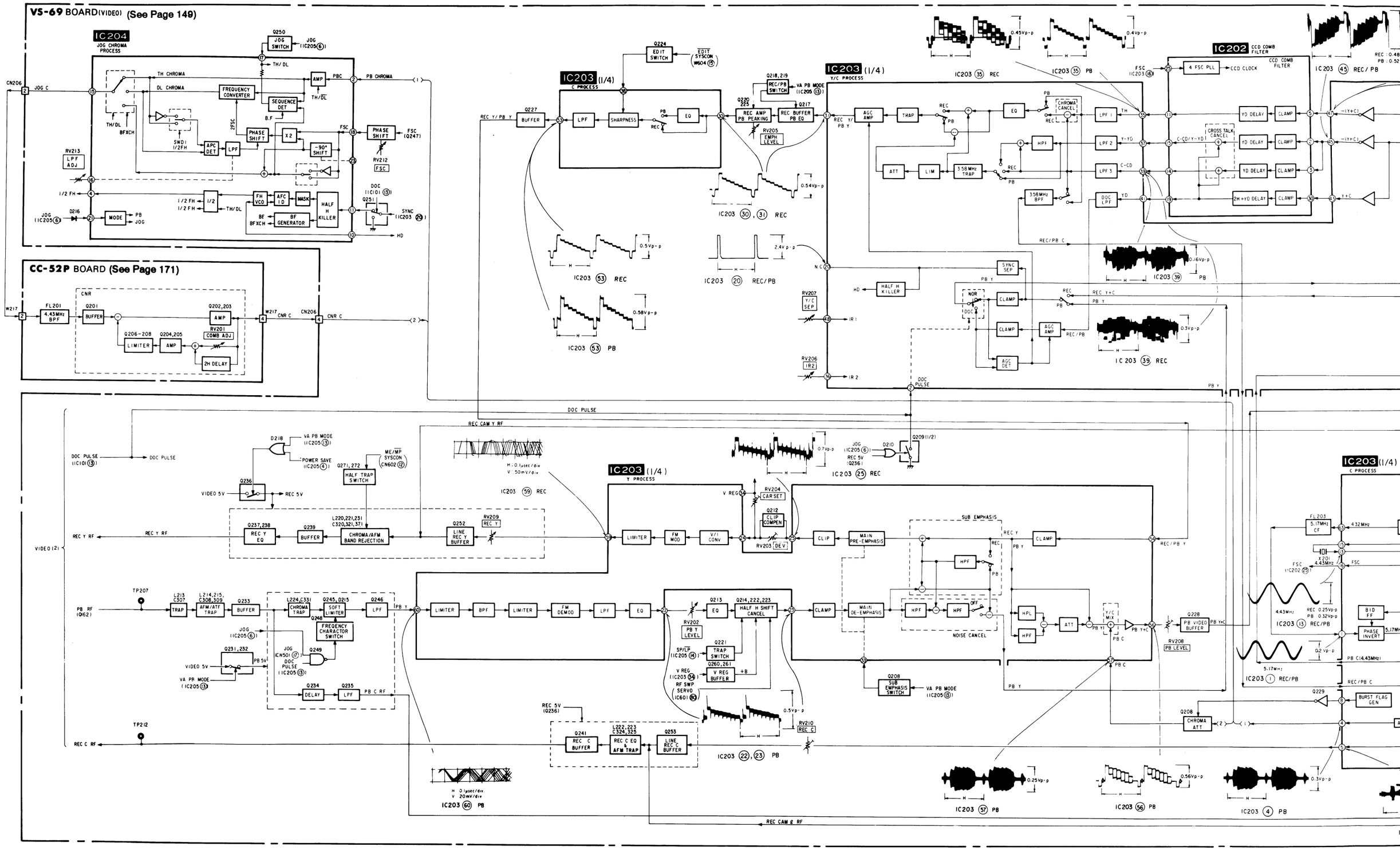

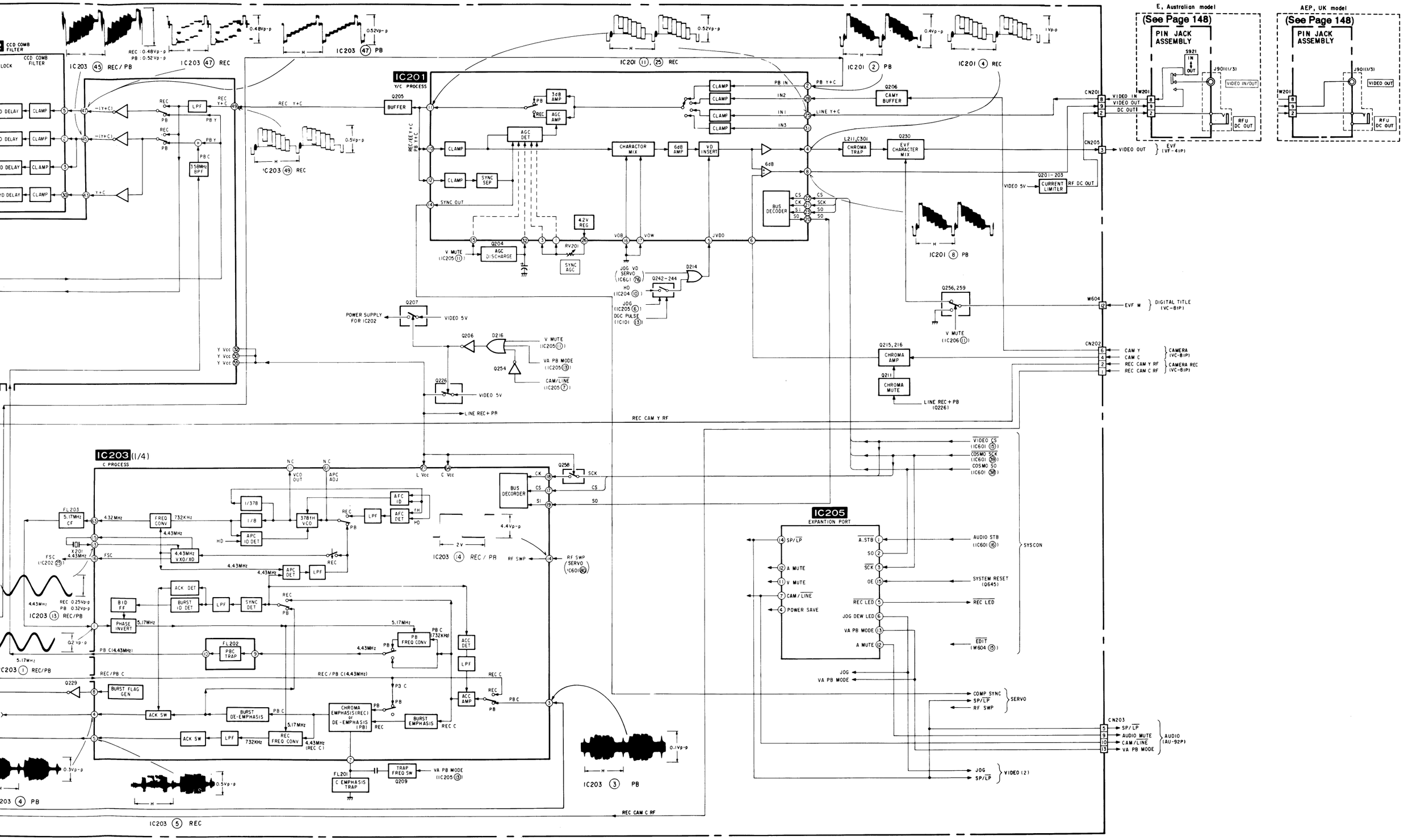
IC201
Y/C PROCESS
IC203 (1/4)
C PROCESS
IC205
EXPANTION PORT
E, Australian model
(See Page 148)
PIN JACK ASSEMBLY
AEP, UK model
(See Page 148)
PIN JACK ASSEMBLY
IC203 (45) REC/PB
IC203 (47) REC
IC203 (47) PB
IC201 (11), (25) REC
IC201 (2) PB
IC201 (4) REC
IC203 (49) REC
IC201 (8) PB
IC203 (4) REC/PB
IC203 (13) REC/PB
IC203 (1) REC/PB
IC203 (4) PB
IC203 (5) REC
IC203 (3) PB
CCD COMB FILTER
BUFFER
3dB AMP
AGC AMP
AGC DET
CLAMP
SYNC SEP
CHARACTOR MIX
6dB AMP
VD INSERT
BUS DECODER
CHROMA TRAP
EVF CHARACTER MIX
CURRENT LIMITER
AGC DISCHARGE
4.2V REG
SYNC AGC
CAMY BUFFER
CHROMA AMP
CHROMA MUTE
POWER SUPPLY FOR IC202
VIDEO 5V
LINE REC+PB
REC CAM Y RF
REC CAM C RF
FREQ CONV
APC ID DET
4.43MHz VXO/XO
APC DET
ACK DET
BURST ID DET
SYNC DET
BID FF
PHASE INVERT
PB FREQ CONV
PBC TRAP
BURST FLAG GEN
ACK SW
BURST DE-EMPHASIS
REC FREQ CONV
CHROMA EMPHASIS(REC) or DE-EMPHASIS (PB)
BURST EMPHASIS
ACC DET
ACC AMP
C EMPHASIS TRAP
TRAP FREQ SW
RF SWP SERVO
SYSCON
SERVO
AUDIO (AU-92P)
VIDEO (2)
CAMERA (VC-81P)
CAMERA REC (VC-81P)
DIGITAL TITLE (VC-81P)
EVF (VF-41P)
RFU DC OUT
VIDEO IN/OUT
VIDEO OUT
DC OUT
AUDIO MUTE
CAM/LINE
VA PB MODE
COMP SYNC
SP/LP
RF SWP
JOG
A.STB
SO
SCK
OE
REC LED
JOG DEW LED
A MUTE
V MUTE
POWER SAVE
SYSTEM RESET (Q645)
EDIT (W604 (15))
AUDIO STB (IC601 (16))
VIDEO CS (IC601 (15))
COSMO SCK (IC601 (39))
COSMO SO (IC601 (38))

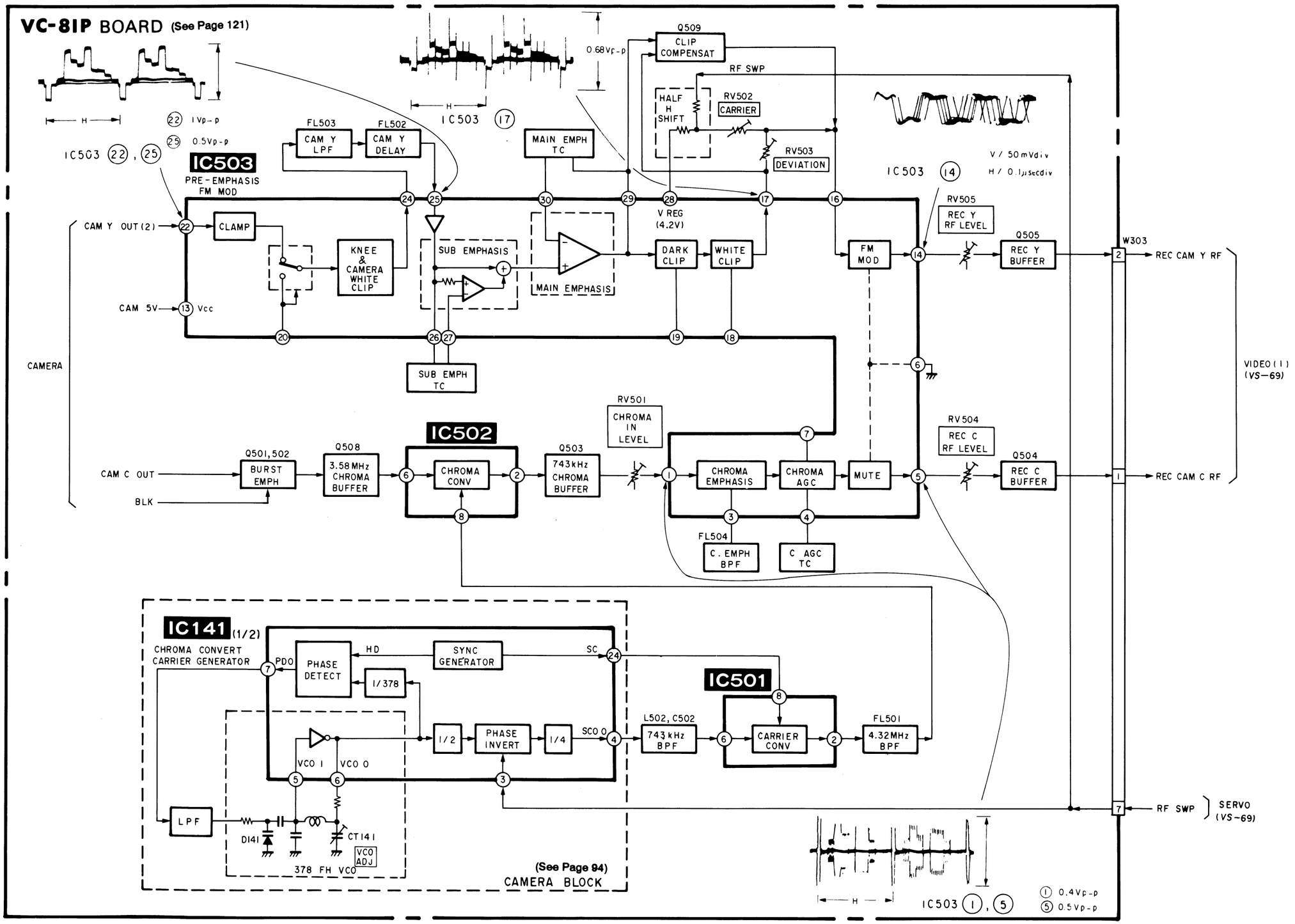
VC-81P BOARD (See Page 121)
H
22 1Vp-p
25 0.5Vp-p
IC503 22 , 25
IC503
PRE-EMPHASIS
FM MOD
0.68Vp-p
H
IC503 17
Q509
CLIP
COMPENSAT
RF SWP
HALF
H
SHIFT
RV502
CARRIER
RV503
DEVIATION
IC503 14
V / 50mVdiv
H / 0.1μsecdiv
FL503
CAM Y
LPF
FL502
CAM Y
DELAY
MAIN EMPH
TC
CAM Y OUT(2)
22
CLAMP
KNEE
&
CAMERA
WHITE
CLIP
SUB EMPHASIS
MAIN EMPHASIS
CAM 5V
13 Vcc
20
26 27
SUB EMPH
TC
24
25
30
29
28
V REG
(4.2V)
17
16
DARK
CLIP
WHITE
CLIP
FM
MOD
14
RV505
REC Y
RF LEVEL
Q505
REC Y
BUFFER
W303
2
REC CAM Y RF
VIDEO(1)
(VS-69)
CAMERA
6
RV501
CHROMA
IN
LEVEL
IC502
RV504
REC C
RF LEVEL
Q504
REC C
BUFFER
CAM C OUT
BLK
Q501,502
BURST
EMPH
Q508
3.58MHz
CHROMA
BUFFER
6
CHROMA
CONV
2
8
Q503
743kHz
CHROMA
BUFFER
7
1
CHROMA
EMPHASIS
CHROMA
AGC
MUTE
5
3
4
FL504
C. EMPH
BPF
C AGC
TC
REC CAM C RF
IC141 (1/2)
CHROMA CONVERT
CARRIER GENERATOR
7
PDO
PHASE
DETECT
HD
SYNC
GENERATOR
SC
24
1/378
IC501
8
L502, C502
743kHz
BPF
6
CARRIER
CONV
2
FL501
4.32MHz
BPF
1/2
PHASE
INVERT
1/4
SCO O
4
VCO I
VCO O
5
6
3
LPF
DI141
CT141
VCO
ADJ
378 FH VCO
(See Page 94)
CAMERA BLOCK
7
RF SWP
SERVO
(VS-69)
H
IC503 1 , 5
1 0.4Vp-p
5 0.5Vp-p

09

3-8. VIDEO (2) BLOCK DIAGRAM

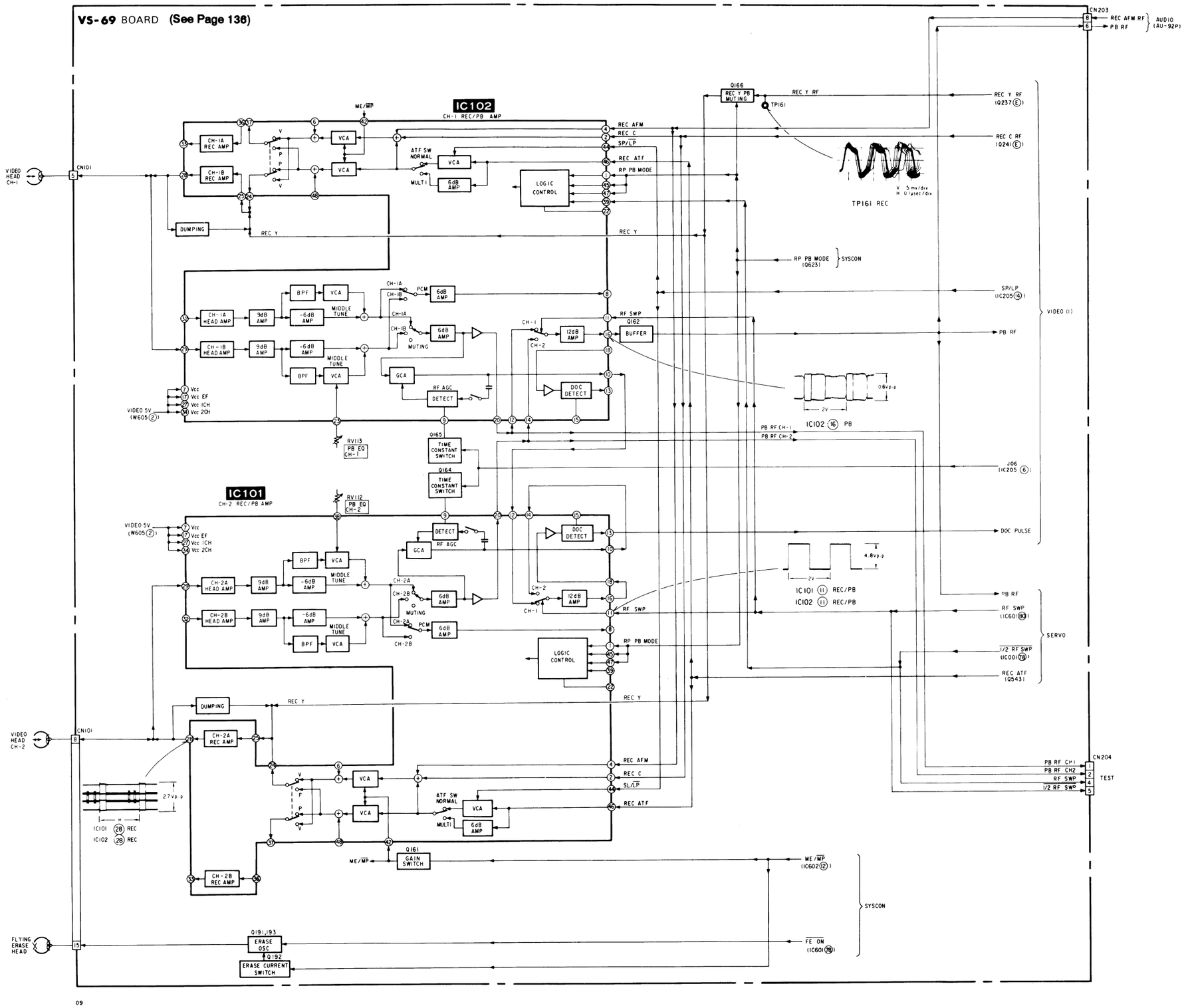

3-9. SERVO BLOCK DIAGRAM

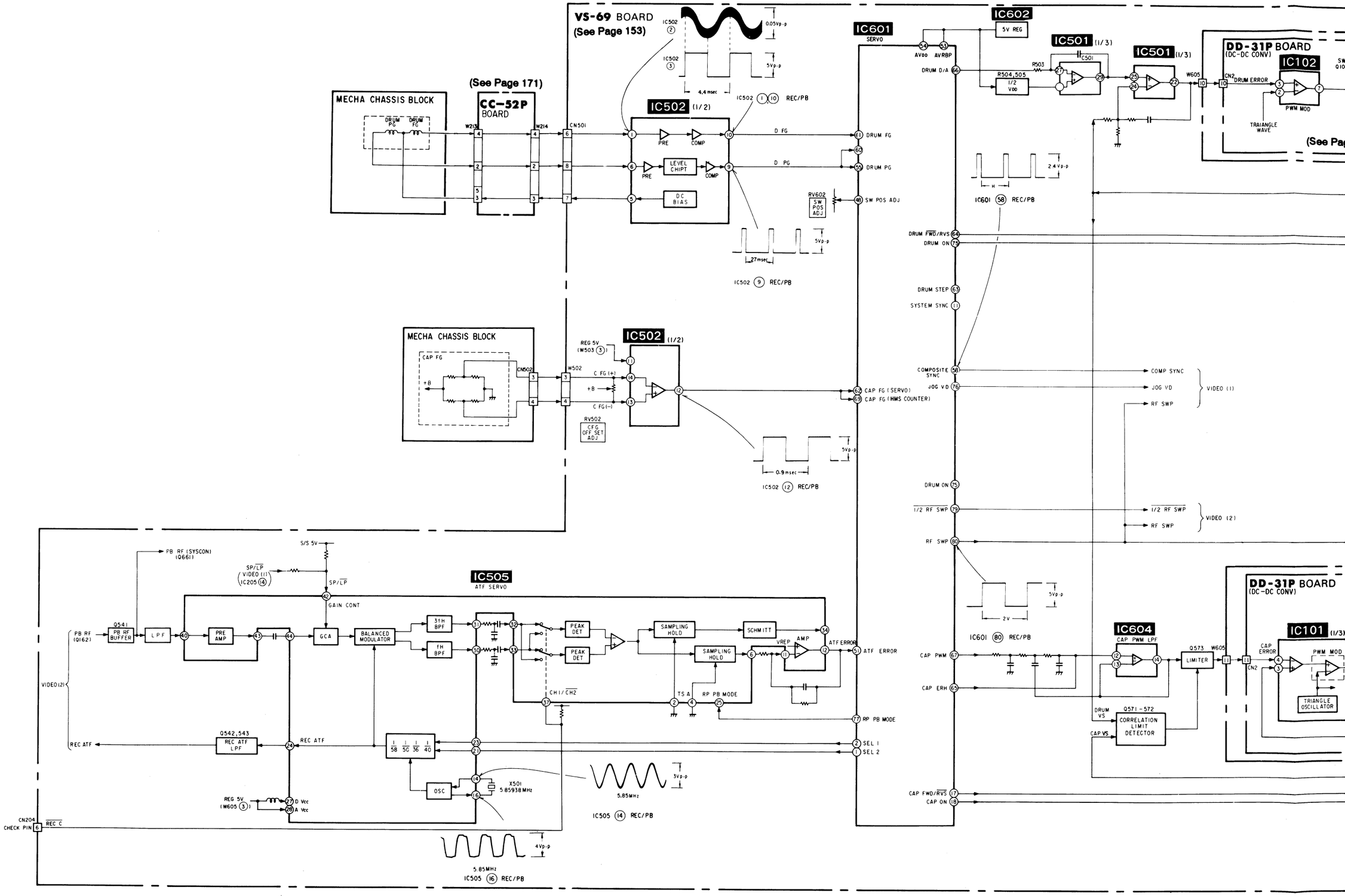

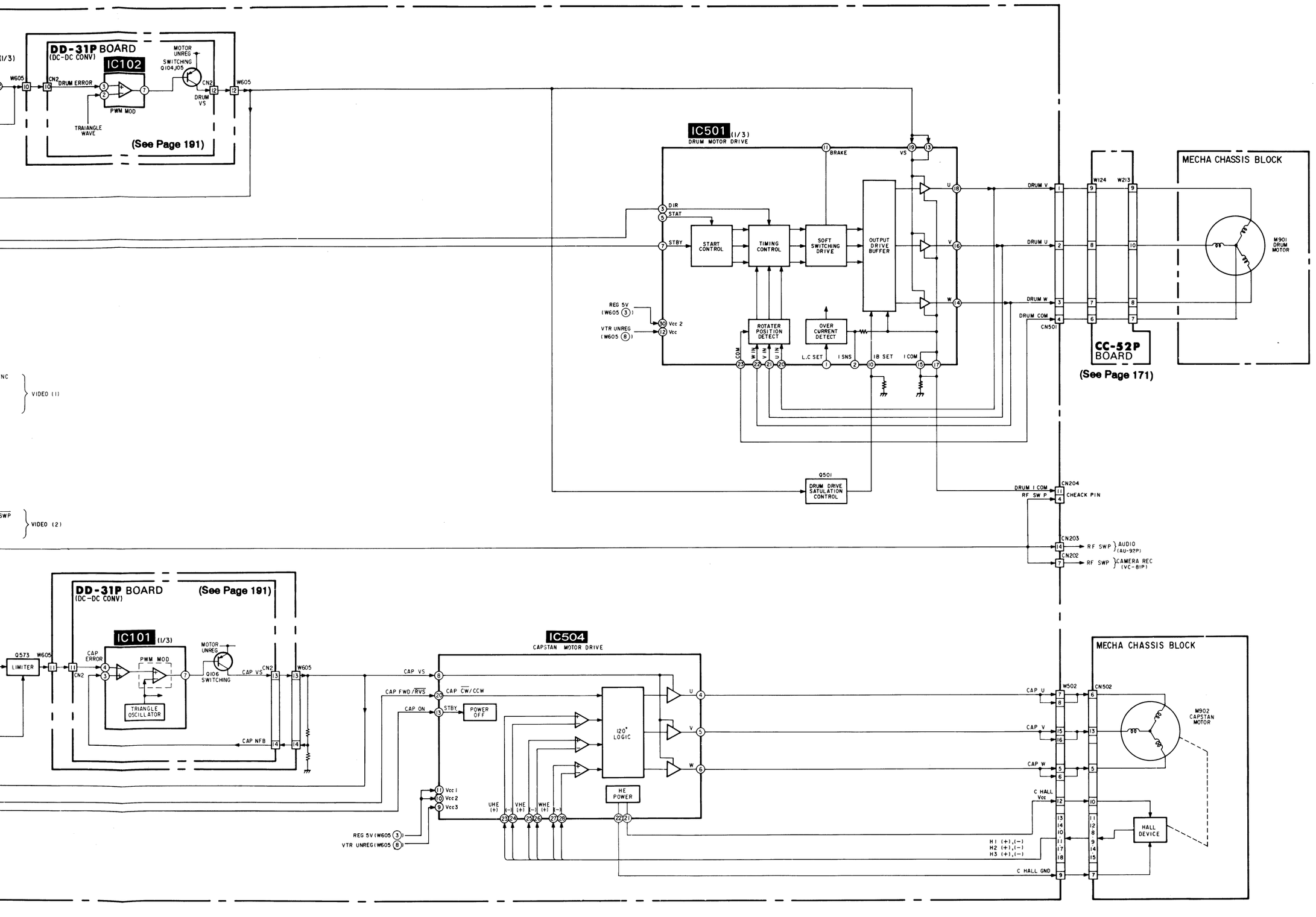
DD-31P BOARD
(DC-DC CONV)
IC102
MOTOR UNREG
SWITCHING Q104,105
DRUM ERROR
PWM MOD
TRAIANGLE WAVE
DRUM VS
(See Page 191)
IC501 (1/3)
DRUM MOTOR DRIVE
BRAKE
VS
DIR
STAT
STBY
START CONTROL
TIMING CONTROL
SOFT SWITCHING DRIVE
OUTPUT DRIVE BUFFER
REG 5V (W605 3)
VTR UNREG (W605 8)
ROTATER POSITION DETECT
OVER CURRENT DETECT
L.C SET
I SNS
IB SET
I COM
Q501
DRUM DRIVE SATULATION CONTROL
DRUM V
DRUM U
DRUM W
DRUM COM
CN501
W124
W213
CC-52P BOARD
(See Page 171)
MECHA CHASSIS BLOCK
M901 DRUM MOTOR
DRUM I COM
RF SW P
CN204
CHEACK PIN
CN203
CN202
RF SWP
AUDIO (4U-92P)
CAMERA REC (VC-81P)
VIDEO (1)
VIDEO (2)
DD-31P BOARD
(DC-DC CONV)
(See Page 191)
IC101 (1/3)
Q573
LIMITER
W605
CAP ERROR
PWM MOD
TRIANGLE OSCILLATOR
MOTOR UNREG
Q106 SWITCHING
CAP VS
CAP NFB
IC504
CAPSTAN MOTOR DRIVE
CAP FWD/RVS
CAP ON
STBY
POWER OFF
120° LOGIC
HE POWER
UHE (+)
VHE (+)
WHE (+)
REG 5V (W605 3)
VTR UNREG (W605 8)
CAP U
CAP V
CAP W
C HALL Vcc
C HALL GND
H1 (+),(−)
H2 (+),(−)
H3 (+),(−)
W502
CN502
M902 CAPSTAN MOTOR
HALL DEVICE
MECHA CHASSIS BLOCK

3-10. SYSTEM CONTROL BLOCK DIAGRAM

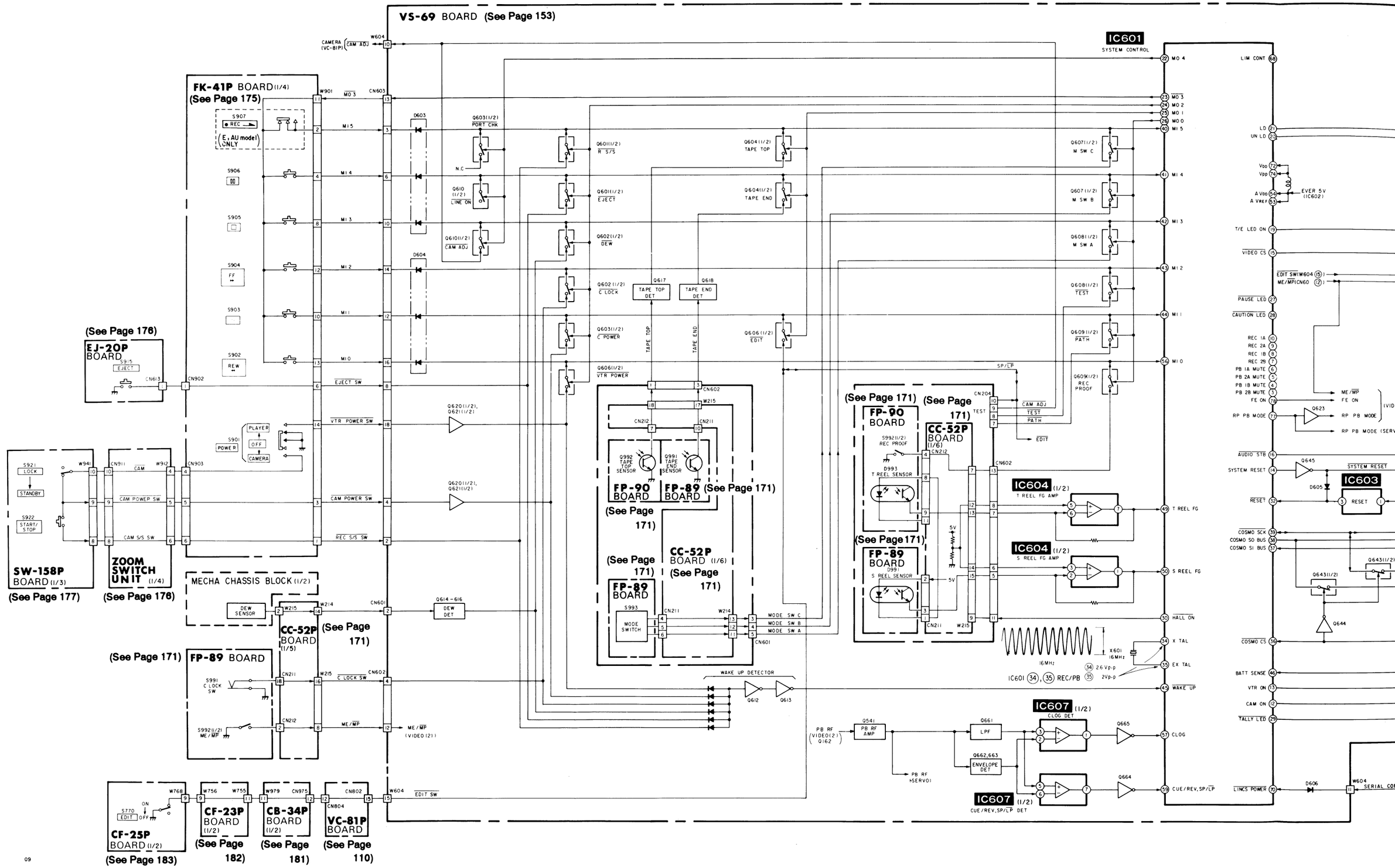

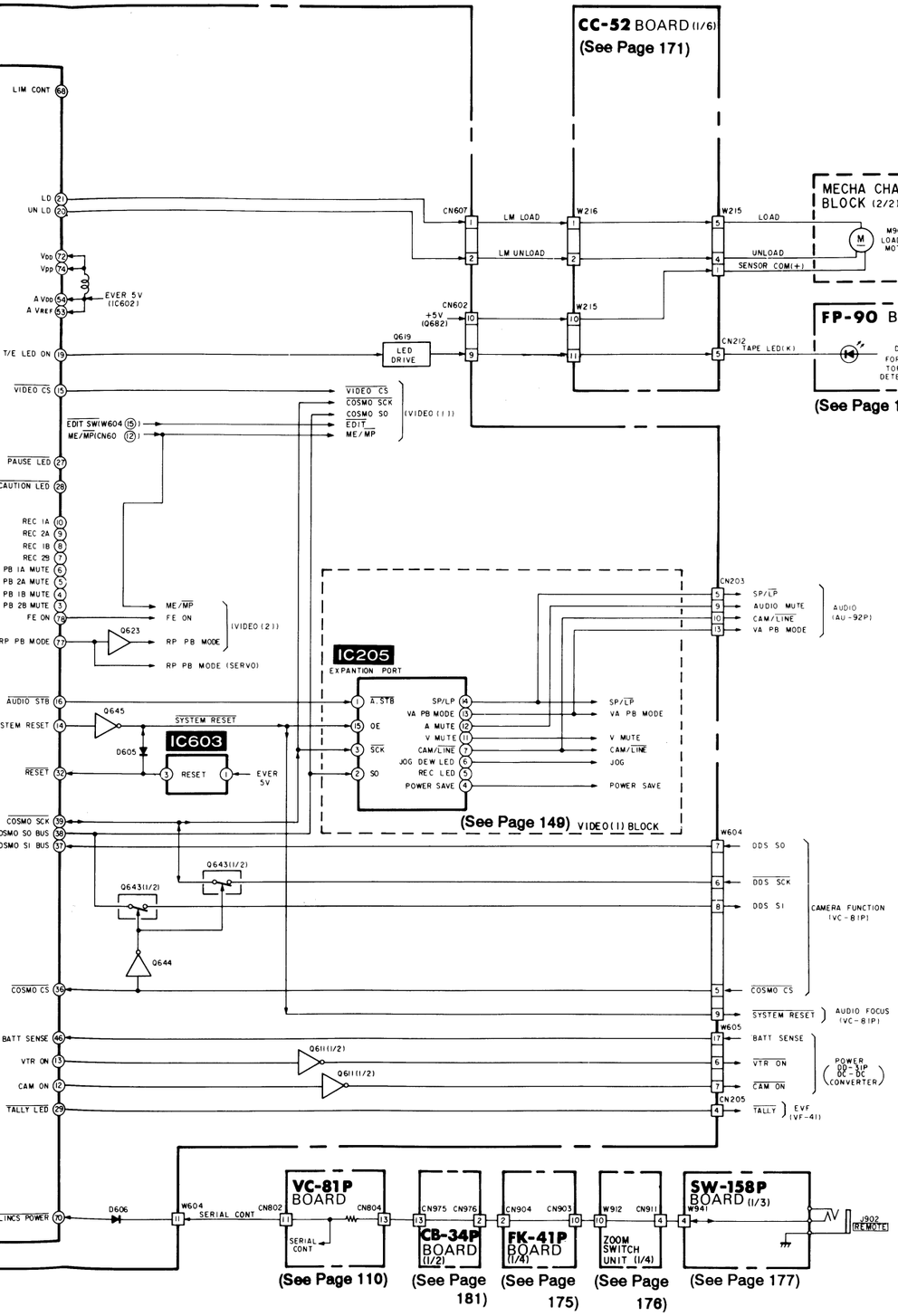
CC-52 BOARD (1/6)
(See Page 171)
MECHA CHASSIS BLOCK (2/2)
M903 LOADING MOTOR
FP-90 BOARD
D992 FOR TAPE TOP/END DETECT LED
(See Page 171)
LIM CONT
LD
UN LD
VDD
VPP
A VDD
A VREF
EVER 5V (IC602)
T/E LED ON
VIDEO CS
EDIT SW(W604)
ME/MP(CN60)
PAUSE LED
CAUTION LED
REC 1A
REC 2A
REC 1B
REC 2B
PB 1A MUTE
PB 2A MUTE
PB 1B MUTE
PB 2B MUTE
FE ON
RP PB MODE
AUDIO STB
SYSTEM RESET
RESET
COSMO SCK
COSMO SO BUS
COSMO SI BUS
COSMO CS
BATT SENSE
VTR ON
CAM ON
TALLY LED
INCS POWER
CN607
LM LOAD
LM UNLOAD
W216
W215
LOAD
UNLOAD
SENSOR COM(+)
CN602
+5V (Q682)
Q619
LED DRIVE
CN212
TAPE LED(K)
VIDEO CS
COSMO SCK
COSMO SO
EDIT
ME/MP
(VIDEO (1))
ME/MP
FE ON
Q623
RP PB MODE
RP PB MODE (SERVO)
(VIDEO (2))
IC205
EXPANTION PORT
A STB
OE
SCK
SO
SP/LP
VA PB MODE
A MUTE
V MUTE
CAM/LINE
JOG DEW LED
REC LED
POWER SAVE
(See Page 149) VIDEO(1) BLOCK
CN203
SP/LP
AUDIO MUTE
CAM/LINE
VA PB MODE
AUDIO (AU-92P)
Q645
IC603
RESET
D605
EVER 5V
Q643(1/2)
Q644
Q611(1/2)
D606
W604
SERIAL CONT
CN802
CN804
W605
CN205
DDS SO
DDS SCK
DDS SI
CAMERA FUNCTION (VC-81P)
AUDIO FOCUS (VC-81P)
BATT SENSE
VTR ON
CAM ON
POWER (DD-31P DC-DC CONVERTER)
TALLY
EVF (VF-41)
VC-81P BOARD
(See Page 110)
CB-34P BOARD (1/2)
(See Page 181)
CN975 CN976
FK-41P BOARD (1/4)
(See Page 175)
CN904 CN903
ZOOM SWITCH UNIT (1/4)
(See Page 176)
W912 CN911
SW-158P BOARD (1/3)
(See Page 177)
W941
J902 REMOTE

3-11. SYSTEM CONTROL SECTION FUNCTION DESCRIPTION

The system control section consists of following four microcomputers:

- Mode/mechanism control microcomputer CXP80116
- DDS microcomputer μPD7503GF
- EVR microcomputer MC68HC05N4
- AF microcomputer MC68HC05C4

3-11-1. Mode/Mechanism Control Microcomputer CXP80116 (IC601 on VS-69 Board)

1. Function description

1) Power ON/OFF control
2) Key matrix read
   (Playback, Record, Fast-forward, Rewind, Pause, Stop, VIDEO/CAMERA Power Supply, Cassette Eject, START/STOP)
3) Servo
4) Loading motor control
5) Error detection
   - Battery end/pre-end
   - Tape end
   - No cassette
   - Erasure prevention
   - DEW (condensation)
   - PAUSE release
   - CLOG (head clog)
   - L.MOTOR EMERGENCY
   - Drum rotation
   - Drum phase
   - Reel rotation
   - Capstan rotation
   - Drum/capstan start
6) H.M.S. counter
7) JOG VD insertion
8) Execution of various modes

2. Abbreviated specifications

- 8-bit high-speed, highly integrated single chip microcomputer
- A/D converter, 8-bit, 8-channel
- Serial interface
- Time/counter
- Time base timer
- Vector interrupts
- High precision timing pattern generation function (high-speed output)
- PWM/DA gate pulse output, 12-bit, 2-channel
- High precision measurement function (FRC) for servo signals
- Power on reset function
- Sleep and stop functions
- External memory expansion mode, microprocessor mode
- ROM: 16 Kbytes
- RAM: 352 Kbytes
- Speed: 500 ns
- Process: C MOS
- Operating voltage: 4.5 to 5.5V
- Package: 80-pin flat package

3. Terminal function (CXP80116)

Pin No.	Signal Name	I/O	Function	Connection
1	SEL 2	O	ATF REF PILOT signal frequency (f1 to f4) selecting signal. (*1) ATF REF PILOT: f1 / f2 / f3 / f4 SEL 1: H / L / H / L SEL 2: H / H / L / L	To ATF servo IC (IC505: CXA1204Q)
2	SEL 1	O		
3	PB 2B MUTE	O	Not used. Fixed at "L".	
4	PB 1B MUTE	O		
5	PB 2A MUTE	O		
6	PB 1A MUTE	O		
7	$\overline{\text{REC 2B}}$	O	Not used. Fixed at "H".	
8	$\overline{\text{REC 1B}}$	O		
9	$\overline{\text{REC 2A}}$	O		
10	$\overline{\text{REC 1A}}$	O		
11	SYSTEM SYNC	O	INT-V signal for drum servo. (*1)	
12	CAM ON	O	Camera DC/DC converter on/off signal. "H" when power of camera is turned on.	To DC/DC converter
13	VTR ON	O	VTR DC/DC converter on/off signal. "H" when power of camera or video is turned on.	To DC/DC converter
14	SYSTEM RESET	O	Reset AF microcomputer during Power ON, and input to video/audio extension port (IC205) to mute audio signal during Power ON.	Pin ⑨ of IC612 and Pin ⑩ of IC613 on VC-81P board, Pin ⑮ of IC205 on VS-63 board.
15	$\overline{\text{VIDEO CS}}$	O	Selecting signal to video IC, CXA1200BQ and CXA1201Q of internal bus signal. Select by "L".	Pin ㉑ of IC201 Pin ⑰ of IC203
16	$\overline{\text{AUDIO STB}}$	O	Data strobe signal to video/audio extension port (IC205) of internal bus communication. Latch by ⌟.	Pin ① of IC205
17	CAP FWD/$\overline{\text{RVS}}$	O	Capstan rotation direction control signal. FWD by "H", RVS by "L". (*1)	Pin ⑳ of IC504
18	CAP ON	O	Capstan driver ON control signal. Capstan ON by "H". (*1)	Pin ⑬ of IC504
19	T/E LED ON	O	TAPE top/end LED driving signal.	Q619Ⓑ
20	UNLOAD	O	Loading motor control signal Signals \ Conditions: OFF / LOADING / UN-LOADING / BRAKE LOAD: L / H / L / H UNLOAD: L / L / H / H	To loading motor
21	LOAD	O		To loading motor
22	MO4	O	Only Matrix output $\overline{\text{MO3}}$ is "L" active. Only $\overline{\text{MO3}}$ is "L" pulse output, the other ports are "H" pulse output.	
23	$\overline{\text{MO3}}$	O		
24	MO2	O		
25	MO1	O		
26	MO0	O		
27	$\overline{\text{PAUSE LED}}$	O	Not used.	Pin ② of Pause LED driver Q624
28	$\overline{\text{CAUTION LED}}$	O	Not used.	Pin ⑤ of Caution LED driver Q624
29	$\overline{\text{TALLY LED}}$	O	External TALLY LED and EVF internal TALLY drive. "L" when TALLY LED is lit.	TALLY LED

Middle withstand voltage (12V), Large current (12 mA) port.

nnection
servo IC CXA1204Q)
C converter
C converter
IC612 and IC613 on board, Pin ⑮ of VS-63 board.
IC201 IC203
IC205
IC504
IC504
g motor
g motor
Pause LED 24
Caution LED 24
LED

Pin No.	Signal Name	I/O	Function	Connection
30	$\overline{\text{HALL ON}}$	O	Reel FG sensor LED drive, middle withstand voltage and large current port. 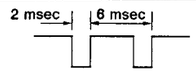	Reel sensor
31	MP	I	Microcomputer processor mode selecting pin → unselecting.	GND
32	$\overline{\text{RESET}}$	I	Reset input. "L" active.	Pin ③ of reset IC IC603
33	V_{SS}		GND	GND
34	XTAL	O	Crystal connecting pin for system clock oscillation. Oscillation at: 16 MHz.	Oscillation crystal X601
35	EXTAL	I		
36	$\overline{\text{COSMO CS}}$	I	Selecting signal from DDS microcomputer of internal bus communication to mode/mechanism control. Selected by "L".	DDS microcomputer Pin ⑭ of IC561 on VC-81P board
37	COSMO SI BUS	I	Serial data input pin.	
38	COSMO SO BUS	O	Serial data output pin.	
39	$\overline{\text{COSMO SCK}}$	I/O	Input/output pin for serial clock.	
40	MI 5	I	Matrix input.	
41	MI 4			
42	MI 3			
43	MI 2			
44	MI 1			
45	$\overline{\text{WAKE UP}}$	I	STBY release input. Released by "L".	
46	BATT SENSE	I	Battery end/pre-end voltage input. A/D input pin.	Inside BATT END ADJ (DD-31P board RV101)
47	N.C.			
48	SW POS ADJ	I	Switching position adjustment input (Test mode). A/D input pin	SW POS ADJ RV602
49	T REEL FG	I	T-reel/S-reel FG input. A/D input pin.	Pin ⑦ of IC604
50	S REEL FG	I		Pin ① of IC604
51	ATF ERROR	I	ATF error (ATF LOCK error)input. A/D input pin.	Pin ⑫ of ATF IC IC505
52	AV_{SS}		A/D converter GND pin.	GND
53	AV_{REF}	I	A/D converter reference voltage input pin	Pin ① of regulator IC IC602 for EVER 5V
54	AV_{DD}		A/D converter positive power supply pin	
55	DRUM PG	I	DRUM PG input. FRC (High precision timer)capture input pin.	Pin ⑨ of Sense amp IC502
56	MI 0	I	Matrix input	
57	CLOG	I	Clog detection signal input. Clog by "H".	Q665 Ⓒ
58	COMPOSITE SYNC	I	Composite sync signal input (Incorporated V SYNC separator)	Pin ⑭ of VIDEO IC IC201
59	CUE/$\overline{\text{REV}}$ SP/$\overline{\text{LP}}$	I	SP/LP discrimination signal input when CUE/REV, etc. "H" when SP mode, "L" when LP mode.	Q664 Ⓒ
60	DRUM PG	I	Not used.	Pin ⑨ of Sense amp IC502
61	DRUM FG	I	DRUM FG input pin. FRC capture input pin.	Pin ⑩ of Sense amp IC502
62	CAP FG	I	CAPSTAN FG input pin. FRC capture input pin.	Pin ⑫ of Sense amp IC502

Pin No.	Signal Name	I/O	Function	Connection
63	DRUM STEP	O	Not used.	
64	DRUM $\overline{\text{FWD}}$/RVS	O	DRUM rotation direction control signal. RVS by "H", FWD by "L".	Pin ③ of IC501
65	CAP ERH	O	H level output pin to set capstan error to maximum level when capstan start and stop.	Pin ⑫ of IC604
66	DRUM D/A	O	DA gate pulse output pin to output DRUM error. Exclusive servo output pin (DA mode).	
67	CAP PWM	O	PWM output pin servo exclusive output pin to output cap error (PWM mode)	
68	LIM CONT	O	Not used.	
69	CAP FG	I	External event input pin to Cap FG input pin exclusive counter for Tape counter drive	Pin ⑫ of Sense amp IC502
70	$\overline{\text{LINCS POWER}}$	I	Input to release microcomputer standby to turn on the unit from external with remote commander.	Remote jack Pin ② of J941 on SW-158P board
71	$\overline{\text{NMI}}$	I	Non-maskable interrupt request pin. NMI is not used.	EVER 5V
72	V_{DD}		Positive power supply pin	EVER 5V
73	V_{SS}		GND pin.	GND
74	V_{PP}		N.C.	EVER 5V
75	DRUM ON	O	DRUM driver ON control signal.	Pin ⑦ of IC501
76	JOG VD	O	Insert to VIDEO signal when variable speed playback. Simulated VD output pin. (*1)	Pin ⑤ of IC201
77	RP PB MODE	O	Switching signals for REC/PB amplifier and REC/PB mode of ATF IC. (*1)	ATF IC Pin ㉕ of IC505 REC/PB amp (IC101, IC102)
78	$\overline{\text{FE ON}}$	O	RF SWP output pin (*1)	Flying erase oscillation circuit
79	RF SWP	O	RF SWP output pin. (*1)	REC/PB amp
80	RF SWP	O	RF SWP output pin. (*1)	REC/PB amp Video system

*1: High precision real time pattern output and high precision real time pulse output terminal

3-11-2. DDS microcomputer μPD7503GF (IC561 on VC-81P Board)

1. Function description

1) Internal data communication control
2) Date/time measurement
3) LCD indication
4) Reading of key matrix
   (White balance, electronic shutter, edit search +/–, auto-lock, focus mode, counter reset, zero memory, title, store, color/mode, backlight, compensation, date/forward, time/set, fader)

2. Operation modes

- As shown in the chart below, the operation mode is shifted according to the position of the power switch (Camera/off/Video) and whether or not there is a main battery.

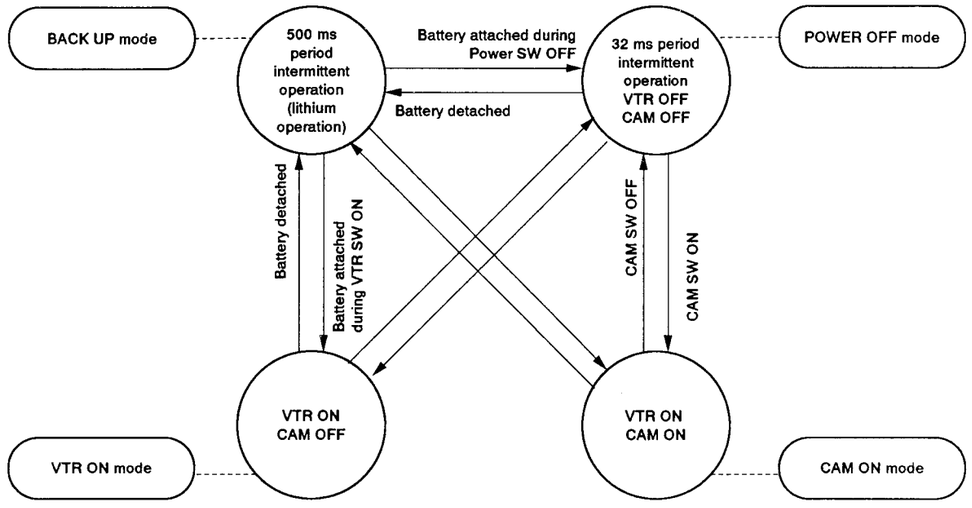

- **The main DDS microcomputer functions in each mode is as follows.**

Mode	Main Battery	Power Switch	Microcomputer power supply	Clock Mode	LCD	EVF	Main Functions
BACK UP	No	Camera/ off/ video	LI 3V (Lithium battery)	500 ms period intermittent oscillation	–	–	• Backup of title and tape counter data • Clock count operation
POWER OFF	Yes	Off	EVER 5V (Main battery)	32 ms period intermittent oscillation	○	–	• Counter/date/time indication to LCD • Date/time set function (Zero memory and counter reset are invalid.)
VTR ON	Yes	Video	EVER 5V + SS 5V (Main battery)	Continuous oscillation	○	–	• Serial communication with EVR and mode/mechanism control microcomputer • Indication to LCD • Acceptance of zero memory and counter reset keys
CAM ON	Yes	Camera	EVER 5V + SS 5V (Main battery)	Continuous oscillation	○	○	• VTR ON functions and all camera features • Indication control for white balance, focus, titles, electronics shutter, etc. • Indication to EVF and LCD

3. Terminal function and input/output level (μPD7503GF)

Pin No.	Signal Name	I/O	Functions and I/O Level
1	——	–	
2	$\overline{\text{CMO 2}}$	O	Key matrix output signal. "L" pulse of 22 ms (VTR mode) or 1V period (camera mode).
3	$\overline{\text{CMO 1}}$	O	
4	$\overline{\text{CMO 0}}$	O	
5	DDS SI	I	Serial communication and data input. V period "L" pulse train.
6	DDS SO	O	Serial communication and data output. V period "H" pulse train.
7	$\overline{\text{DDS SCK}}$	I/O	Serial communication and serial clock input/output. V period "L" pulse train.
8	$\overline{\text{TEST}}$	I	Test mode input. Normally "H".
9	$\overline{\text{LI PE}}$	I	Lithium battery pre-end detection. Normally "H". "L" when lithium battery voltage drops.
10	VTR PWR	I	SS 5V power detection. "H" when power on.
11	CG BUSY	I	Busy signal input from character generator. V period "H" pulse train.
12	CMO 4	O	Key matrix output signal. "H" pulse of 22 ms (VTR mode) or 1V period (camera mode).
13	$\overline{\text{EVR CS}}$	O	Chip select signal to EVR microcomputer (IC361 on VC-81P board). "L" pulse of 1V period.
14	$\overline{\text{COSMO CS}}$	O	Chip select signal to servo/system control microcomputer (IC601 on VS-69 board). "L" pulse of 1V period.
15	CG STB	O	Strobe signal for character generator. 1V period "H" pulse train.
16	TG CS	O	Not used.
17	SRAM CS	O	Chip select signal to static RAM. VTR mode: "L" Camera mode: Normally "L". "H" during title operation.
18	TITLE CS	O	Chip select signal to title controller. VTR mode: "L" Camera mode: "H" pulse of 1V period.
19	LCD OFF	O	LCD indication ON/OFF control output. Normally "L" (0V). "H" (3V) when backed up by lithium battery.
20	X2	O	Crystal oscillation circuit for clock. Oscillation frequency is 32.768 kHz
21	X1	I	
23	VLC 3	I	LCD power supply 3 input pin. Normally 0V. 3V when backed up.
24	VLC 2	I	LCD power supply 2 input pin. Normally 1.7V. 3V when backed up.
25	VLC 1	I	LCD power supply 1 input pin. Normally 3.3V. 3V when backed up.
26	VDD	I	Power supply input pin.
27	COM 3	O	LCD remote control pin driving output 3. 4 values outputs of 0, 1.7, 3.3, 5V.
28	COM 2	O	LCD remote control pin driving output 2.
29	COM 1	O	LCD remote control pin driving output 1.
30	COM 0	O	LCD remote control pin driving output 0.

Pin No.	
31	
32 to 40	
41 to 54	S1
55	IN
56	RE
57	CL
59	CL
58	VI
60	CM
61	CM
62	CM
63	CM
64	$\overline{\text{CO}}$

Pin No.	Signal Name	I/O	Functions and I/O Level
31		I	
32 to 40	———	I	Not used
41 to 54	S13 to S0	O	LCD segment pin driving output, 13 to 0. 4 values outputs of 0, 1.7, 3.3, 5V.
55	INT 1	I	Interrupt input by camera VD. VTR mode: "H". Camera mode: "H" pulse of 1V period.
56	RESET	I	Normally "L".
57	CL 1	I	System clock oscillation pin. • When video power ON or camera power ON: Continuous oscillation (Oscillation frequency: approx. 330 kHz). • When power OFF: 32 ms period intermittent oscillation (Oscillation frequency: approx. 330 kHz) • When backed up by lithium battery: 500 ms period intermittent oscillation (Oscillation frequency: approx. 70 kHz)
59	CL 2	I	
58	VDD	O	Power supply input pin.
60	CMI 3	I	Key matrix input signal. Normally "H". When key input, "L" pulse of 22 ms (VTR mode) or 1V period (camera mode).
61	CMI 2	I	
62	CMI 1	I	
63	CMI 0	I	
64	$\overline{\text{COM 3}}$	I	Key matrix input signal. Normally "H". When key input, "L" pulse of 22 ms (VTR mode) or 1V period (camera mode).

3-11-3. EVR microcomputer MC68HC05N4 (IC361 on VC-81P Board)

1. Function description

1) EVR control
2) Auto white balance control
3) Electronic shutter

2. Pin function and input/output level (MC68HC05N4)

Pin No.	Signal Name	I/O	Functions and I/O Level
1	———		———
2	$\overline{SSW}$	O	"H" only during communicating with serial switching D/A converter. "H" pulse of V period.
3	$\overline{SCLK}$	O	Serial clock output. V period "L" pulse train.
4	SI	I	Serial data input. V period "H" pulse train.
5	SO	O	Serial data output. V period "L" pulse train.
6	$\overline{EVR\ CS}$	I	Communication request from DDS. "L" pulse of V period.
7	L IN	I	LANC input. L: 0, H: 1. V period "H" pulse train.
8	L OUT	O	LANC output. L: 0, H: 1. V period "H" pulse train.
9	$\overline{CAM\ ADJ}$	I	NORMAL/ADJUST selection. Normally "H". "L" during adjustment.
10		O	
11	SSW	O	Serial signal switching. "L" pulse of V period.
12, 13	LD	O	Data load instruction to EVR (IC252, IC302). "H" pulse of V period.
14	$\overline{BACK\ LIGHT}$	O	"L" during backlight compensation ON.
15	IRIS I/O	I	Control from AF microcomputer, Indoor (IN): H, outdoor (OUT): L according to brightness.
16	———		
17	V_{DD}		Connected to EVER 5V.
18			GND
19	———	–	
20	PAL/$\overline{NTSC}$	I	Broadcast system selection. L: NTSC, H: PAL.
21	TG STB	O	Strobe signal to timing generator (VC-81P board, DT-77LX board) Camera mode: pulse of 1V period.
22~25	GND		———
26	GND	–	———
27	GND	–	———
28	CAM 5V	I	Camera power on monitoring. L: CAM OFF, H: CAM ON.
29	AW IN	I	AWB A/D timer stop. Pattern drive interrupt. Normally 2V period pulse.
30	AW ADJ	O	AWB preset data fetch. Normally "L". "H" during auto white balance adjustment.
31	———	–	NC
32	———	–	———
33	———	–	———
34	S3SW	O	AWB measurement signal selection. "H" pulse of 3V period.
35	S2SW	O	AWB measurement signal selection. "H" pulse of 3V period.
36	DISCHG	O	Capacitor reset pulse for timer measurement lamp voltage generation. "H" pulse of V period.
37	———	–	———
38	S1SW	O	AWB measurement signal selection. "H" pulse of 3V period.
39	———	–	———
40	OSC2	O	Built-in inverter output for oscillation. Oscillation frequency: 4 MHz.
41	OSC1	I	Built-in inverter input for oscillation.
42	V_{DD}		Connected to EVER 5V.
43	———		———
44	$\overline{RESET}$		Normally "H". "L" when reset.
45	$\overline{IRQ}$		Connected to $\overline{EVR\ CS}$ signal. "L" pulse of V period.
46	———	–	Normally "H". "L" when reset.
47	———	–	Normally "H". "L" when reset.
48	$\overline{A/D\ EN}$	O	1-bit A/D converter operation ON/OFF output for titler. Normally "H". "L" for 7V period when title memory button is pressed.

3-11-4. AF microcomputer MC68HC05C4 (IC613 on VC-81P Board)

1. Function description

1) AF control
2) Power focus
3) Zoom motor drive

2. Auto focus system of this unit (Λ -AF: Image processing system)

The high frequency components of video signal (actually luminance signal) are microcomputer processed by TTL without using external sensors to control the focus).

3. Outline of operation

The frequency components from 100k to 2 MHz and from 1M to 2 MHz are extracted from the luminance (Y) signal, and these are digitally integrated for each field. This integration value is called the evaluation value. This evaluation value becomes the information for auto focusing, and focus ring is controlled by finding the peaks in the evaluation values based on the concepts that:

Picture is in focus → edges of image become clearer → high frequency components of image increase → evaluation value increases

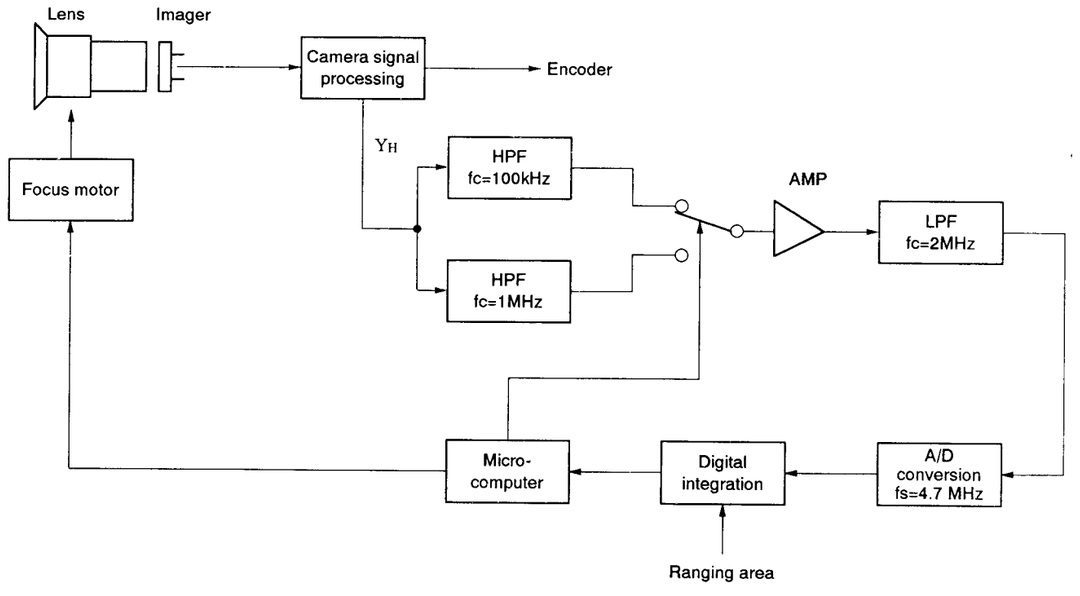

4. Pin

Pin No.
1
2
3
4
5
6
7
8
9
10
11
12
13
14
15
16
17
18
19
20
21
22
23
24
25
26
27
28
29
30
31
32
33
34
35
36
37
38
39
40
41
42
43
44

4. Pin function and input/output level (MC68HC05C4)

Pin No.	Signal Name	I/O	Functions and I/O Level
1	$\overline{SS}$ OUT	O	EVR data read timing output (PD5 SS input). V period "L" pulse train.
2	IRIS I/O	O	Indoors/outdoors determination according to aperture value. "H" for indoors and "L" for outdoors.
3	LED CONT	O	Focus position detect LED drive signal. V period "H" pulse.
4			
5			
6	$\overline{MACRO}$	O	Signal to DDS microcomputer (IC561 on VC-81P board). "L" when zoom ring is at MACRO position.
7	———	–	
8			Not used.
9	———	–	
10	———	–	
11	$\overline{ZOOM\ T}$	O	Normally "H". "L" when zoom motor is rotated in telephoto direction.
12	$\overline{ZOOM\ W}$	O	Normally "H". "L" when zoom motor is rotated in wide angle direction.
13	Focus N	O	Normally "L". "H" when focus motor is rotated in far range direction.
14	———	–	
15	Focus F	O	Normally "L". "H" when focus motor is rotated in close range direction.
16	F SPD ϕ	O	Not used.
17	———	–	
18	F SPD1	O	Not used.
19	F SPD2	O	Not used.
20	———	–	
21	F SPD3	O	Not used.
22	———	–	
23	Vss	–	Connected to GND.
24	Vss	–	Connected to GND.
25	———	–	
26	$\overline{F\ SENS\ 1}$	I	Focus position detection signal. V period "H" pulse when focus ring is between about 1.3m and 3m.
27	———	–	
28	WINDOW	O	Auto focus window signal. V period "H" pulse.
29	———	–	
30	$\overline{F\ SENS\ 2}$	I	Focus position detection signal. V period "H" pulse when focus ring is between about 2m and ∞ .
31	AF SSW	O	Timing output for bus selection. "H" pulse of V period.
32	———	–	
33	DA STB	O	D/A converter for AF. For data latch. V period "H" pulse train.
34	PAL/$\overline{NTSC}$	I	PAL/NTSC selection.
35	———	–	
36	$\overline{J\ STB}$	O	External display jig. For data latch. "L" pulse of V period.
37	XCS	O	Active "L" for communication request to IC612 CXD-1204. "L" pulse of V period.
38	PD0	I	Connected to V_{DD}.
39	———	–	
40	PD1	I	Connected to V_{DD}.
41	MISO	I/O	SPI MASTER: in...SLAVE: out...V period "H" pulse train.
42	MOSI	I/O	SPI MASTER: out...SLAVE: in...V period "L" pulse train.
43	$\overline{SCK}$	I/O	SPI SERIAL CLOCK. V period "L" pulse train.
44	———	–	
45	$\overline{SS}$	I	V period "L" pulse train.
46	———	–	
47	———	–	
48	$\overline{EVR\ CS}$	I	EVR data communication request ㄱ from DDS microcomputer. "L" pulse of V period.
49	———	–	
50	———	–	
51	$\overline{Focus\ FG}$	I	Interrupt generation by Focus motor FG ㄱ . "L" when auto focus OFF. "H" pulse of period according to focus motor rotation speed when auto focus ON.
52	CLK OUT	O	Waveform shaped output of Pin ㊹ clock (1.77 MHz)
53	———	–	
54	CLK IN	I	External clock input. 14.2 MHz clock input to Pin ㉘ of IC612 is divided by 8 input.
55	V_{DD}		CAM 5V
56	———	–	
57	———	–	
58	———	–	
59	———	–	
60	$\overline{SYS\ RST}$	I	Normally "H". "L" when resetting.
61	AREA	I	Interrupt generation by ㄱ from CXD-1204 (IC612). V period pulse
62	V_{PP}		CAM 5V
63	EXT A/M	I	Connected to V_{DD} by 100 kΩ
64	———	–	

3-12. INTERFACE

3-12-1. System Control — Video Audio Block Interface

Signal Name	I/O	Pin No.	VTR Mode												CAMERA Mode					
			STOP	FF	REW	FR SEARCH		PB	PICTURE SEARCH		PB• PAUSE	FRAME	SLOW	REC *14	REC *14 PAUSE	STAND BY	REC	EDIT SEARCH		REC REVIEW	
						CUE	REVIEW		CUE	REVIEW								FWD	RVS	FWD	RVS
SP/$\overline{LP}$	O	Pin ⑭ of IC205 on VS-69 board	1	H	H	*2	*2	*2	*2	*2	*1	*1	*1	*15	H	*16	*15	*2	*2	H	H
VA PB MODE	O	Pin ⑬ of IC205 on VS-69 board	L	L	L	H	H	H	H	H	H	H	H	L	L	L	L	H	H	H	H
AUDIO MUTE	O	Pin ⑫ of IC205 on VS-69 board	L	L	L	H	H	L *3	H	H	H	H	H	L	L	L	L	H	H	L	H
VIDEO MUTE	O	Pin ⑪ of IC205 on VS-69 board	L	L	L	L	L	L *3	L	L	L	L	L	L	L	L	L	L	L	L	L
CAM/$\overline{LINE}$	O	Pin ⑦ of IC205 on VS-69 board	L	L	L	L	L	L	L	L	L	L	L	L	L	H	H	H	H	H	H
JOG/DEW LED	O	Pin ⑥ of IC205 on VS-69 board	L *4	L	L	H	H	L	H	H	H	H	H	L	L	L	L	L	H	L	H
$\overline{REC\ LED}$ *13	O	Pin ⑤ of IC205 on VS-69 board	H	H	H	H	H	H	H	H	H	H	H	L	L	H	H	H	H	H	H
POWER SAVE	O	Pin ④ of IC205 on VS-69 board	H	H	H	L	L	L	L	L	L	L	L	L	H	H	L	L	L	L	L
JOG VD	O	Pin ⑯ of IC601 on VS-69 board	L	L	L	*5	*5	H	*5	*5	*5	*5	*5	L	L	L	L	L	*5	L	*5
RP PB MODE	O	Pin ⑰ of IC601 on VS-69 board	H	H	H	H	H	H	H	H	H	H	H	L	H	H	L	H	H	H	H
$\overline{FE\ ON}$	O	Pin ⑱ of IC601 on VS-69 board	H	H	H	H	H	H	H	H	H	H	H	L	H	H	L	H	H	H	H
$\overline{RF\ SWP}$	O	Pin ⑲ of IC601 on VS-69 board	H/L	*6	*6	*6	*6	*6	*6	*6	*6	*6	*6	*6	*6	*6	*6	*6	*6	*6	*6
RF SWP	O	Pin ⑳ of IC601 on VS-69 board	H/L	*7	*7	*7	*7	*7	*7	*7	*7	*7	*7	*7	*7	*7	*7	*7	*7	*7	*7
PB 2B MUTE	O	Pin ③ of IC601 on VS-69 board	*8	*8	*8	*8	*8	*8	*8	*8	*8	*8	*8	*8	*8	*8	*8	*8	*8	*8	*8
PB 1B MUTE	O	Pin ④ of IC601 on VS-69 board																			
PB 2A MUTE	O	Pin ⑤ of IC601 on VS-69 board																			
PB 1A MUTE	O	Pin ⑥ of IC601 on VS-69 board																			

Signal Name	I/O	Pin No.	VTR Mode												CAMERA Mode					
			STOP	FF	REW	FR SEARCH		PB	PICTURE SERACH		PB• PAUSE	FRAME	SLOW	REC *14	REC *14 PAUSE	STAND BY	REC	EDIT SEARCH		REC REVIEW	
						CUE	REVIEW		CUE	REVIEW								FWD	RVS	FWD	RVS
REC2B	O	Pin ⑦ of IC601 on VS-69 board	*9	*9	*9	*9	*9	*9	*9	*9	*9	*9	*9	*9	*9	*9	*9	*9	*9	*9	*9
REC1B	O	Pin ⑧ of IC601 on VS-69 board																			
REC2A	O	Pin ⑨ of IC601 on VS-69 board																			
REC1A	O	Pin ⑩ of IC601 on VS-69 board																			
$\overline{\text{VIDEO CS}}$	O	Pin ⑮ of IC601 on VS-69 board	"L" pulse of V period.																		
$\overline{\text{AUDIO STB}}$	O	Pin ⑯ of IC601 on VS-69 board																			
COSMO SO	O	Pin ㊳ of IC601 on VS-69 board	V period pulse train.																		
$\overline{\text{COSMO SCK}}$	I/O	Pin ㊴ of IC601 on VS-69 board																			
CUE/REV SP/$\overline{\text{LP}}$	I	Pin ㊾ of IC601 on VS-69 board	H	*10	*10	*10	*10	L	*10	*10	*10			H	H/L	H/L	H	L	*10	L	*10
CLOG	I	Pin ㊼ of IC601 on VS-69 board	H	*11	*11	*11	*11	*11	*11	*11	*11	*11	*11	*11	H			H	*11	*11	*11
COMPOSITE SYNC	I	Pin ㊽ of IC601 on VS-69 board	*12	*12	*12	*12	*12	*12	*12	*12	*12	*12	*12	*12	*12	*12	*12	*12	*12	*12	*12

*1. Outputs the determination result of last mode. SP mode "H", LP mode "L".
*2. Outputs the determination result of recording mode of playback tape.
SP mode "H", LP mode "L".
*3. "H" at non signal portion of tape
*4. "H" after mode shift completion during dew condensation generation.
*5. Simulated VD signal
*6. 25 Hz duty 50% pulse (synchronized to drum rotation)
*7. 25 Hz duty 50% pulse (synchronized to drum rotation)

*8. Not used. Fixed at "L".
*9. Not used. Fixed at "H".
*10. "H" at SP recording portion of tape, "L" at LP recording portion.
*11. "H" at non recording portion of tape, or drop-out portion. Head clog detection input.
*12. Composite sync signal input (polarity=+) separated from line input video signal, camera video signal, or playback video signal.
*13. Not used.
*14. Effectively for the model installed REC switch.
*15. According to the LP/SP switch position. "H" when the SP position. "L" when the LP position.
*16. According to the LP/SP switch position. "H" when the SP position. "L/H" when the LP position.

3-12-2. System Control — Servo Block Interface

Signal Name	I/O	Pin No.	VTR Mode												CAMERA Mode					
			STOP	FF	REW	FR SEARCH		PB	PICTURE SEARCH		PB• PAUSE	FRAME	SLOW	REC	REC PAUSE	STAND BY	REC	EDIT SEARCH		REC REVIEW	
						CUE	REVIEW		CUE	REVIEW								FWD	RVS	FWD	RVS
T.REEL FG	I	Pin ㊾ of IC601 on VS-69 board	–	*1	*1	*1	*1	*1	*1	*1	*1	*1	*1	*1	–	–	*1	*1	*1	*1	*1
S.REEL FG	I	Pin ㊿ of IC601 on VS-69 board	–	*1	*1	*1	*1	*1	*1	*1	*1	*1	*1	*1	–	–	*1	*1	*1	*1	*1
ATF ERROR	I	Pin 51 of IC601 on VS-69 board	–	*2	*2	*2	*2	*2	*2	*2	*2	*2	*2	*2	*2	*2	*2	*2	*2	*2	*2
DRUM PG	I	Pins 55 and 60 of IC601 on VS-69 board	–	*3	*3	*3	*3	*3	*3	*3	*3	*3	*3	*3	*3	*3	*3	*3	*3	*3	*3
DRUM FG	I	Pin 61 of IC601 on VS-69 board	–	*4	*4	*4	*4	*4	*4	*4	*4	*4	*4	*4	*4	*4	*4	*4	*4	*4	*4
CAP FG	I	Pins 62 and 69 of IC601 on VS-69 board	–	*5	*5	*5	*5	*5	*5	*5	*5	*5	*5	*5	*5	*5	*5	*5	*5	*5	*5
CAP ON	O	Pin 18 of IC601 on VS-69 board	L	H	H	H	H	H	H	H	L	*15	*15	H	L	L	H	H	H	H	H
SEL 2	O	Pin ① of IC601 on VS-69 board	–	–	–	*7	*7	*8	*7	*7	*9	*9	*10	*6	H	H	*6	*8	*11	*8	*11
SEL 1	O	Pin ② of IC601 on VS-69 board	–	–	–	*7	*7	*8	*7	*7	*9	*9	*10	*6	L	L	*6	*8	*11	*8	*11
DRUM STEP *12	O	Pin 63 of IC601 on VS-69 board	L	L	L	L	L	L	L	L	L	L	L	L	L	L	L	L	L	L	L
DRUM $\overline{\text{FWD}}$/ RVS *13	O	Pin 64 of IC601 on VS-69 board	L	L	L	L	L	L	L	L	L	L	L	L	L	L	L	L	L	L	L
CAP ERH *14	O	Pin 65 of IC601 on VS-69 board	–	HIZ	HIZ	HIZ	HIZ	HIZ	HIZ	HIZ	HIZ	*15	*15	HIZ	HIZ	HIZ	HIZ	HIZ	HIZ	HIZ	HIZ
DRUM D/A	O	Pin 66 of IC601 on VS-69 board	–	*16	*16	*16	*16	*16	*16	*16	*16	*16	*16	*16	*16	*16	*16	*16	*16	*16	*16
CAP PWM	O	Pin 67 of IC601 on VS-69 board	–	*17	*17	*17	*17	*17	*17	*17	*17	*17	*17	*17	*17	*17	*17	*17	*17	*17	*17
LIM CONT *12	O	Pin 68 of IC601 on VS-69 board	L	L	L	L	L	L	L	L	L	L	L	L	L	L	L	L	L	L	L
DRUM ON	O	Pin 75 of IC601 on VS-69 board	L	H	H	H	H	H	H	H	H	H	H	H	H	H	H	H	H	H	H

*1. Pulse is input by reel rotation.
*2. ATF error voltage input.
*3. 1 PG pulse is input with 1 rotation of drum. Approx. 25 Hz.
*4. 12 FG pulses are input with 1 rotation of drum. Approx. 300 Hz.
*5. Pulses of frequency in proportion to tape speed. Approx. 1327 Hz during REC/PB (SP).
*6. See timing chart 1.
*7. See timing chart 3.
*8. See timing chart 2.
*9. See timing chart 5.
*10. See timing chart 5.
*11. See timing chart 4.
*12. Not used.
*13. Normally "L". "H" temporarily only when loading/unloading (Drum inverts.)
*14. Normally HIZ (High impedance). "H" during start and stop of capstan
*15. "H" pulse when tape is advanced.
*16. "H" pulse/"L" pulse output as center level HIZ (2.5 Vdc).
*17. 64 μsec period PWM signal
*18. Effectively for the model installed REC switch.

3-12-3. Timing Chart

Timing chart 1. REC

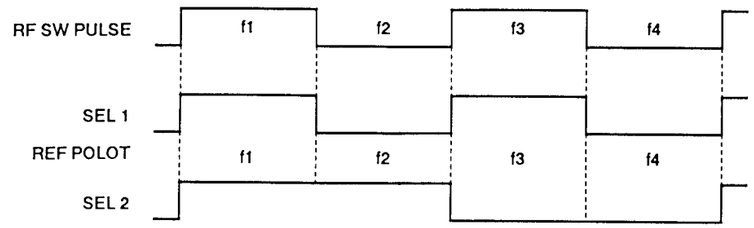

Timing chart 2. PB EDIT-SEARCH (FWD), REC-REVIEW (FWD)

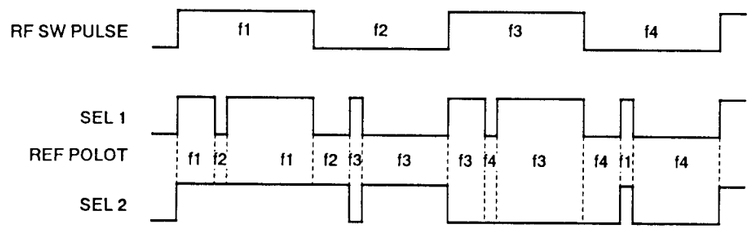

Timing chart 3. FR-SEARCH (CUE/REV), PICTURE-SEARCH (CUE/REV)

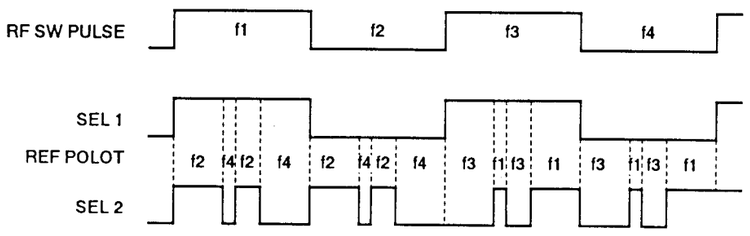

Timing chart 4. EDIT-SEARCH (RVS), REC-REVIEW (RVS)

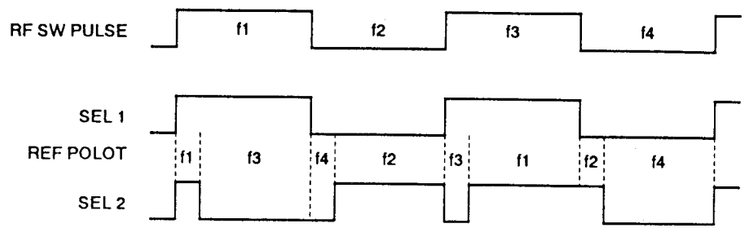

Timing chart 5. PB-PAUSE, FRAME, SLOW

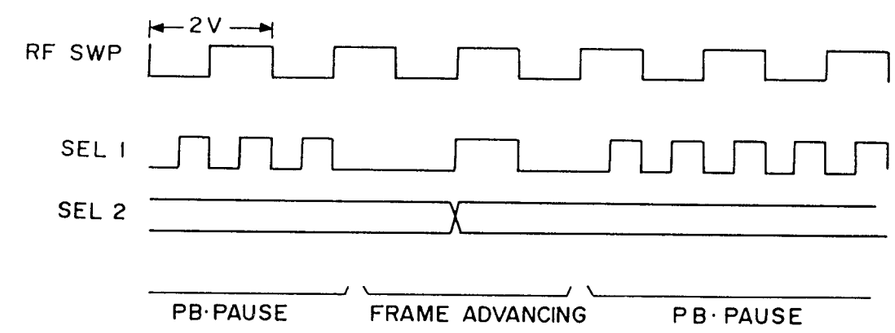

3-13. AUDIO BLOCK DIAGRAM

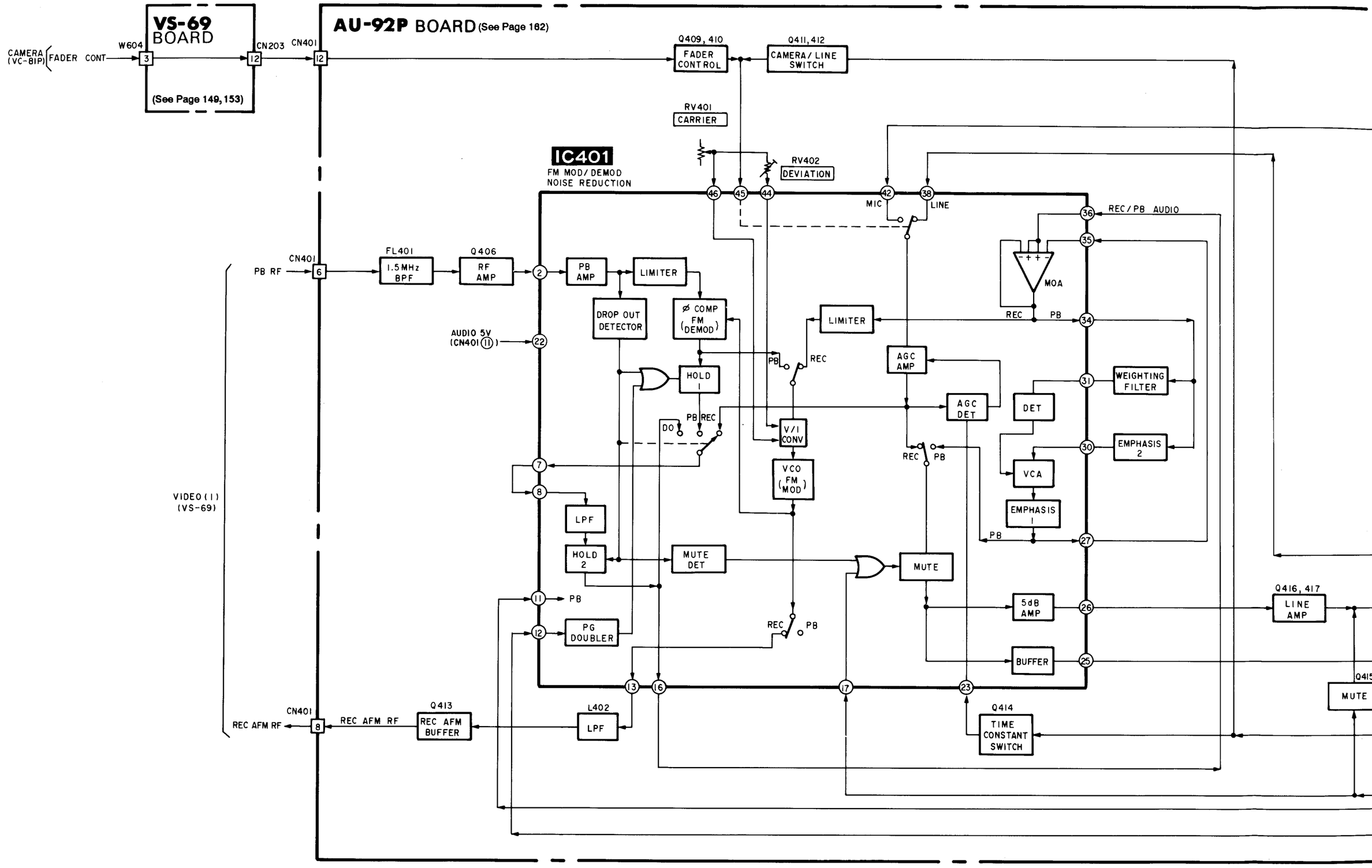

09

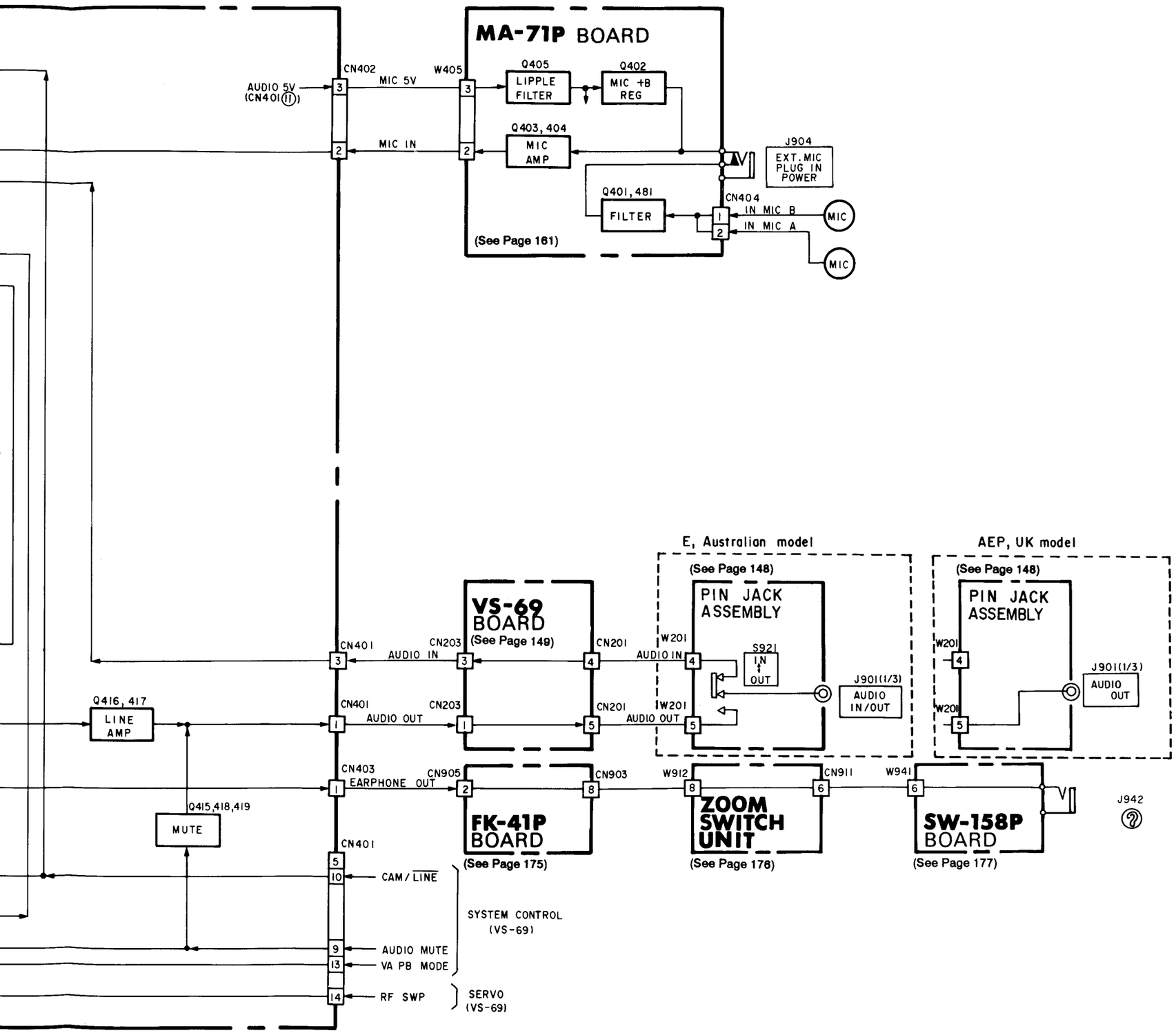
MA-71P BOARD
AUDIO 5V (CN401 11)
CN402
3
MIC 5V
W405
3
Q405
LIPPLE FILTER
Q402
MIC +B REG
2
MIC IN
2
Q403, 404
MIC AMP
J904
EXT. MIC PLUG IN POWER
Q401, 481
FILTER
CN404
1
IN MIC B
MIC
2
IN MIC A
MIC
(See Page 161)
E, Australian model
AEP, UK model
(See Page 148)
(See Page 148)
PIN JACK ASSEMBLY
PIN JACK ASSEMBLY
W201
4
S921
IN
OUT
J901(1/3)
AUDIO IN/OUT
W201
4
J901(1/3)
AUDIO OUT
W201
5
W201
5
VS-69 BOARD
(See Page 149)
CN401
3
CN203
AUDIO IN
3
CN201
4
AUDIO IN
Q416, 417
LINE AMP
CN401
1
CN203
AUDIO OUT
1
CN201
5
AUDIO OUT
CN403
1
EARPHONE OUT
CN905
2
FK-41P BOARD
(See Page 175)
8
CN903
W912
8
ZOOM SWITCH UNIT
(See Page 176)
6
CN911
W941
6
SW-158P BOARD
(See Page 177)
J942
Q415,418,419
MUTE
CN401
5
10
CAM/LINE
SYSTEM CONTROL (VS-69)
9
AUDIO MUTE
13
VA PB MODE
14
RF SWP
SERVO (VS-69)

3-14. VIEWFINDER BLOCK DIAGRAM

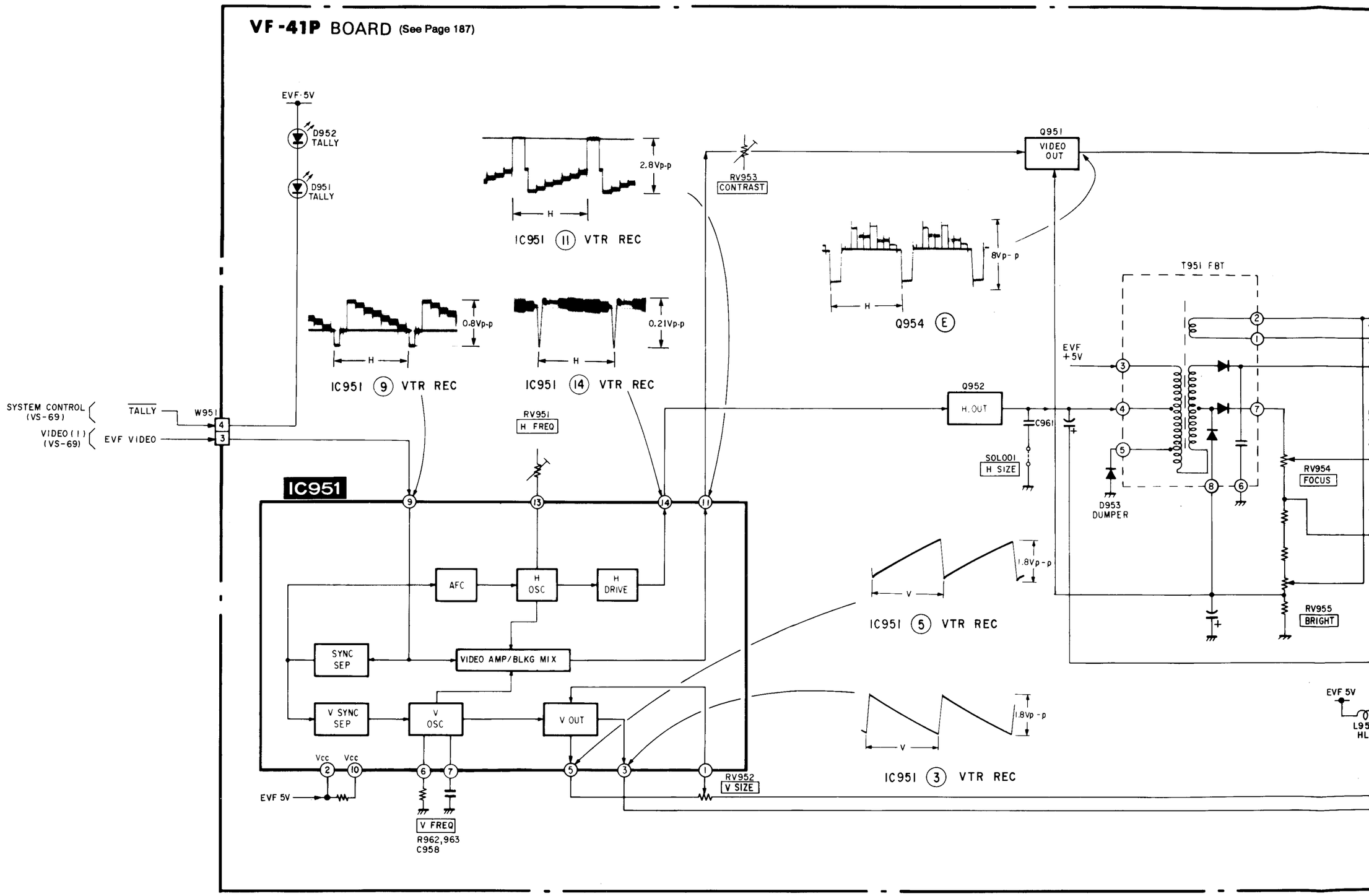

3-14. VIEWFINDER BLOCK DIAGRAM

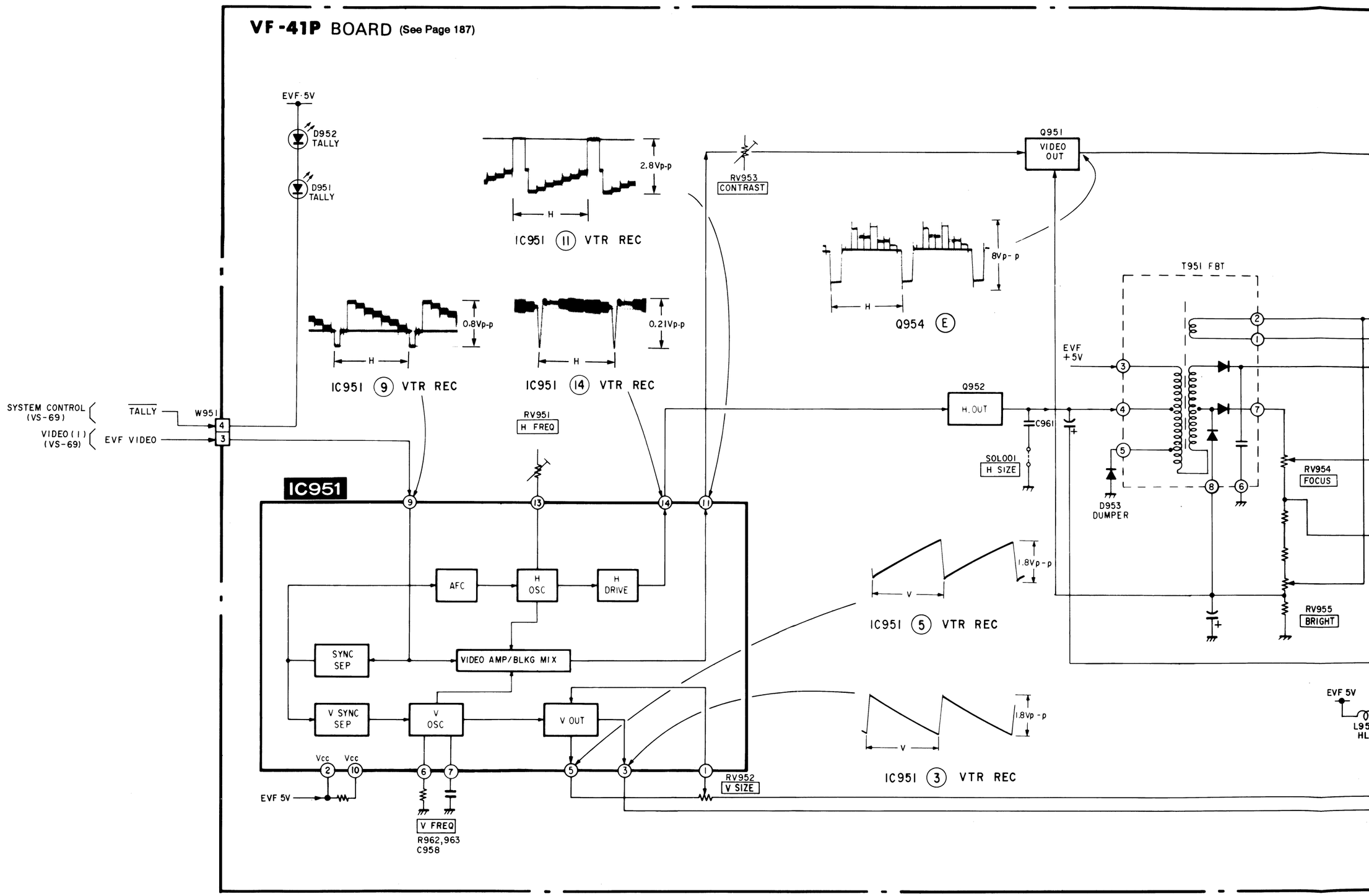

09

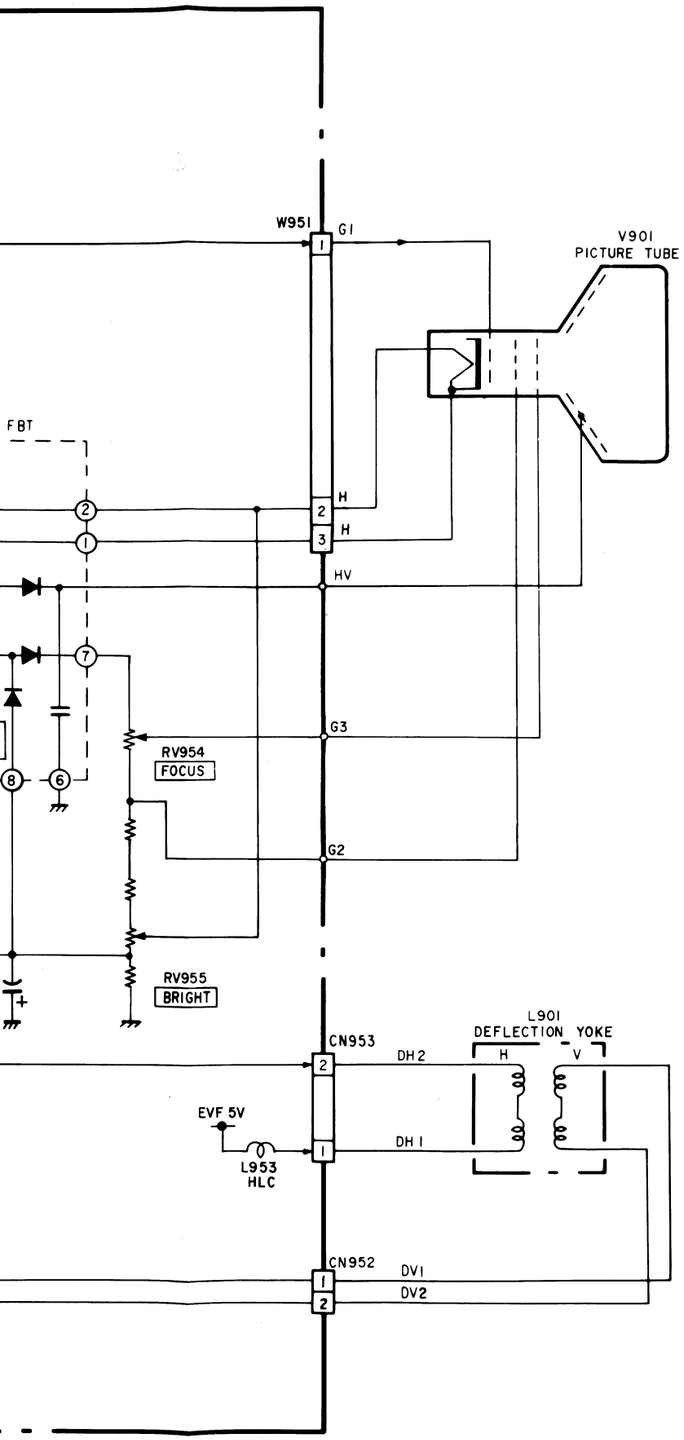
W951
G1
V901
PICTURE TUBE
FBT
H
H
HV
G3
RV954
FOCUS
G2
RV955
BRIGHT
L901
DEFLECTION YOKE
H
V
CN953
DH2
EVF 5V
DH1
L953
HLC
CN952
DV1
DV2

3-15. POWER BLOCK DIAGRAM

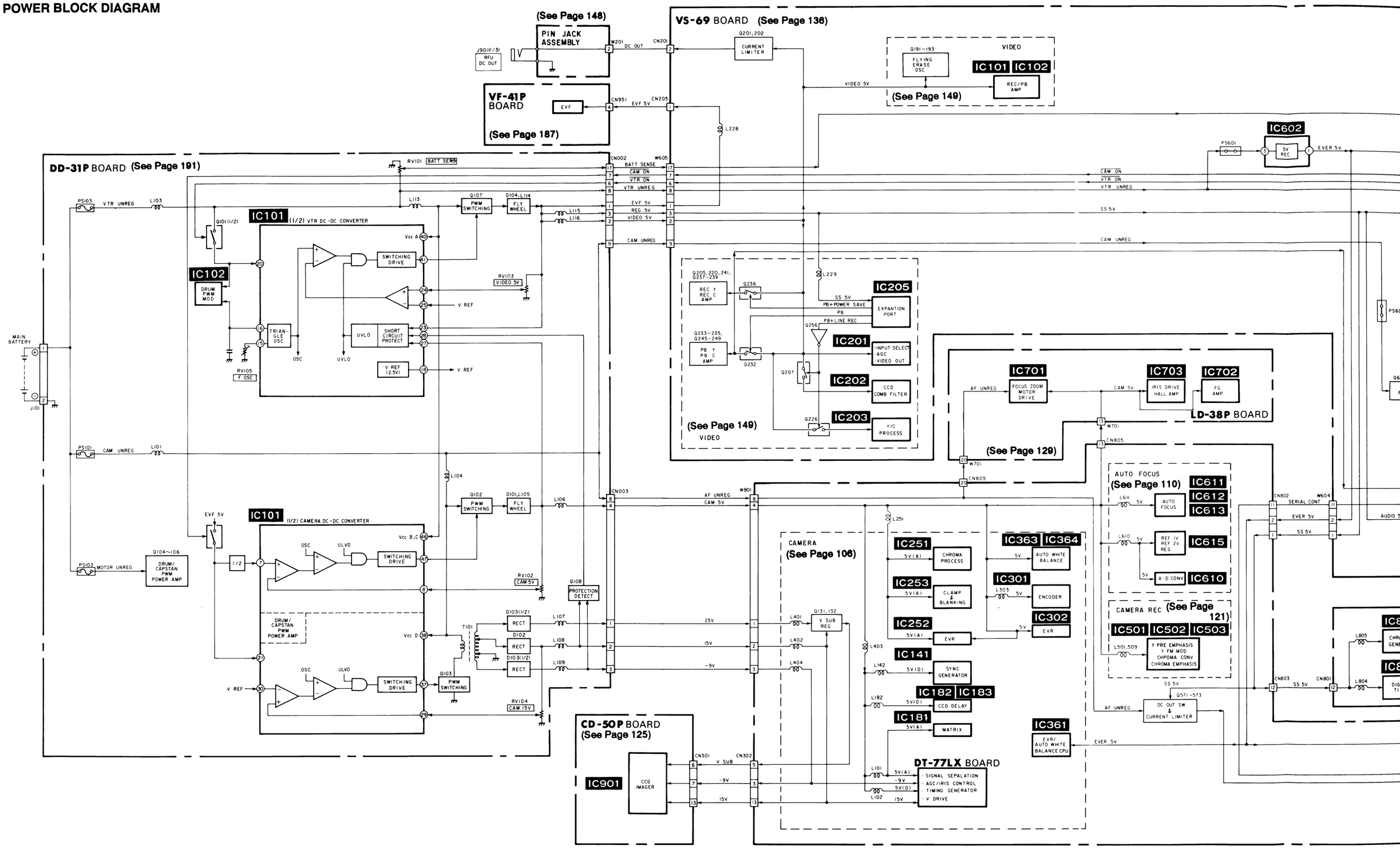

09

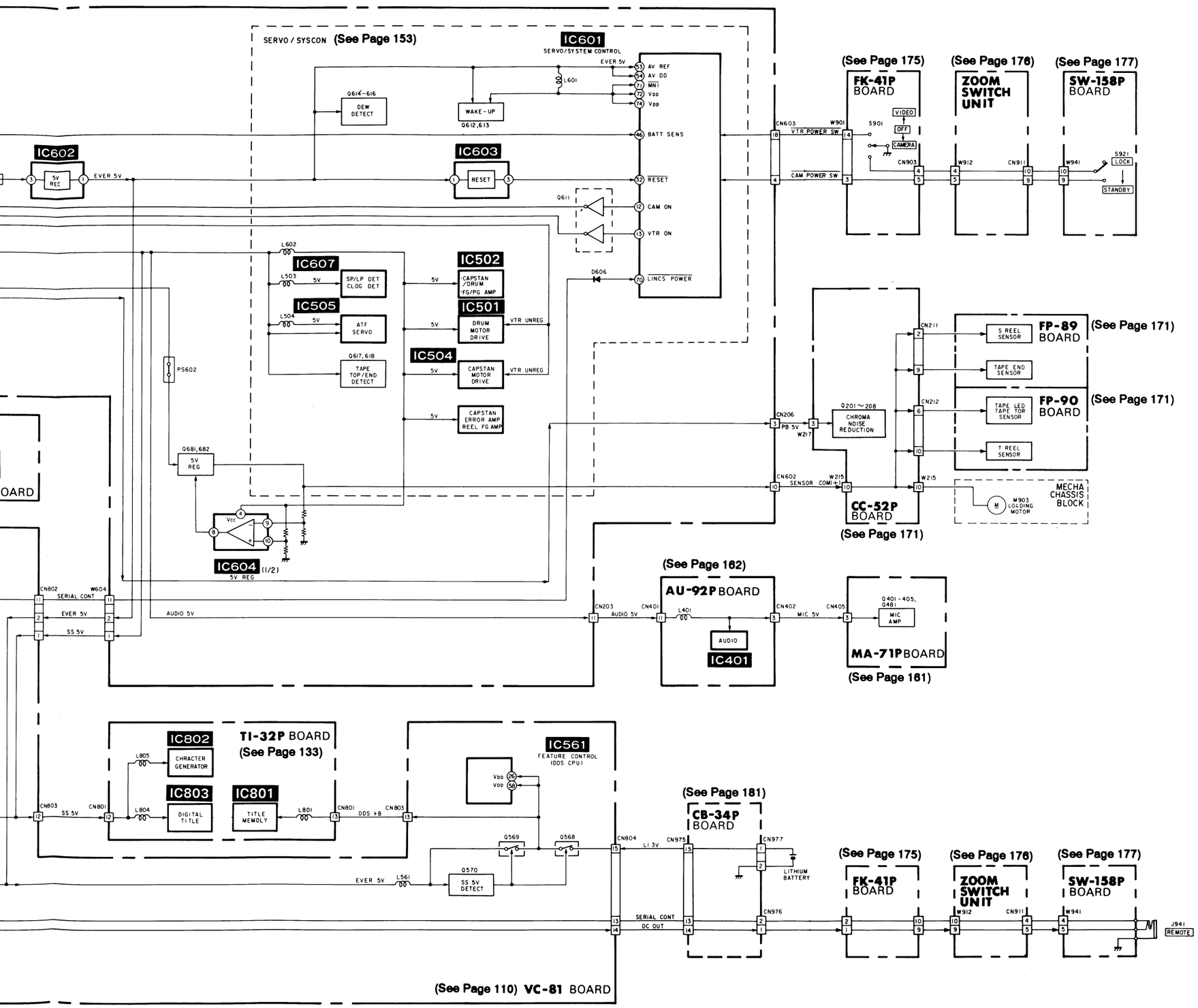
SERVO / SYSCON (See Page 153)
IC601
SERVO/SYSTEM CONTROL
EVER 5V
AV REF
AV DD
MNT
Vdd
Vpp
Q614-616
DEW DETECT
WAKE-UP
Q612,613
L601
BATT SENS
IC602
5V REG
EVER 5V
IC603
RESET
RESET
Q611
CAM ON
VTR ON
D606
LINCS POWER
L602
IC607
L503
5V
SP/LP DET CLOG DET
IC505
L504
5V
ATF SERVO
Q617,618
TAPE TOP/END DETECT
IC502
CAPSTAN /DRUM FG/PG AMP
IC501
DRUM MOTOR DRIVE
VTR UNREG
IC504
CAPSTAN MOTOR DRIVE
VTR UNREG
CAPSTAN ERROR AMP REEL FG AMP
PS602
Q681,682
5V REG
IC604 (1/2)
5V REG
CN802
W604
SERIAL CONT
EVER 5V
SS 5V
AUDIO 5V
CN603
W901
VTR POWER SW
CAM POWER SW
S901
VIDEO
OFF
CAMERA
CN903
W912
CN911
W941
S921
LOCK
STANDBY
(See Page 175)
FK-41P BOARD
(See Page 176)
ZOOM SWITCH UNIT
(See Page 177)
SW-158P BOARD
CN206
PB 5V
W217
Q201~208
CHROMA NOISE REDUCTION
CN211
S REEL SENSOR
TAPE END SENSOR
FP-89 BOARD
(See Page 171)
CN212
TAPE LED TAPE TOR SENSOR
T REEL SENSOR
FP-90 BOARD
(See Page 171)
CN602
SENSOR COM
W215
CC-52P BOARD
(See Page 171)
MECHA CHASSIS BLOCK
M903 LOADING MOTOR
(See Page 162)
AU-92P BOARD
CN203
AUDIO 5V
CN401
L401
CN402
MIC 5V
CN405
Q401-405, Q481
MIC AMP
AUDIO
IC401
MA-71P BOARD
(See Page 161)
IC802
CHRACTER GENERATOR
L805
IC803
DIGITAL TITLE
L804
IC801
TITLE MEMOLY
L801
TI-32P BOARD
(See Page 133)
CN803
SS 5V
CN801
DDS +B
IC561
FEATURE CONTROL (DDS CPU)
Vdd
Vdd
Q569
Q568
Q570
SS 5V DETECT
EVER 5V
L561
CN804
LI 3V
CN975
CN977
LITHIUM BATTERY
CN976
SERIAL CONT
DC OUT
(See Page 181)
CB-34P BOARD
(See Page 175)
FK-41P BOARD
(See Page 176)
ZOOM SWITCH UNIT
(See Page 177)
SW-158P BOARD
J941
REMOTE
(See Page 110) VC-81 BOARD

SECTION 4
PRINTED WIRING BOARDS AND SCHEMATIC DIAGRAMS

4-1. FRAME SCHEMATIC DIAGRAM

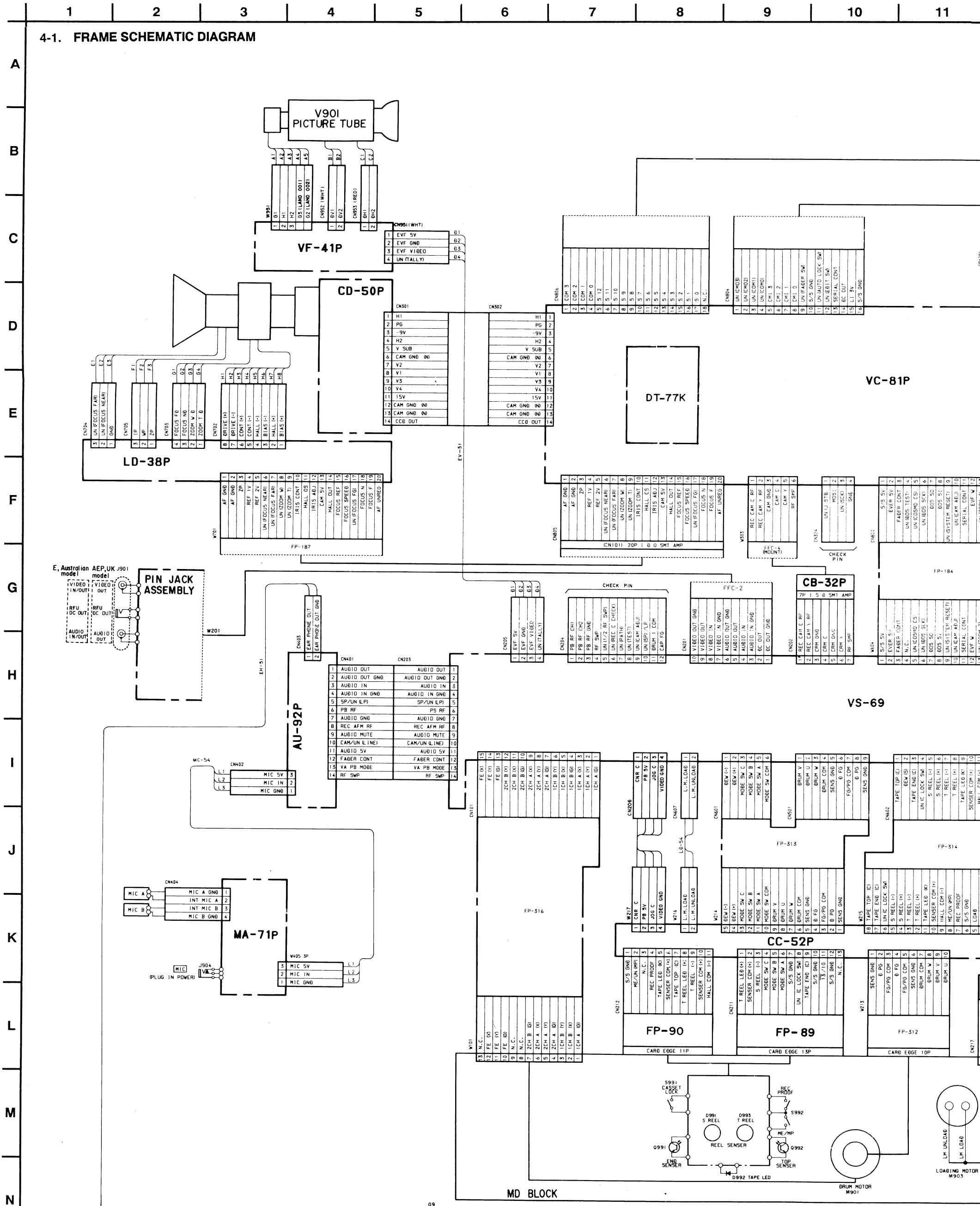

FRAME FRAME

9 | 10 | 11 | 12 | 13 | 14 | 15 | 16 | 17 | 18 | 19 | 20

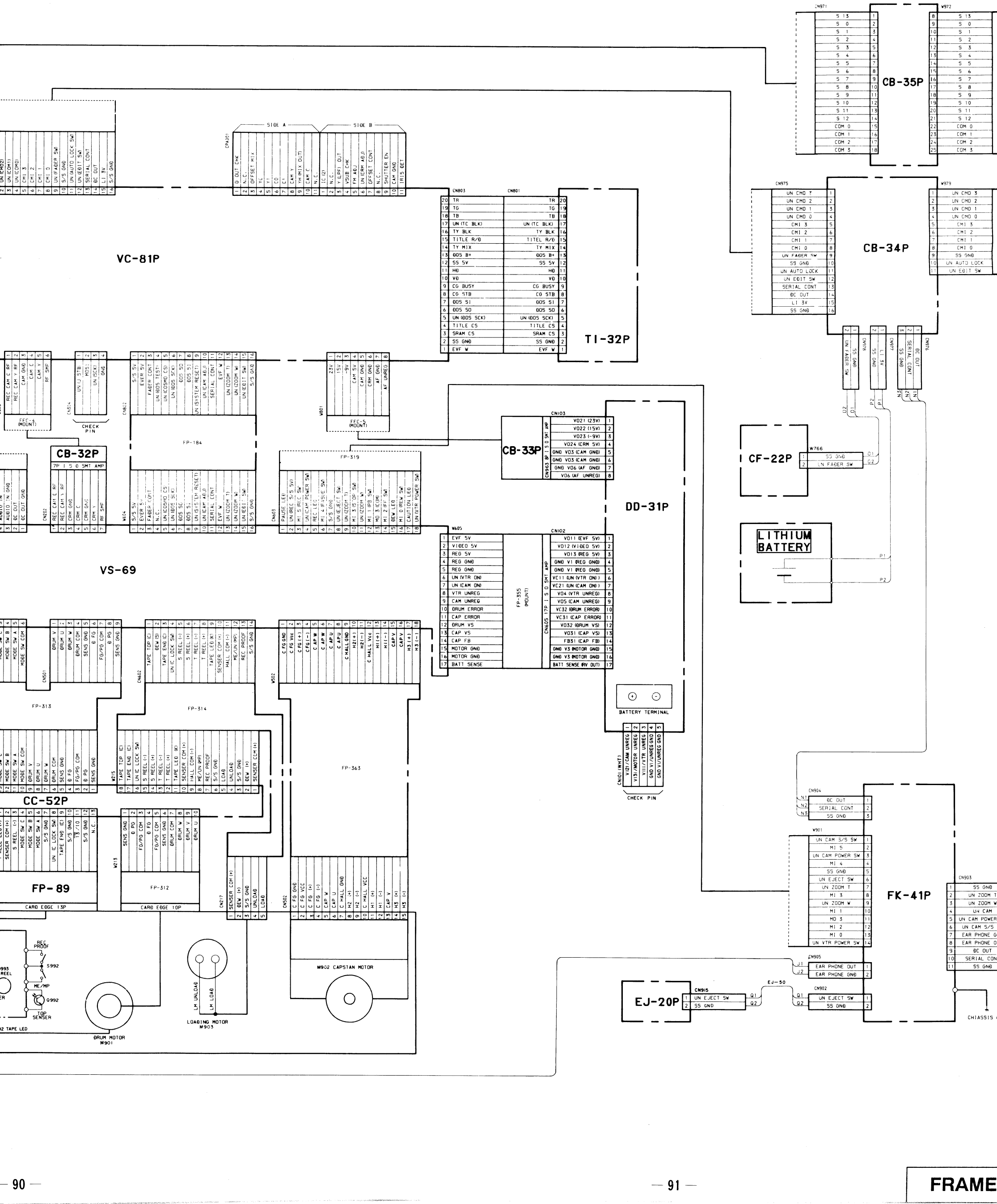

17 | 18 | 19 | 20 | 21 | 22 | 23 | 24 | 25 | 26 | 27 | 28

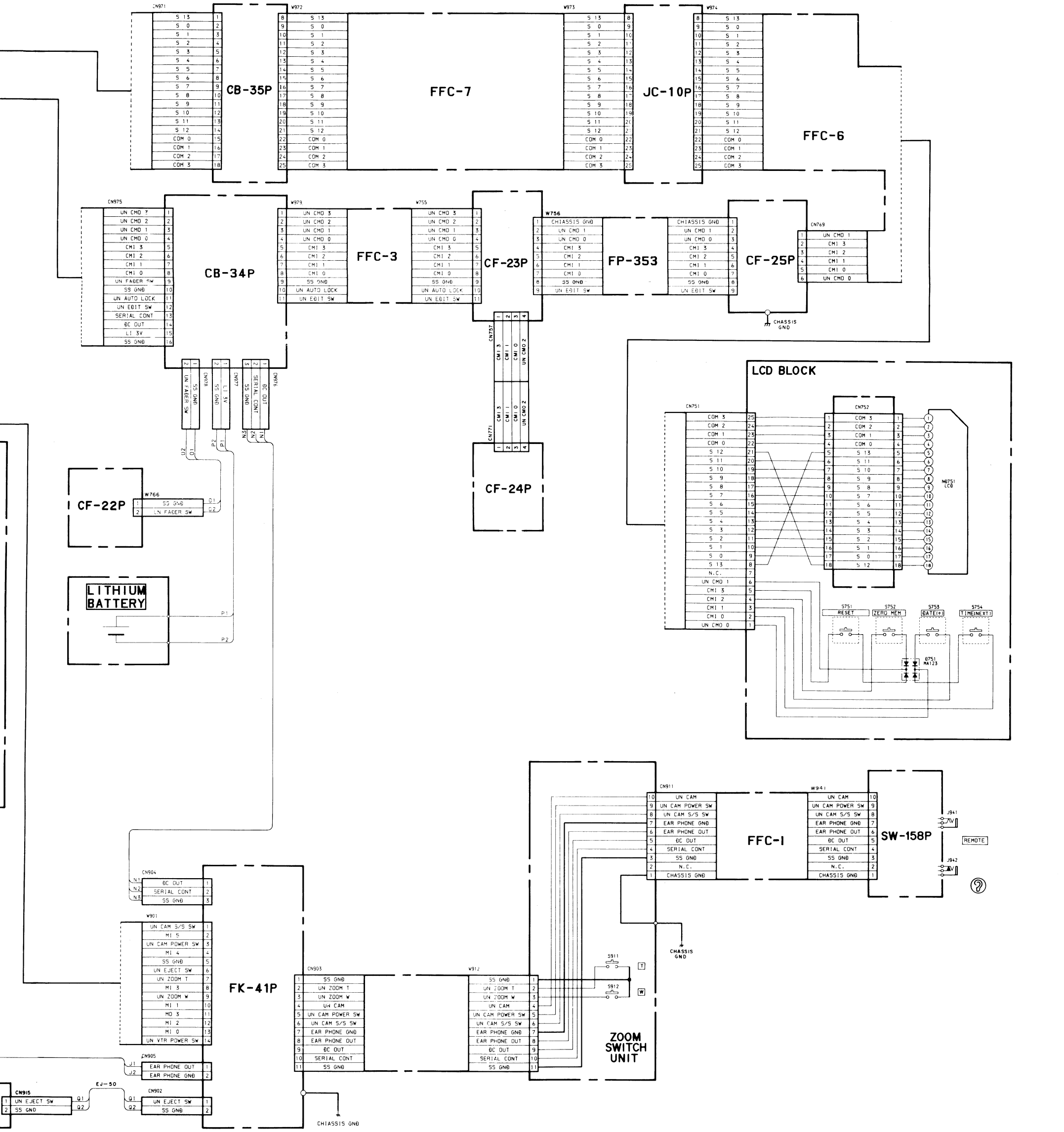

FRAME	FRAME

4-2. PRINTED WIRING BOARDS AND SCHEMATIC DIAGRAMS

THIS NOTE IS COMMON FOR PRINTED WIRING BOARDS AND SCHEMATIC DIAGRAMS.
(In addition to this , the necessary note is printed in each block.)

- **For printed wiring boards.**
- ○— : indicated a lead wire mounted on the component side.
- —— : indicated a lead wire mounted on the conductor side.
- ■ : Parts mounted on the conductor side.
- ▒ : Pattern from the side which enables seeing. } The inner two layers' patterns are not indicated.
- ▒ : Pattern of the rear side.
- Circled numbers refer to waveforms.
- (B) or (F), etc. of capacitors indicate the temperature characteristics.
- ● : Through hole

Caution:	
Pattern face side: (Conductor Side)	Parts on the pattern face side seen from the pattern face are indicated.
Parts face side: (Component side)	Parts on the parts face side seen from the parts face are indicated.

- **For schematic diagrams.**
- Caution when replacing chip parts.
  New parts must be attached after removal of chip.
  Be careful not to heat the minuts side of tantalum capacitor, because it is damaged by the heat.
- All resistors are in ohms, 1/4W unless otherwise noted.
  Chip resistor are 1/16W unless otherwise noted.
  kΩ : 1000Ω , MΩ : 1000kΩ .
- All capacitors are in μF unless otherwise noted. pF: μμF.
  50V or less are not indicated except for electrolytics and tantalums.
- All variable and adjustable resistors have characteristic curve B, unless otherwise noted.
- ▭ : nonflammable resistor.
- ▭ : fusible resistor.
- ▭ : panel designation.
- △ : internal component.
- ▭ : adjustment for repeair.
- ——— : B+ Line.
- - - - : B– Line .
- ▨ : IN/OUT direction of (+, –) B LINE.
- Circled numbers refer to waveforms.

Note:	**Note:**
The components identified by mark ⚠ or dotted line with mark ⚠ are critical for safty. Replace only with part number specified.	Les composants identifiés par une marque ⚠ sont critiques pour la sécurité. Ne les remplacer que par une piéce portant le numéro spécifié.

When indicating parts by reference number, please include the board name.

- **Measuring conditions voltage value and waveform.**

(CAMERA, DIGITAL TITLE block)

- The object is color bar chart of pattern box.
- Voltages are dc between ground and measurement points. Readings are taken with a digital multimeter (DC 10MΩ).
- Voltage variations may be noted due to normal production tolerances.

1. Connection

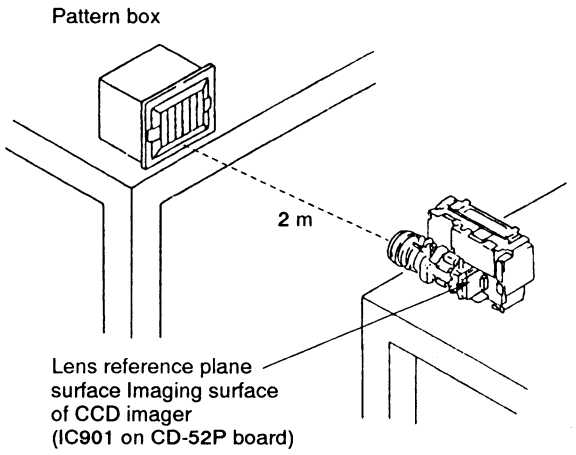

2. Adjust the distance so that the output waveform of Fig. a and the Fig. b can be obtain.

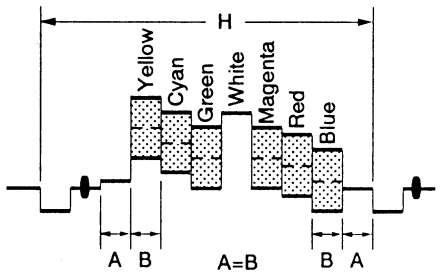

Fig. a (Video output terminal output waveform)

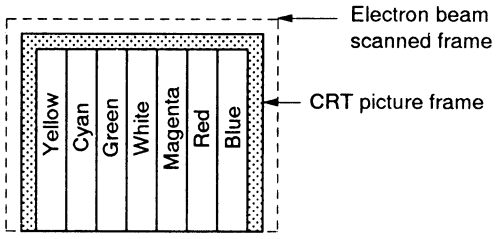

Fig. b (Picture on monitor TV)

(VIDEO, SERVO/SYSTEM CONTROL, MODE CONTROL, AUDIO, VIEW FINDER block)

- Voltages are dc between ground and measurement points.
- Readings are taken with a color-bar signal input.
- Readings are taken with a digital multimeter (DC10MΩ).
- Voltage variations may be noted due to normal production tolerances.

VC-81P (CAMERA) SCHEMATIC DIAGRAM

— Ref. No. VC-81P BOARD: 2000 series —

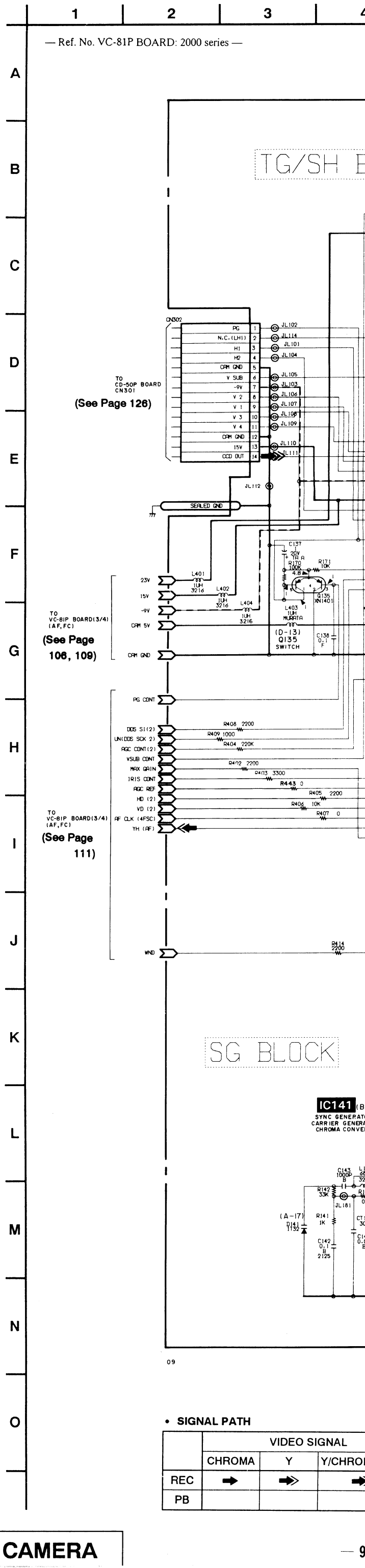

- **SIGNAL PATH**

	VIDEO SIGNAL		
	CHROMA	Y	Y/CHRO
REC	➡	➡≫	➡
PB			

TG/SH BLOCK

SG BLOCK

MX BLOCK

(D-19)(D-18)(D-20)(C-20)
Q131,132,133,134
V SUB REQ

(D-18)

(D-11)

(D-14)

(D-14)

(B-19)
Q105
AGC REF

(C-20)
Q102
IRIS DET

(B-20)
Q101
AGC DET

(A-20)
Q106
AGC SW

(D-10)
Q107
AGC CONT
BUFFER

(B-20)
Q181
LPF

(B-20)
Q182
CLAMP

(D-13)
Q135
SWITCH

(D-11)
Q113
SWITCH

(C-10)
Q112
AGC DET

(C-11)
Q111 IRIS DET

(A-16)
Q142
BUFFER

Q141
WINDOW PULSE
GENERATOR

IC141 (B-17)
SYNC GENERATOR
CARRIER GENERATOR
CHROMA CONVERT

IC183
1H DELAY

DT-77LX
BOARD

FL181 Y LPF

SEALED GND

AGC CONT

S2 OUT

S1 OUT

Y OUT

HD

VD

YH(RF)

CLK

FLD

WINDOW

CLK

(C-9)

NAL PATH

	VIDEO SIGNAL			AUDIO SIGNAL
	CHROMA	Y	Y/CHROMA/DATA	
	➡	➡	➡	

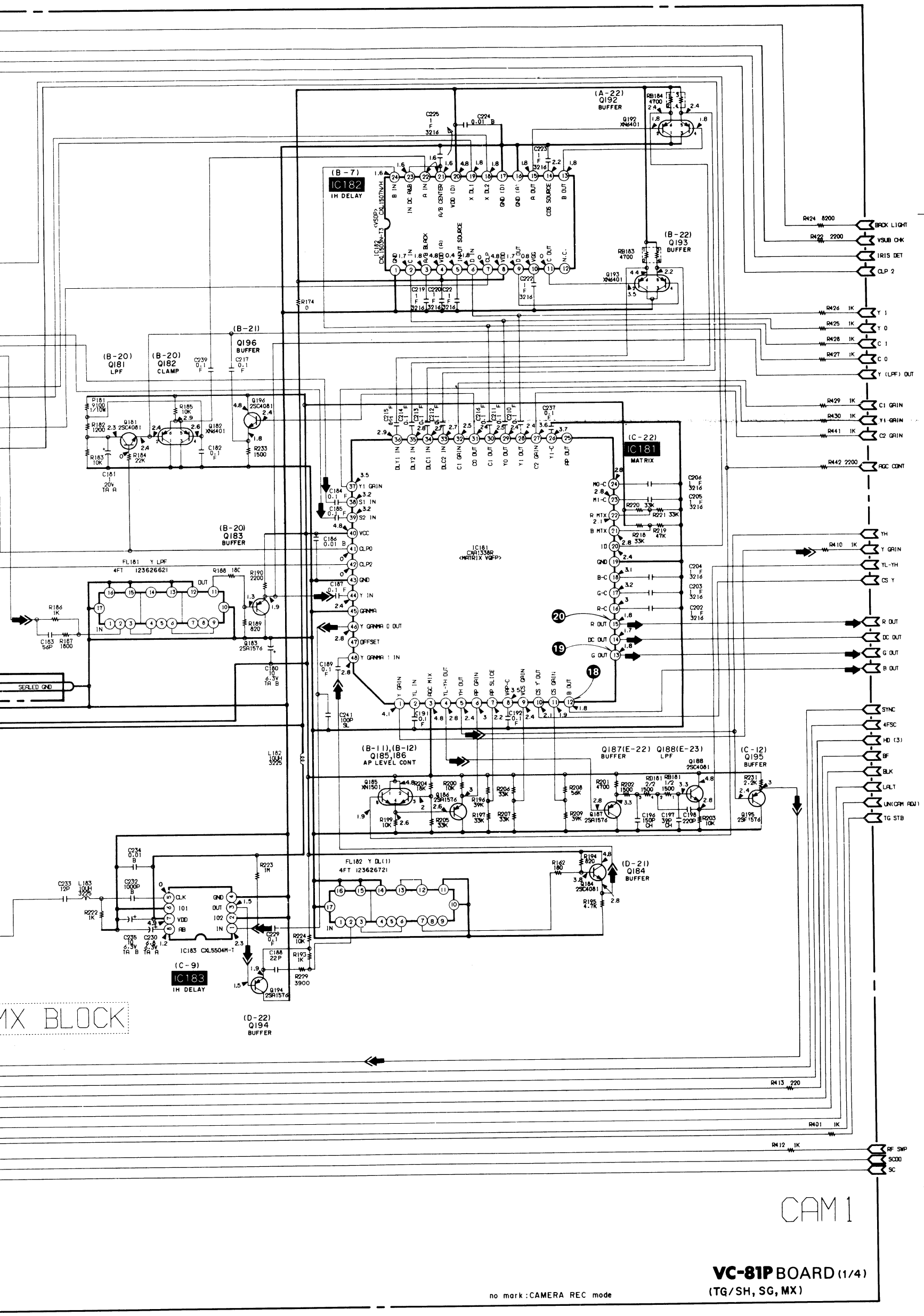

VC-81P BOARD

D101	D-14	Q564	J-22
D102	D-14	Q565	H-23
D131	D-11	Q566	I-23
D132	D-18	Q567	I-24
D141	A-17	Q568	I-25
D142	B-16	Q569	H-25
D301	B-29	Q570	I-25
D361	E-5	Q571	I-9
D362	E-25	Q572	J-8
D561	I-24	Q573	J-21
D562	I-5	Q610	G-11
D563	J-23	Q612	H-11
D611	G-18	Q613	J-17
		Q614	J-16
IC141	B-17	Q619	G-14
IC181	C-22	Q620	F-13
IC182	B-7	Q621	F-17
IC183	C-9		
IC251	D-26		
IC252	E-3		
IC253	C-5		
IC301	C-28		
IC302	F-3		
IC361	G-24		
IC362	F-25		
IC363	F-22		
IC364	H-22		
IC501	G-27		
IC502	G-28		
IC503	I-28		
IC561	H-7		
IC610	G-10		
IC611	F-20		
IC612	I-17		
IC613	H-19		
IC615	F-16		
IC616	G-17		
Q101	B-20		
Q102	C-20		
Q106	A-20		
Q107	D-10		
Q111	C-11		
Q112	C-10		
Q113	D-11		
Q131	D-19		
Q132	D-18		
Q135	D-13		
Q141	D-17		
Q142	A-16		
Q181	B-20		
Q182	B-20		
Q183	B-20		
Q184	D-21		
Q185	B-11		
Q186	B-12		
Q187	E-22		
Q188	E-23		
Q189	C-24		
Q190	C-25		
Q191	B-25		
Q192	A-22		
Q193	B-22		
Q194	D-22		
Q195	C-12		
Q196	B-21		
Q255	E-28		
Q256	E-5		
Q257	D-27		
Q302	D-29		
Q303	E-1		
Q307	E-2		
Q310	F-29		
Q311	F-2		
Q312	F-29		
Q313	F-2		
Q314	F-27		
Q315	F-2		
Q361	E-5		
Q362	F-6		
Q363	G-10		
Q364	F-9		
Q365	G-20		
Q367	H-21		
Q368	F-6		
Q501	G-1		
Q502	H-1		
Q503	G-4		
Q504	J-1		
Q505	I-26		
Q508	H-2		
Q509	J-29		
Q561	I-10		
Q562	J-22		
Q563	H-21		

no mark : CAMERA REC mode

VC-81P BOARD (1/4)
(TG/SH, SG, MX)

CAMERA CAMERA

VC-81P BOARD (1/4)

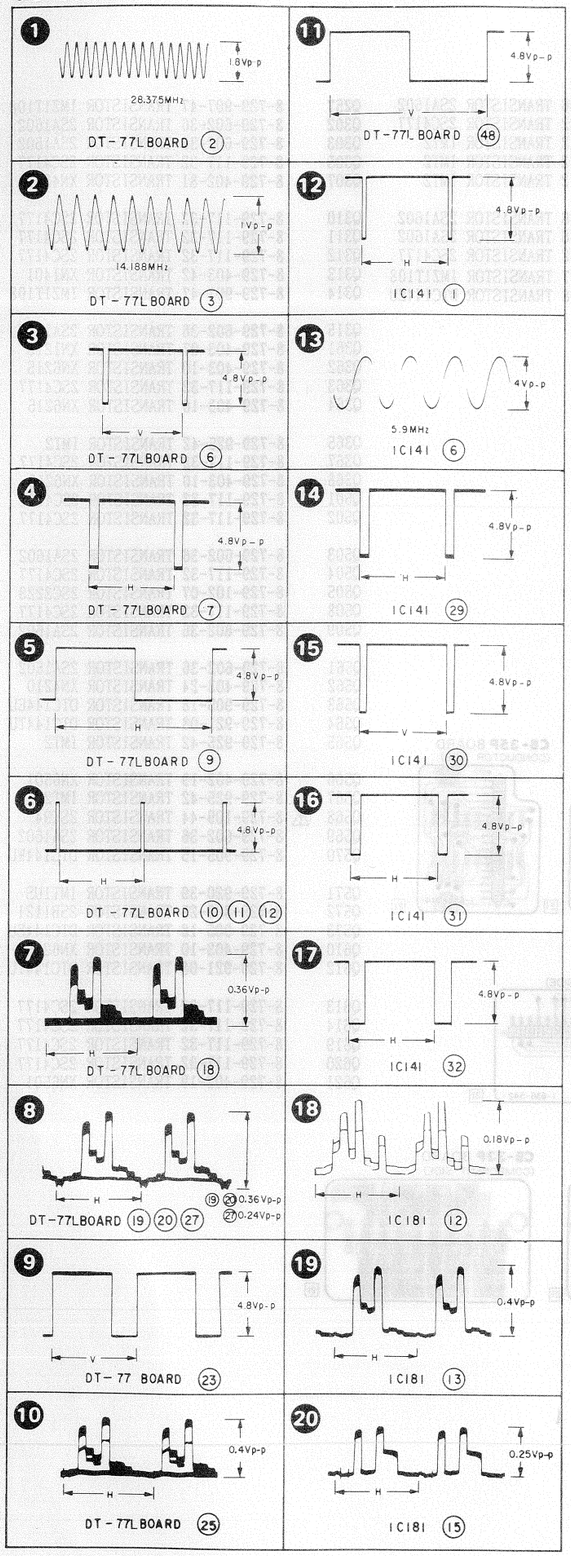

VC-81P (CAMERA), CB-33P (LINK), CB-35P (LINK), JC-10P (LINK) PRINTED WIRING BOARDS

— Ref. No. VC-81P BOARD: 1000, CB-33P BOARD: 1000, CB-35P BOARD: 6000, JC-10P BOARD: 7000 series —

- **For printed wiring boards.**
- VC-81P, CB-33P boards are the printed wiring board which has four layers structure but inner two layers' patterns are omitted.

VC-81 (P) BOARD, COMPLETE
****

< DIODE >

D101	8-719-404-46 DIODE MA110	D562	⚠ 8-719-420-51 DIODE MA729	IC141	8-
D102	8-719-404-46 DIODE MA110	D563	8-719-404-46 DIODE MA110	IC181	8-
D131	8-719-404-32 DIODE MA141WA	D611	8-719-404-32 DIODE MA141WA	IC182	8-
D132	8-719-404-46 DIODE MA110			IC183	8-
D141	8-719-949-46 DIODE 1T32			IC251	8-
D142	8-719-949-46 DIODE 1T32			IC252	8-
D301	8-719-404-46 DIODE MA110			IC253	8-
D361	8-719-404-32 DIODE MA141WA			IC301	8-
D362	8-719-404-46 DIODE MA110			IC302	8-
D561	8-719-404-49 DIODE MA111			IC361	8-

VC-81P BOARD (COMPONENT SIDE)

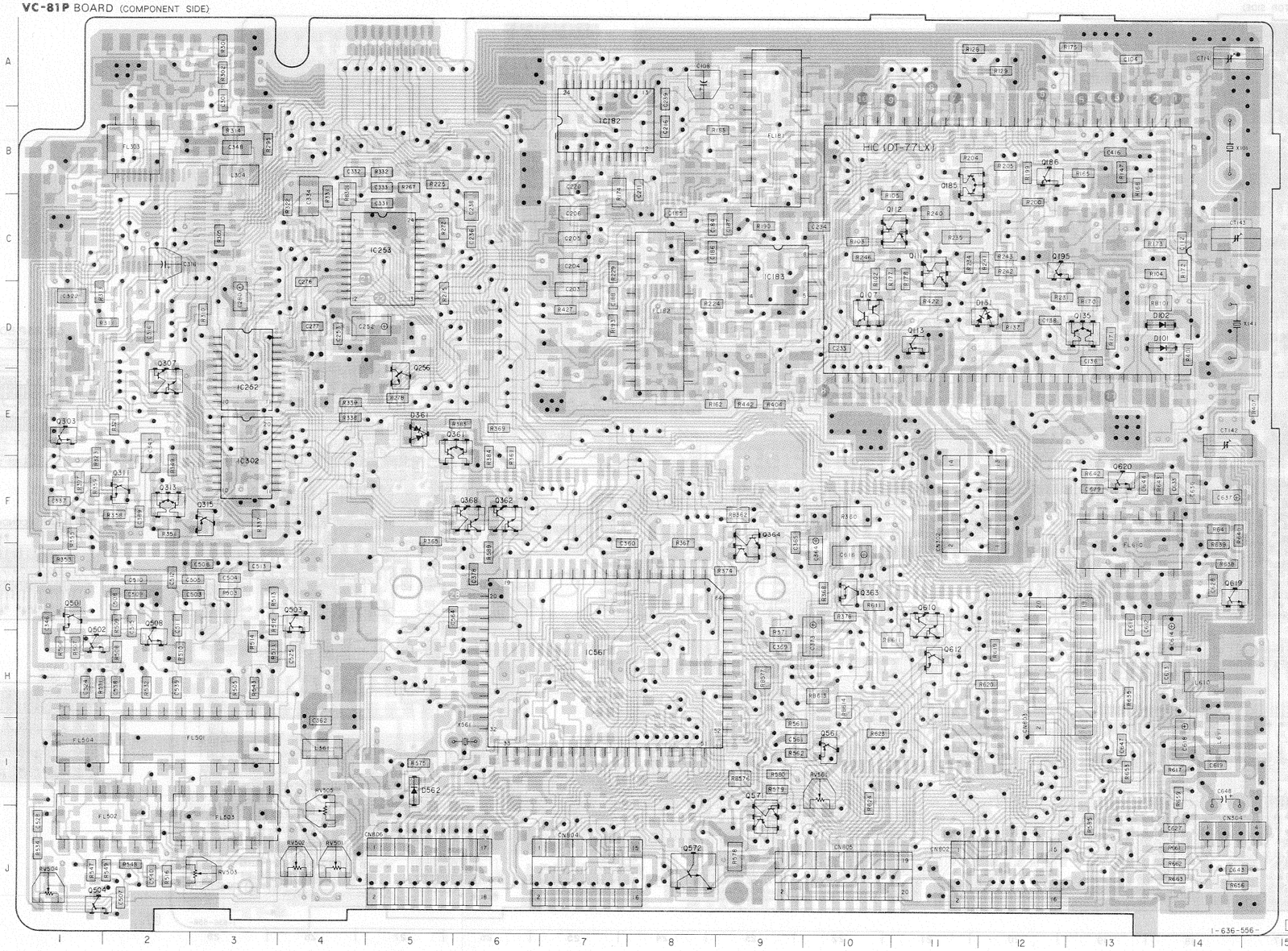

VC-81P BOARD (CONDUCTOR SIDE)

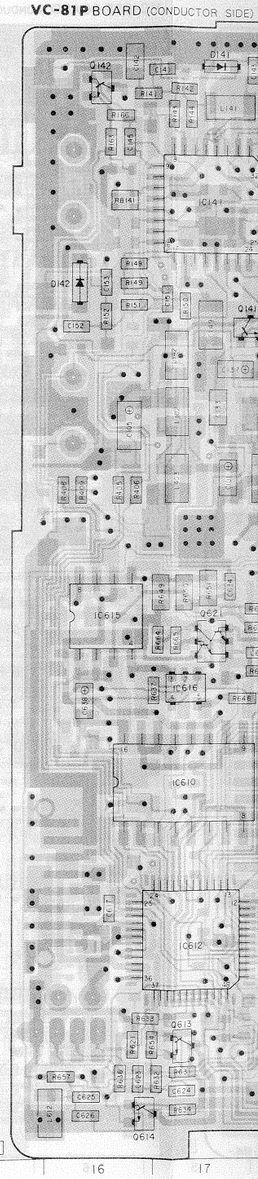

< IC >

-51 DIODE MA729	IC141	8-752-335-85	IC CXD2109Q	IC362	8-759-937-56	IC S-8054ALB-LM-S	IC613	8-759-038-59	IC MC68HC05C4-SC403112
-46 DIODE MA110	IC181	8-752-034-17	IC CXA1338R	IC363	8-759-008-67	IC MC14066BF	IC615	8-759-100-94	IC uPC358G2
-32 DIODE MA141WA	IC182	8-752-330-15	IC CXL1503N	IC364	8-759-150-05	IC uPC324G2	IC616	8-759-234-77	IC TC4S66F
	IC183	8-752-332-69	IC CXL5504M	IC501	8-759-144-23	IC uPC1037GR			
	IC251	8-752-034-21	IC CXA1339R	IC502	8-759-144-23	IC uPC1037GR			
	IC252	8-759-946-00	IC MB88341PFV	IC503	8-752-031-01	IC CXA1047M			
	IC253	8-752-039-49	IC CXA1393AN	IC561	8-759-154-07	IC uPD7503GF-J59-3B8			
	IC301	8-752-033-34	IC CXA1072R	IC610	8-752-334-49	IC CXD1172AM			
	IC302	8-759-946-00	IC MB88341PFV	IC611	8-759-502-04	IC MB88346PFV			
	IC361	8-759-037-60	IC MC68HC05N4-SC406667	IC612	8-752-326-18	IC CXD1204R			

< TRANSISTOR >

Q101	8-729-907-47	TRANSISTOR IMZ1T108	Q141	8-729-117-32	TRANSISTOR 2SC4177	Q189	8-729-602-36	TRANSISTOR 2SA1602
Q102	8-729-907-47	TRANSISTOR IMZ1T108	Q142	8-729-117-32	TRANSISTOR 2SC4177	Q190	8-729-117-32	TRANSISTOR 2SC4177
Q106	8-729-602-36	TRANSISTOR 2SA1602	Q181	8-729-117-32	TRANSISTOR 2SC4177	Q191	8-729-925-42	TRANSISTOR IMT2
Q107	8-729-907-47	TRANSISTOR IMZ1T108	Q182	8-729-925-42	TRANSISTOR IMT2	Q192	8-729-925-42	TRANSISTOR IMT2
Q111	8-729-907-47	TRANSISTOR IMZ1T108	Q183	8-729-602-36	TRANSISTOR 2SA1602	Q193	8-729-925-42	TRANSISTOR IMT2
Q112	8-729-907-47	TRANSISTOR IMZ1T108	Q184	8-729-117-32	TRANSISTOR 2SC4177	Q194	8-729-602-36	TRANSISTOR 2SA1602
Q113	8-729-921-58	TRANSISTOR DTA144TU	Q185	8-729-421-23	TRANSISTOR XN1216	Q195	8-729-602-36	TRANSISTOR 2SA1602
Q131	8-729-421-23	TRANSISTOR XN1216	Q186	8-729-602-36	TRANSISTOR 2SA1602	Q196	8-729-117-32	TRANSISTOR 2SC4177
Q132	8-729-117-32	TRANSISTOR 2SC4177	Q187	8-729-602-36	TRANSISTOR 2SA1602	Q255	8-729-907-47	TRANSISTOR IMZ1T108
Q135	8-729-403-42	TRANSISTOR XN1401	Q188	8-729-117-32	TRANSISTOR 2SC4177	Q256	8-729-905-18	TRANSISTOR DTC144EU
						Q257	8-729-907-47	TRANSISTOR IMZ1T108
						Q302	8-729-602-36	TRANSISTOR 2SA1602
						Q303	8-729-602-36	TRANSISTOR 2SA1602
						Q305	8-729-117-32	TRANSISTOR 2SC4177
						Q307	8-729-402-81	TRANSISTOR XN4501
						Q310	8-729-117-32	TRANSISTOR 2SC4177
						Q311	8-729-117-32	TRANSISTOR 2SC4177
						Q312	8-729-117-32	TRANSISTOR 2SC4177
						Q313	8-729-403-42	TRANSISTOR XN1401
						Q314	8-729-907-47	TRANSISTOR IMZ1T108
						Q315	8-729-602-36	TRANSISTOR 2SA1602
						Q361	8-729-403-07	TRANSISTOR XN1213
						Q362	8-729-403-10	TRANSISTOR XN6215
						Q363	8-729-117-32	TRANSISTOR 2SC4177
						Q364	8-729-403-10	TRANSISTOR XN6215
						Q365	8-729-925-42	TRANSISTOR IMT2
						Q367	8-729-117-32	TRANSISTOR 2SC4177
						Q368	8-729-403-10	TRANSISTOR XN6215
						Q501	8-729-117-32	TRANSISTOR 2SC4177
						Q502	8-729-117-32	TRANSISTOR 2SC4177
						Q503	8-729-602-36	TRANSISTOR 2SA1602
						Q504	8-729-117-32	TRANSISTOR 2SC4177
						Q505	8-729-102-07	TRANSISTOR 2SC2223
						Q508	8-729-117-32	TRANSISTOR 2SC4177
						Q509	8-729-602-36	TRANSISTOR 2SA1602
						Q561	8-729-602-36	TRANSISTOR 2SA1602
						Q562	8-729-403-24	TRANSISTOR XN4210
						Q563	8-729-905-18	TRANSISTOR DTC144EU
						Q564	8-729-921-08	TRANSISTOR DTC144TU
						Q565	8-729-925-42	TRANSISTOR IMT2
						Q566	8-729-402-19	TRANSISTOR XN6501
						Q567	8-729-925-42	TRANSISTOR IMT2
						Q568	⚠ 8-729-109-44	TRANSISTOR 2SK94
						Q569	8-729-602-36	TRANSISTOR 2SA1602
						Q570	8-729-905-15	TRANSISTOR DTC144WU
						Q571	8-729-920-39	TRANSISTOR IMT1US
						Q572	8-729-805-25	TRANSISTOR 2SB1121
						Q573	8-729-905-18	TRANSISTOR DTC144EU
						Q610	8-729-403-10	TRANSISTOR XN6215
						Q612	8-729-921-08	TRANSISTOR DTC144TU
						Q613	8-729-117-32	TRANSISTOR 2SC4177
						Q614	8-729-117-32	TRANSISTOR 2SC4177
						Q619	8-729-117-32	TRANSISTOR 2SC4177
						Q620	8-729-117-32	TRANSISTOR 2SC4177
						Q621	8-729-402-19	TRANSISTOR XN6501

VC-81P BOARD (CONDUCTOR SIDE)

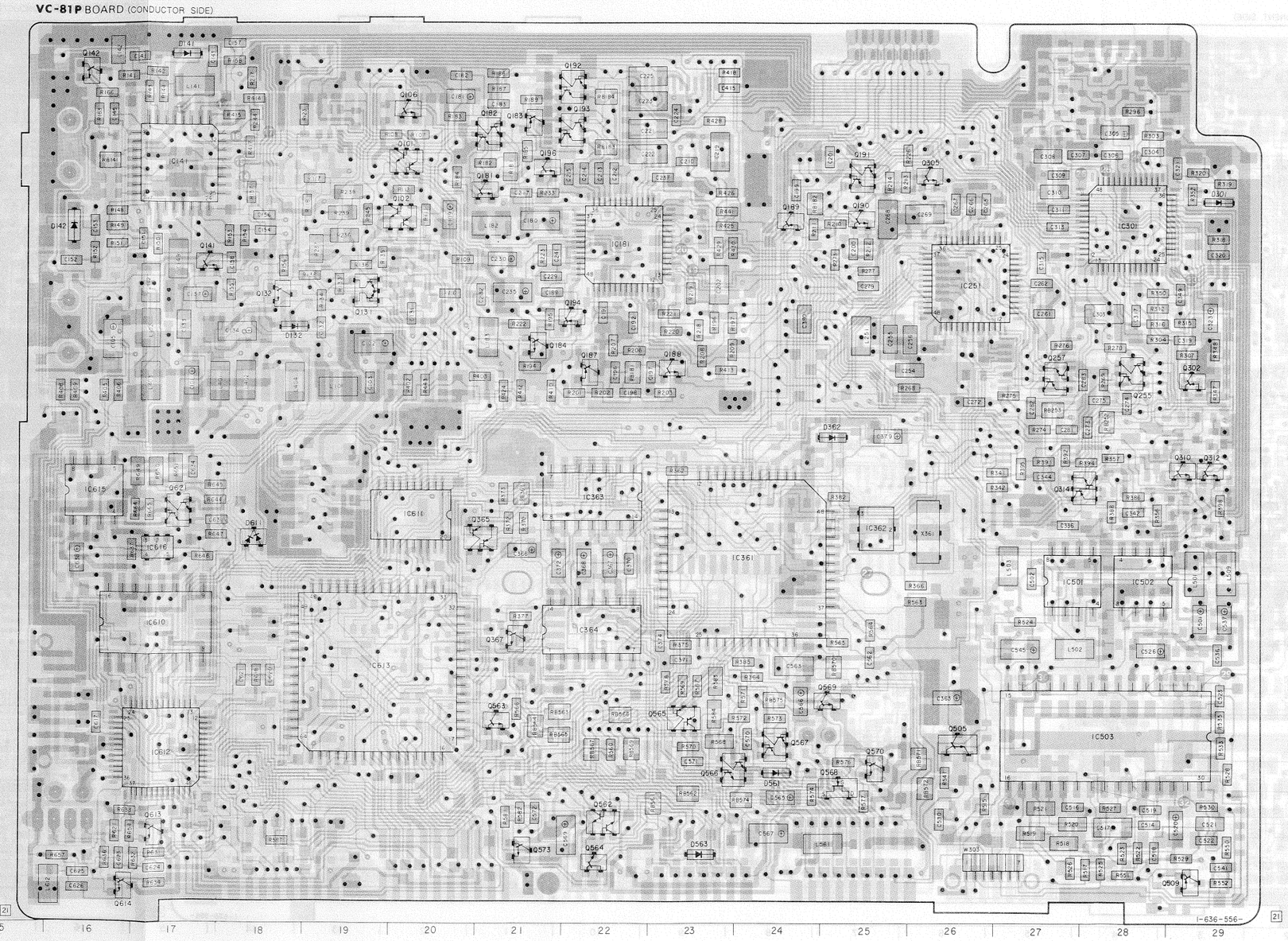

CB-35P BOARD (COMPONENT SIDE)

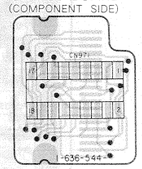

CB-35P BOARD (CONDUCTOR SIDE)

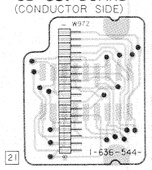

JC-10P BOARD (CONDUCTOR SIDE)

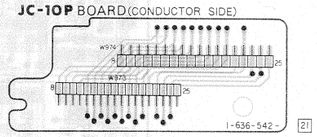

CB-33P BOARD (CONDUCTOR SIDE)

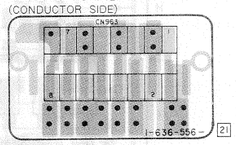

CB-33P BOARD (COMPONENT SIDE)

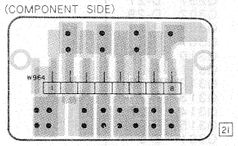

VC-81P (CAMERA), CB-33P (LINK), CB-35P (LINK), JC-10P (LINK) PRINTED WIRING BOARDS

— Ref. No. VC-81P BOARD: 1000, CB-33P BOARD: 1000, CB-35P BOARD: 6000, JC-10P BOARD: 7000 series —

- **For printed wiring boards.**
- VC-81P, CB-33P boards are the printed wiring board which has four layers structure but inner two layers' patterns are omitted.

VC-81P BOARD (2/4)

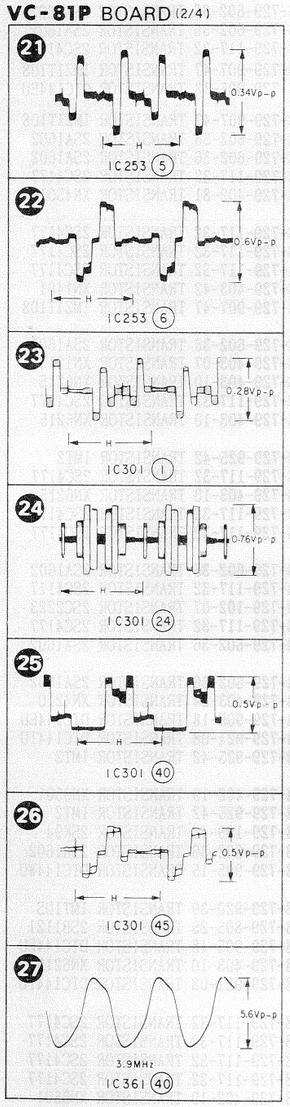

VC-81P BOARD

D101	D-14	Q564	J-22
D102	D-14	Q565	H-23
D131	D-11	Q566	I-23
D132	D-18	Q567	I-24
D141	A-17	Q568	I-25
D142	B-16	Q569	H-25
D301	B-29	Q570	I-25
D361	E-5	Q571	I-9
D362	E-25	Q572	J-8
D561	I-24	Q573	J-21
D562	I-5	Q610	G-11
D563	J-23	Q612	H-11
D611	G-18	Q613	J-17
		Q614	J-16
IC141	B-17	Q619	G-14
IC181	C-22	Q620	F-13
IC182	B-7	Q621	F-17
IC183	C-9		
IC251	D-26		
IC252	E-3		
IC253	C-5		
IC301	C-28		
IC302	F-3		
IC361	G-24		
IC362	F-25		
IC363	F-22		
IC364	H-22		
IC501	G-27		
IC502	G-28		
IC503	I-28		
IC561	H-7		
IC610	G-10		
IC611	F-20		
IC612	I-17		
IC613	H-19		
IC615	F-16		
IC616	G-17		
Q101	B-20		
Q102	C-20		
Q106	A-20		
Q107	D-10		
Q111	C-11		
Q112	C-10		
Q113	D-11		
Q131	D-19		
Q132	D-18		
Q135	D-13		
Q141	D-17		
Q142	A-16		
Q181	B-20		
Q182	B-20		
Q183	B-20		
Q184	D-21		
Q185	B-11		
Q186	B-12		
Q187	E-22		
Q188	E-23		
Q189	C-24		
Q190	C-25		
Q191	B-25		
Q192	A-22		
Q193	B-22		
Q194	D-22		
Q195	C-12		
Q196	B-21		
Q255	E-28		
Q256	E-5		
Q257	D-27		
Q302	D-29		
Q303	E-1		
Q307	E-2		
Q310	F-29		
Q311	F-2		
Q312	F-29		
Q313	F-2		
Q314	F-27		
Q315	F-2		
Q361	E-5		
Q362	F-6		
Q363	G-10		
Q364	F-9		
Q365	G-20		
Q367	H-21		
Q368	F-6		
Q501	G-1		
Q502	H-1		
Q503	G-4		
Q504	J-1		
Q505	I-26		
Q508	H-2		
Q509	J-29		
Q561	I-10		
Q562	J-22		
Q563	H-21		

VC-81 (P) BOARD, COMPLETE
****

< DIODE >

D101	8-719-404-46 DIODE MA110	D562	⚠ 8-719-420-51 DIODE MA729		
D102	8-719-404-46 DIODE MA110	D563	8-719-404-46 DIODE MA110		
D131	8-719-404-32 DIODE MA141WA	D611	8-719-404-32 DIODE MA141WA		
D132	8-719-404-46 DIODE MA110				
D141	8-719-949-46 DIODE 1T32				
D142	8-719-949-46 DIODE 1T32				
D301	8-719-404-46 DIODE MA110				
D361	8-719-404-32 DIODE MA141WA				
D362	8-719-404-46 DIODE MA110				
D561	8-719-404-49 DIODE MA111				

< IC >

IC141	8-752-335-85 IC CXD2109Q	IC362	8-7
IC181	8-752-034-17 IC CXA1338R	IC363	8-7
IC182	8-752-330-15 IC CXL1503N	IC364	8-7
IC183	8-752-332-69 IC CXL5504M	IC501	8-7
IC251	8-752-034-21 IC CXA1339R	IC502	8-7
IC252	8-759-946-00 IC MB88341PFV	IC503	8-7
IC253	8-752-039-49 IC CXA1393AN	IC561	8-7
IC301	8-752-033-34 IC CXA1072R	IC610	8-7
IC302	8-759-946-00 IC MB88341PFV	IC611	8-7
IC361	8-759-037-60 IC MC68HC05N4-SC406667	IC612	8-7

VC-81P BOARD (COMPONENT SIDE)

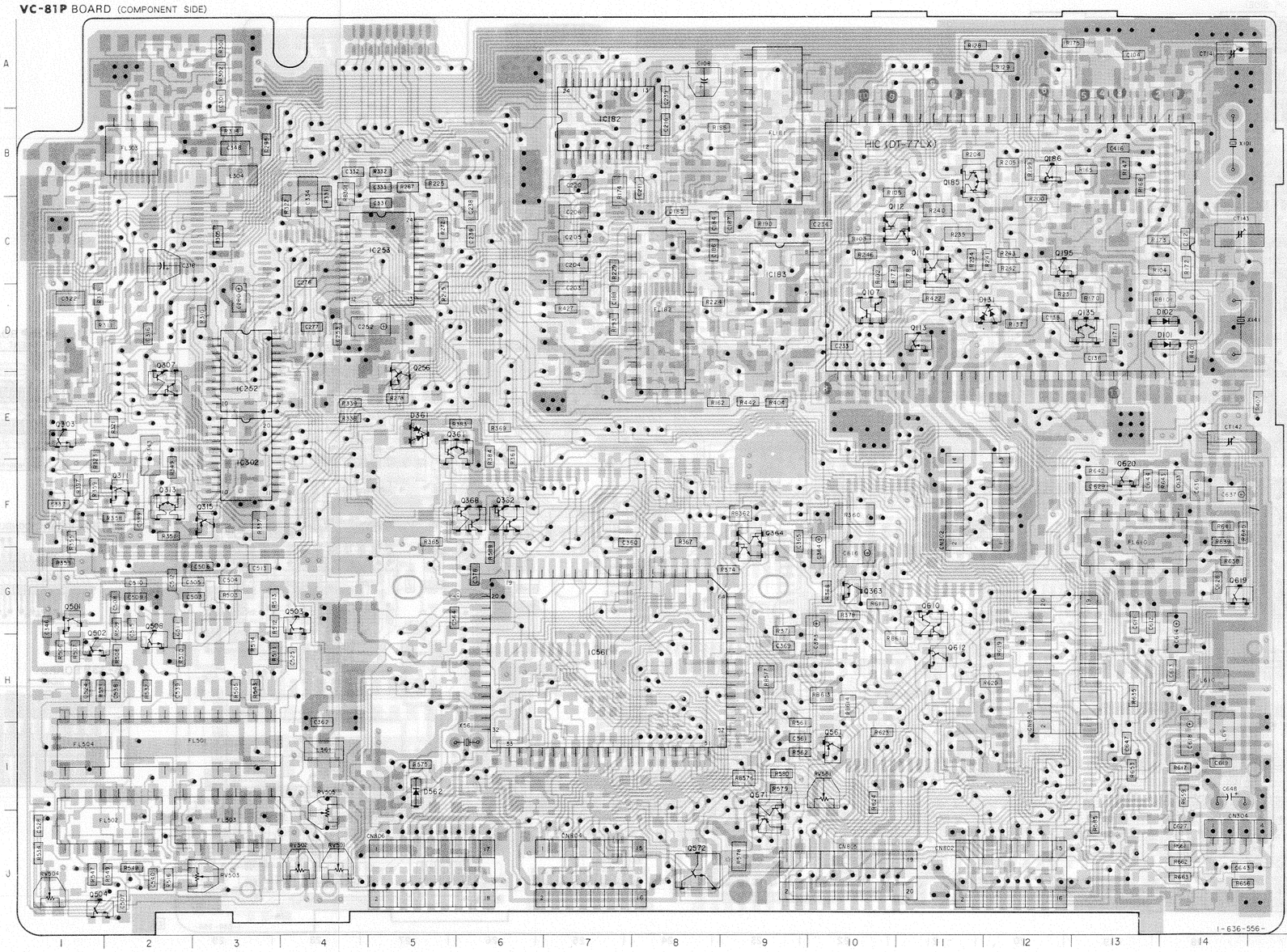

VC-81P BOARD (CONDUCT

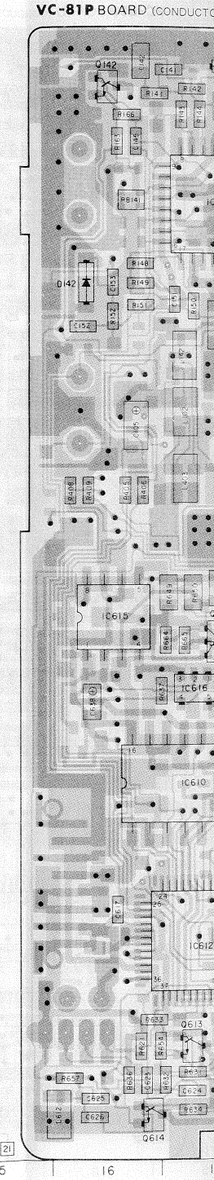

>

D2109Q	IC362	8-759-937-56	IC S-8054ALB-LM-S
A1338R	IC363	8-759-008-67	IC MC14066BF
L1503N	IC364	8-759-150-05	IC uPC324G2
L5504M	IC501	8-759-144-23	IC uPC1037GR
A1339R	IC502	8-759-144-23	IC uPC1037GR
88341PFV	IC503	8-752-031-01	IC CXA1047M
A1393AN	IC561	8-759-154-07	IC uPD7503GF-J59-3B8
A1072R	IC610	8-752-334-49	IC CXD1172AM
88341PFV	IC611	8-759-502-04	IC MB88346PFV
68HC05N4-SC406667	IC612	8-752-326-18	IC CXD1204R

IC613	8-759-038-59	IC MC68HC05C4-SC403112
IC615	8-759-100-94	IC uPC358G2
IC616	8-759-234-77	IC TC4S66F

< TRANSISTOR >

Q101	8-729-907-47	TRANSISTOR IMZ1T108
Q102	8-729-907-47	TRANSISTOR IMZ1T108
Q106	8-729-602-36	TRANSISTOR 2SA1602
Q107	8-729-907-47	TRANSISTOR IMZ1T108
Q111	8-729-907-47	TRANSISTOR IMZ1T108
Q112	8-729-907-47	TRANSISTOR IMZ1T108
Q113	8-729-921-58	TRANSISTOR DTA144TU
Q131	8-729-421-23	TRANSISTOR XN1216
Q132	8-729-117-32	TRANSISTOR 2SC4177
Q135	8-729-403-42	TRANSISTOR XN1401
Q141	8-729-117-32	TRANSISTOR 2SC4177
Q142	8-729-117-32	TRANSISTOR 2SC4177
Q181	8-729-117-32	TRANSISTOR 2SC4177
Q182	8-729-925-42	TRANSISTOR IMT2
Q183	8-729-602-36	TRANSISTOR 2SA1602
Q184	8-729-117-32	TRANSISTOR 2SC4177
Q185	8-729-421-23	TRANSISTOR XN1216
Q186	8-729-602-36	TRANSISTOR 2SA1602
Q187	8-729-602-36	TRANSISTOR 2SA1602
Q188	8-729-117-32	TRANSISTOR 2SC4177
Q189	8-729-602-36	TRANSISTOR 2SA1602
Q190	8-729-117-32	TRANSISTOR 2SC4177
Q191	8-729-925-42	TRANSISTOR IMT2
Q192	8-729-925-42	TRANSISTOR IMT2
Q193	8-729-925-42	TRANSISTOR IMT2
Q194	8-729-602-36	TRANSISTOR 2SA1602
Q195	8-729-602-36	TRANSISTOR 2SA1602
Q196	8-729-117-32	TRANSISTOR 2SC4177
Q255	8-729-907-47	TRANSISTOR IMZ1T108
Q256	8-729-905-18	TRANSISTOR DTC144EU
Q257	8-729-907-47	TRANSISTOR IMZ1T108
Q302	8-729-602-36	TRANSISTOR 2SA1602
Q303	8-729-602-36	TRANSISTOR 2SA1602
Q305	8-729-117-32	TRANSISTOR 2SC4177
Q307	8-729-402-81	TRANSISTOR XN4501
Q310	8-729-117-32	TRANSISTOR 2SC4177
Q311	8-729-117-32	TRANSISTOR 2SC4177
Q312	8-729-117-32	TRANSISTOR 2SC4177
Q313	8-729-403-42	TRANSISTOR XN1401
Q314	8-729-907-47	TRANSISTOR IMZ1T108
Q315	8-729-602-36	TRANSISTOR 2SA1602
Q361	8-729-403-07	TRANSISTOR XN1213
Q362	8-729-403-10	TRANSISTOR XN6215
Q363	8-729-117-32	TRANSISTOR 2SC4177
Q364	8-729-403-10	TRANSISTOR XN6215
Q365	8-729-925-42	TRANSISTOR IMT2
Q367	8-729-117-32	TRANSISTOR 2SC4177
Q368	8-729-403-10	TRANSISTOR XN6215
Q501	8-729-117-32	TRANSISTOR 2SC4177
Q502	8-729-117-32	TRANSISTOR 2SC4177
Q503	8-729-602-36	TRANSISTOR 2SA1602
Q504	8-729-117-32	TRANSISTOR 2SC4177
Q505	8-729-102-07	TRANSISTOR 2SC2223
Q508	8-729-117-32	TRANSISTOR 2SC4177
Q509	8-729-602-36	TRANSISTOR 2SA1602
Q561	8-729-602-36	TRANSISTOR 2SA1602
Q562	8-729-403-24	TRANSISTOR XN4210
Q563	8-729-905-18	TRANSISTOR DTC144EU
Q564	8-729-921-08	TRANSISTOR DTC144TU
Q565	8-729-925-42	TRANSISTOR IMT2
Q566	8-729-402-19	TRANSISTOR XN6501
Q567	8-729-925-42	TRANSISTOR IMT2
Q568	⚠ 8-729-109-44	TRANSISTOR 2SK94
Q569	8-729-602-36	TRANSISTOR 2SA1602
Q570	8-729-905-15	TRANSISTOR DTC144WU
Q571	8-729-920-39	TRANSISTOR IMT1US
Q572	8-729-805-25	TRANSISTOR 2SB1121
Q573	8-729-905-18	TRANSISTOR DTC144EU
Q610	8-729-403-10	TRANSISTOR XN6215
Q612	8-729-921-08	TRANSISTOR DTC144TU
Q613	8-729-117-32	TRANSISTOR 2SC4177
Q614	8-729-117-32	TRANSISTOR 2SC4177
Q619	8-729-117-32	TRANSISTOR 2SC4177
Q620	8-729-117-32	TRANSISTOR 2SC4177
Q621	8-729-402-19	TRANSISTOR XN6501

VC-81P BOARD (CONDUCTOR SIDE)

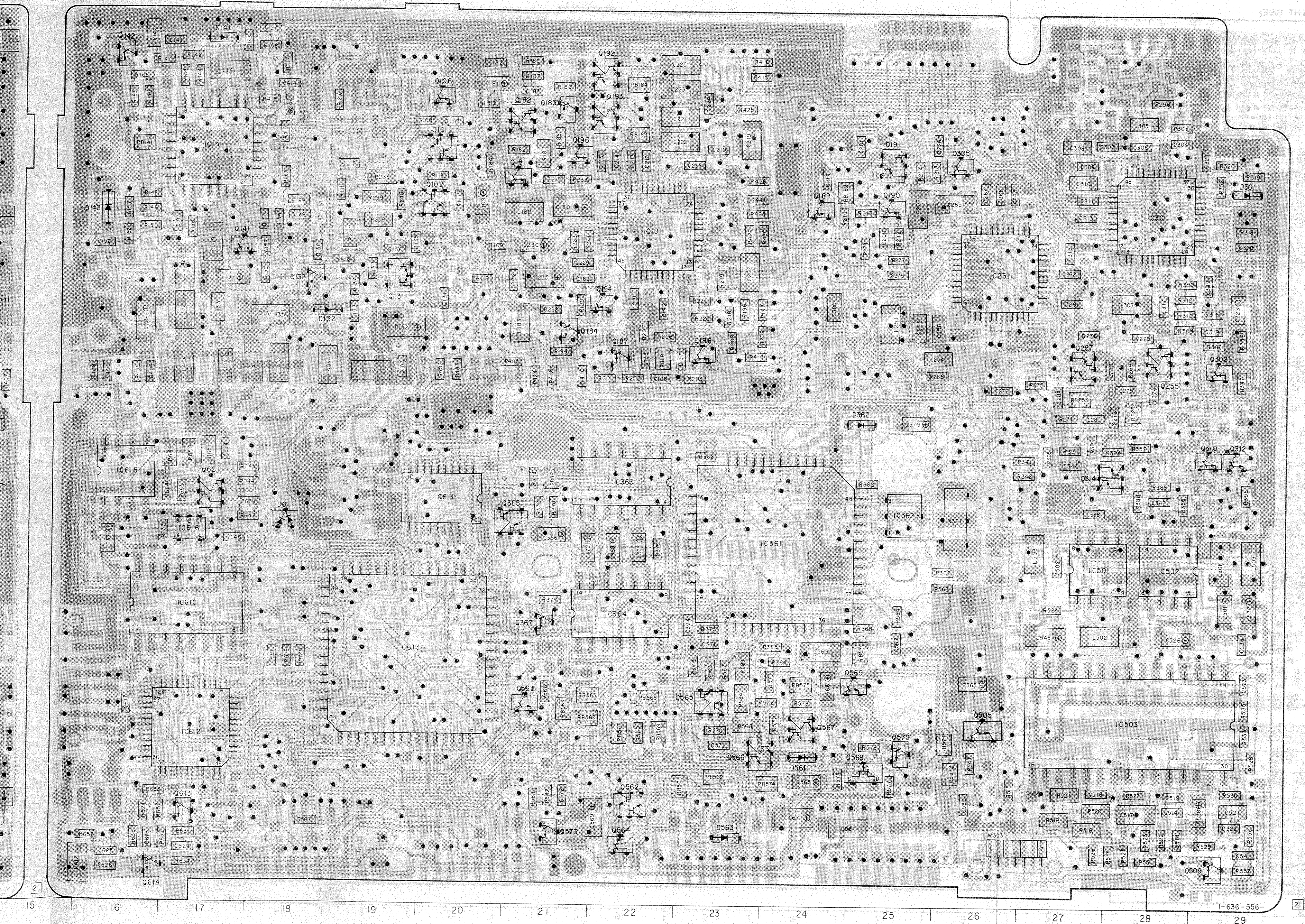

CB-35P BOARD (COMPONENT SIDE)

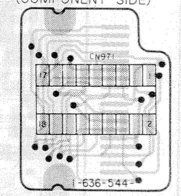

CB-35P BOARD (CONDUCTOR SIDE)

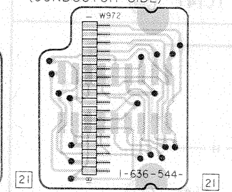

JC-10P BOARD (CONDUCTOR SIDE)

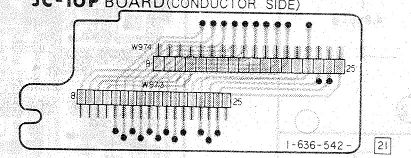

CB-33P BOARD (CONDUCTOR SIDE)

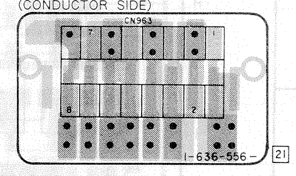

CB-33P BOARD (COMPONENT SIDE)

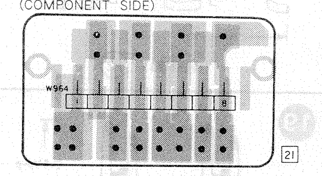

— Ref. No. VC-81P BOARD: 2000 series —

CP BLOCK

TO VC-81P BOARD(1/4) (TG/SH, SG, MX)

(See Page 94, 96)

TO VC-81P BOARD(3/4) (AF, FC)

(See Page 110, 111)

IC251 PROCESS (D-26)

IC252 EVR (E-3)

IC253 TITLE MIX, TITLE COMPARATOR (C-5)

IC361 EVR/AUTO WHITE BALANCE CPU (G-24)

IC362 RESET (F-25)

Q256 SWITCH (E-5)

(F-6)Q368,362 SWITCH (F-6)

(E-5) Q361 INVERTER

CHECK POINT ARRAY

CP9001
G OUT CHK
PG CONT
N.C.
Y 0
Y 1
C 0
C 1
CAM Y
YH (MIX OUT)
CAM C
IRIS CONT
N.C.
N.C.
Y (LPF) OUT
VSUB CHK
CAM ADJ
UNICAM ADJ
OFFSET CONT
N.C.
SHUTTER EN
CAM GND
IRIS DET

JL301 JL302 JL303 JL304 JL305 JL306 JL307 JL308 JL309 JL311

ED BLOCK

R296 0
R303 1K
R301 1K
C301 82P
R302 1200
R295 0
C236 0.1 F

Q189 2SA1576 BUFFER (C-24)
Q190 2SC4081 LPF (C-25)
Q191 XN6401 BLANKING (B-25)

L303 4FS 141569521

IC301 CXA1072R <ENCODER VQFP>
(E-1)

D310 MA110
R319 33K
R320 33K
R318 22K
C320 0.1 F
C321 0.1 F
C323 0.47 35V TA A
C322 3216
C349 0.01
R352 15K
JL310
R350 100K
R312 68K
R311 100K

IC252 (E-3) EVR
IC252 MB86341PFV <VSOP>

IC253 (C-5) TITLE MIX, TITLE COMPARATOR
IC253 CXA1393A

(E-28) Q255 TITLE (R-Y) MIX
(D-27) Q257 TITLE (B-Y) MIX

R272 10K R267 10K
R273 10K R277 12K
R278 5.8k

(E-2) Q307 SET UP, SYNC LEVEL
R347 17K R348 47K
L303 10UH 3216

IC302 MB86341PFV
(F-3) IC302 EVR

(E-1) Q303 BLK SWITCH
R322 8.2K R323 5600 R321 0
Q305 2SA1576

Q305 (B-26) LPF
RB301 1/2 1K RB301 2/2 1K
Q305 2SC4081
C331 82P C332 22P C333 12P R332 3300 C334 1
C337 0.01 B
R338 27K R339 6800 R337 10K 1/10W

R310 0
R305 0
C310 0.47 F 2125
C311 10P CH
C313 1000P B
C315 0.1 F
C316 0.1 F

IC301 (C-28) ENCODER

C-OUT FADER SIG EVF OUT VCC (A) VIDEO OUT GND (D) R-Y SIG CS ADC CLP2 CS-Y LALT CHR IN

SHP LEVEL DLD SHP CLP YH IN YH CLP YL-YH IN GND YL-YH CLP R-Y IN R-Y DET R-Y CLP C-CLP

B-Y IN B-Y CLP B-Y DET HUE CONT FSC OUT VCC FSC IN B LEVEL CONT SYNC BF BLK VVP PULSE

C260 0.47 35V TA A
C272 0.01 B
C279 0.1
C280 0.47 35V TA A

(F-10) Q363,364 (F-9) BLANKING
Q365 (G-20) BLANKING PULSE SEP

IC363 UPC4066BG
IC364 UPC324G2

C365 0.01 B
C364 4.7 6.3V TA A
C366 3.3 6.3V TA A
C367 3.3 6.3V TA A
C368 3.3 6.3V TA A
C370 0.01 B
C372 0.22 35V TA A
C374 0.01 B
C371 0.01 F
C373 10 2.5V TA B

R367 100K
RB362 100K
RB363 10K
R369 10K
R370 22K
R372 2200
R373 1500
R374 100K
R371 10K
R375 39K
R376 10K
R377 100K
R378 10K
R364 10K
R365 10K

Q364 XN6215
Q363 2SC4081
Q365 XN6401
Q367 2SC4081

IC363 (F-22)
(1) (2) (13) SWITCH
(3) (4) (5) SWITCH
(6) (8) (9) DIS CHARG
(10) (11) (12) SWITCH

IC364 (H-22)
(1) (2) (3) AW COMPALATOR
(5) (6) (7) CURRENT SORCE
(8) (9) (10) DC OUT BUFFER
(12) (13) (14) TRIANGLE WAVEFORMER

(H-21) Q367 CURRENT SORCE

AW ADJ
CAM 5V

EVR BLOCK

17 18 19 20 21 22 23 24 25 26 27

ED BLOCK

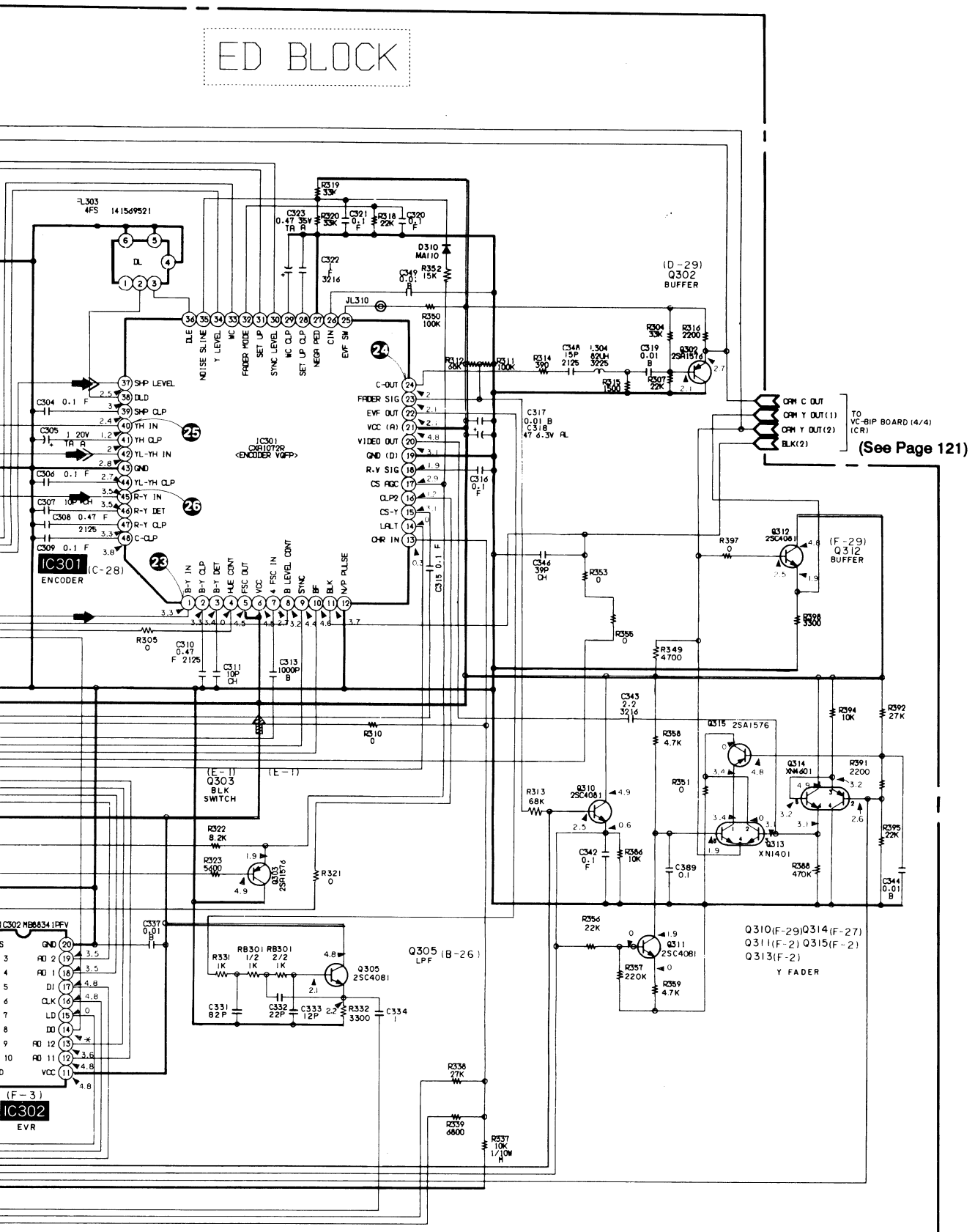

CAM 2

no mark : CAMERA REC mode
✳ : can not be measured

VC-81P BOARD (2/4)
(CP, ED, EVR)

- **SIGNAL PATH**

	VIDEO SIGNAL			AUDIO SIGNAL
	CHROMA	Y	Y/CHROMA/DATA	
REC	➡	➡		
PB				

— Ref. No. VC-81P BOARD: 1000, CB-33P BOARD: 1000, CB-35P BOARD: 6000, JC-10P BOARD: 7000 series —

CB-35P BOARD

W972 → CN971

S 13	8	1	S 13
S 0	9	2	S 0
S 1	10	3	S 1
S 2	11	4	S 2
S 3	12	5	S 3
S 4	13	6	S 4
S 5	14	7	S 5
S 6	15	8	S 6
S 7	16	9	S 7
S 8	17	10	S 8
S 9	18	11	S 9
S 10	19	12	S 10
S 11	20	13	S 11
S 12	21	14	S 12
COM 0	22	15	COM 0
COM 1	23	16	COM 1
COM 2	24	17	COM 2
COM 3	25	18	COM 3

JC-10P BOARD

W974 → W973

S 13	8	8	S 13
S 0	9	9	S 0
S 1	10	10	S 1
S 2	11	11	S 2
S 3	12	12	S 3
S 4	13	13	S 4
S 5	14	14	S 5
S 6	15	15	S 6
S 7	16	16	S 7
S 8	17	17	S 8
S 9	18	18	S 9
S 10	19	19	S 10
S 11	20	20	S 11
S 12	21	21	S 12
COM 0	22	22	COM 0
COM 1	23	23	COM 1
COM 2	24	24	COM 2
COM 3	25	25	COM 3

LCD BLOCK

CN751 → CN752 18P → N8751 LCD

COM 3	25	1	COM 3
COM 2	24	2	COM 2
COM 1	23	3	COM 1
COM 0	22	4	COM 0
S 12	21	5	S 13
S 11	20	6	S 11
S 10	19	7	S 10
S 9	18	8	S 9
S 8	17	9	S 8
S 7	16	10	S 7
S 6	15	11	S 6
S 5	14	12	S 5
S 4	13	13	S 4
S 3	12	14	S 3
S 2	11	15	S 2
S 1	10	16	S 1
S 0	9	17	S 0
S 13	8	18	S 12
N.C.	7		
UN CMO 1	6		
CMI 3	5		
CMI 2	4		
CMI 1	3		
CMI 0	2		
UN CMO 0	1		

TO CF-25P BOARD CN769 — (See Page 183)

S751 RESET, S752 ZERO MEM, S753 GATE(+), S754 TIME(NEXT), Q751 MA123

CB-33P BOARD

CN963 → W964

23V	1	1	23V
15V	2	2	15V
-9V	3	3	-9V
CAM 5V	4	4	CAM 5V
CAM GND	5	5	CAM GND
CAM GND	6	6	CAM GND
AF GND	7	7	AF GND
AF UNREG	8	8	AF UNREG

TO DD-31P BOARD CN103 — (See Page 193)

(See Page 181) TO CB-34P BOARD CN975

CN804: 1 UN(CMO 3I), 2 UN(CMO 2), 3 UN(CMO 1), 4 UN(CMO 0), 5 CMI 3, 6 CMI 2, 7 CMI 1, 8 CMI 0, 9 FADER SW, 10 SS GND, 11 AUTO LOCK, 12 UNIEDIT SW, 13 SERIAL CONT, 14 DC OUT, 15 LI 3V, 16 SS GND

CN806: 18 S 13, 17 S 0, 16 S 1, 15 S 2, 14 S 3, 13 S 4, 12 S 5, 11 S 6, 10 S 7, 9 S 8, 8 S 9, 7 S 10, 6 S 11, 5 S 12, 4 COM 0, 3 COM 1, 2 COM 2, 1 COM 3

CN803: 1 EVF W, 2 SS GND

(H-7) IC561 FEATURE CONTROL (DDS CPU)

IC561 UPD7503GF-J51

(I-10) Q561 SYSTEM CLOCK FREQUEUCY SW

Q561 2SA1576, C561 33P CH, RV561 100K, R561 220K, RB561 100K, R562 100K, RB562 100K, SYSTEM CLOCK, <SYS CLK>

Q562 XN4210 1/2 — (J-22) Q562 FADER SW

Q564 DTC144TU — Q564 AUTO LOCK SW (J-22)

Q562 2/2 XN4210 — Q562(J-22) LOW CONT SW, RB563 1K

(H-21) Q563 INVERTER — Q563 DTC144EU, R566 100K, R584 680K M 1/10W, R583 680K M 1/10W, C571 0.022 B

R587 68, R589 0, RB566 100K 1/2, RB564 100K, RB565 100K, R563 100K, R560 1K

R578 2.7 1/8W, SEMI POWER, Q572 2SB1121-ST, R579 3900, R580 1200, Q571 IMT1U5 1/2, C572 100P SL, Q571 IMT1U5 2/2, R581 6800, R582 2200, Q573 DTC144EU

(I-9),(J-8),(J-21) Q571-573 DC OUT SWITCH, CURRENT LIMITER

C648 220 10V SXJ

TO VC-81P BOARD (1/4),(2/4),(4/4) — (See Page 94,121) FP-186 FLEXIBLE

W801: 23V, 15V, -9V, CAM 5V, CAM GND, CAM GND, AF GND, AF UNREG

SS GND, SS 5V

TO VC-81P BOARD (2/4) (CD,ED,EVR) — (See Page 105)

CAMERA CAMERA

(See Page 133)

TO TI-32P BOARD CN801

(See Page 105)

TO VC-8IP BOARD(2/4) (CD,ED,EVR)

(See Page 156)

TG VS-69 BOARD W604(FP-184 FLEXIBLE)

(See Page 105)

TO VC-8IP BOARD (TG/SH,SG)

TO VC-8IP BOARD(2/4) (CD,ED,EVR)

CN803

EVF W, SS GND, SRAM CS, TITLE CS, UN(DDS SCK), DDS BD, DDS SI, CGSTBI, CG BUSY, VD, HD, SS 5V, DDS B+, TY MIX, TITLE R/D, TY BLK, UN(TC BLK), TB, TG, TR

CN802

SS 5V, EVER 5V, N.C.(FADER CONT), UN(TEST), UN(COSMO CS), UN(DDS SCK), DDS SG, DDS SI, UN(SYSTEM RESET), UN(COM ADJ), SERIAL CONT, EVF W, UN(ZOOM T), UN(ZOOM W), UN(EDIT SW), SS GND

TITLE TH, PG CONT, RF CLK (4FSC), VD (2), HD (2), AGC CONT(2), UN(DDS SCK 2), VSUB CONT, AGC REF, IRIS CONT, MRK GAIN, DDS SI(2), WND

UN(DDS SCK 2), MACRO, DDS SI(2), UN(EVR CS), PG CONT, IRIS CONT

IC561 UPD7503GF-J51

R564 330K, X561 32.768K, C564 10P CH, C562 20P CH, C563 F 3216, R565 47K, RB572 1K 2/2, RB571 1K 2/2, RB573 1K 1/2, RB571 1/2, RB570 47K 1/2, RB570 47K 2/2, R560 1K, RB569 1K, R589, RB566 100K 1/2, 100K RB564, 100K RB565

DDS SI, UN(DDS SCK), C569 10 6.3V TA B, R585 18K, HD (2), VD (2), UN(EVR CS), AF ZONE DISP, UN(SYS RESET), UN(ZOOM W), UN(ZOOM T), UN(MACRO), AF UNREG, CAM 5V, AF GND, CAM GND

(H-23),(I-23) Q565,566 LITHIUM BATTERY PRE END DETECT

(I-24) Q567 RESET

(I-25),(H-25) Q568,569 REG

Q568 2SK2090-TE, Q569 2SA1576, L561 1UH 3225, Q565 XN6401, Q566 XN6501, Q567 XN6401, Q570 DTC144WU, D561 MA111, D562 MA729, C571 0.022 B, C570 0.1, C565 2.2 6.3V TA A, C566 2.2 6.3V A, C567 10 6.3V TA B, R567 1M, R569 390K, R583 680K M 1/10W, R584 680K M 1/10W, R568 100K M 1/10W 1%, R570 1M, R571 100K, R572 100K, R573 330K, R574 100K, R575 2.2M, R576 33K, R577 68K, R574 100

(I-24) D561 MA111

(I-25) Q570 EVER 5V DET

IC610 (G-10) A/D CONVERTER

CXD1172AM, IC610

Q610(G-11) SWITCH

C611 0.01 F, C612 0.01 F, C613 0.1 F, C614 10 6.3V TA B

IC612 CXD1204R

C617 0.01 F, C618 10 6.3V TA B, C619 0.1 F, R617 0, R659 82K

IC612 (I-17) AF PROCESS

L610 10UH 3225, L611 47UH 3225, L612 120UH

(H-11) Q612 SWITCH, R620 10K, Q612 DTC144TU

R621 1M, R635 560K, R653 150K, C647 0.1 F

Q614(J-16) Q613(J-17) HP F 2 HP F 1

Q613 2SC4081, Q614 2SC4081, Q619 2SC4081

R656 3900, C624 220P CH, R631 82K, C623 220P CH, R634 1K, R632 680, R654 0, C643 220P CH, R657 560, C625 120P CH, C624 820 CH, R633 2200, R636 2200, C627 0.1 F, C638 1 20V TA A

R637 820, R638 3300, R640 3300, R641 560, R639 6800, C626 0.1 F

Q619(G-14) AMP

TO VC-8IP BOARD(2/4) (CD,ED,EVR) — DDS SI, DDS SD, UN(DDS SCK), N.C.(FADER CONT), UN(COM ADJ), SERIAL CONT

(See Page 105)

TO VC-8IP BOARD (1/4) (TG/SH,SG,MX) — YH (AF)

(See Page 94)

(See Page 105)

(See Page 129)

TO VC-81P BOARD (TG/SH,SG)

TO VC-81P BOARD (2/4) (CD,ED,EVR)

TO LD-38P BOARD W701

CHECK PIN

IC610 (G-10) A/D CONVERTER

IC611 (F-10) EVR

IC612 (I-17) AF PROCESS

IC613 (H-19) AUTO FOCUS CPU

IC615 (F-16) AD REF

IC616 (G-17) SWITCH

Q610(G-11) SWITCH

Q612 (H-11) SWITCH

Q613(J-17) Q614(J-16) HP F1 HP F2

Q619(G-14) AMP

Q620(F-13) RECT

Q621(F-17) RECT

(G-18)

no mark : CAMERA REC mode
* : can not be measured

VC-81P BOARD (3/4)
(AF, FC)

TO VC-81P BOARD (1/4) (TG/SH,SG,MX)

(See Page 94)

VC-81P (CAMERA), CB-33P (LINK), CB-35P (LINK), JC-10P (LINK), LCD BLOCK PRINTED WIRING BOARDS

— Ref. No. VC-81P BOARD: 1000, CB-33P BOARD: 1000, CB-35P BOARD: 6000, JC-10P BOARD: 7000 series —

- **For printed wiring boards.**
- VC-81P, CB-33P boards are the printed wiring board which has four layers structure but inner two layers' patterns are omitted.
- LCD Block is replaced as blocks, so that there PRINTED WIRING BOARDS are omitted.

VC-81P BOARD (3/4)

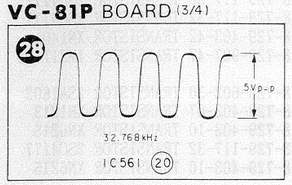

VC-81P BOARD

D101	D-14	Q564	J-22
D102	D-14	Q565	H-23
D131	D-11	Q566	I-23
D132	D-18	Q567	I-24
D141	A-17	Q568	I-25
D142	B-16	Q569	H-25
D301	B-29	Q570	I-25
D361	E-5	Q571	I-9
D362	E-25	Q572	J-8
D561	I-24	Q573	J-21
D562	I-5	Q610	G-11
D563	J-23	Q612	H-11
D611	G-18	Q613	J-17
		Q614	J-16
IC141	B-17	Q619	G-14
IC181	C-22	Q620	F-13
IC182	B-7	Q621	F-17
IC183	C-9		
IC251	D-26		
IC252	E-3		
IC253	C-5		
IC301	C-28		
IC302	F-3		
IC361	G-24		
IC362	F-25		
IC363	F-22		
IC364	H-22		
IC501	G-27		
IC502	G-28		
IC503	I-28		
IC561	H-7		
IC610	G-10		
IC611	F-20		
IC612	I-17		
IC613	H-19		
IC615	F-16		
IC616	G-17		
Q101	B-20		
Q102	C-20		
Q106	A-20		
Q107	D-10		
Q111	C-11		
Q112	C-10		
Q113	D-11		
Q131	D-19		
Q132	D-18		
Q135	D-13		
Q141	D-17		
Q142	A-16		
Q181	B-20		
Q182	B-20		
Q183	B-20		
Q184	D-21		
Q185	B-11		
Q186	B-12		
Q187	E-22		
Q188	E-23		
Q189	C-24		
Q190	C-25		
Q191	B-25		
Q192	A-22		
Q193	B-22		
Q194	D-22		
Q195	C-12		
Q196	B-21		
Q255	E-28		
Q256	E-5		
Q257	D-27		
Q302	D-29		
Q303	E-1		
Q307	E-2		
Q310	F-29		
Q311	F-2		
Q312	F-29		
Q313	F-2		
Q314	F-27		
Q315	F-2		
Q361	E-5		
Q362	F-6		
Q363	G-10		
Q364	F-9		
Q365	G-20		
Q367	H-21		
Q368	F-6		
Q501	G-1		
Q502	H-1		
Q503	G-4		
Q504	J-1		
Q505	I-26		
Q508	H-2		
Q509	J-29		
Q561	I-10		
Q562	J-22		
Q563	H-21		

VC-81 (P) BOARD, COMPLETE

****

< DIODE >

D101	8-719-404-46	DIODE MA110	D562	⚠ 8-719-420-51	DIODE MA729
D102	8-719-404-46	DIODE MA110	D563	8-719-404-46	DIODE MA110
D131	8-719-404-32	DIODE MA141WA	D611	8-719-404-32	DIODE MA141WA
D132	8-719-404-46	DIODE MA110			
D141	8-719-949-46	DIODE 1T32			
D142	8-719-949-46	DIODE 1T32			
D301	8-719-404-46	DIODE MA110			
D361	8-719-404-32	DIODE MA141WA			
D362	8-719-404-46	DIODE MA110			
D561	8-719-404-49	DIODE MA111			

< IC >

IC141	8-752-335-85	IC CXD2109Q	IC362
IC181	8-752-034-17	IC CXA1338R	IC363
IC182	8-752-330-15	IC CXL1503N	IC364
IC183	8-752-332-69	IC CXL5504M	IC501
IC251	8-752-034-21	IC CXA1339R	IC502
IC252	8-759-946-00	IC MB88341PFV	IC503
IC253	8-752-039-49	IC CXA1393AN	IC561
IC301	8-752-033-34	IC CXA1072R	IC610
IC302	8-759-946-00	IC MB88341PFV	IC611
IC361	8-759-037-60	IC MC68HC05N4-SC406667	IC612

VC-81P BOARD (COMPONENT SIDE)

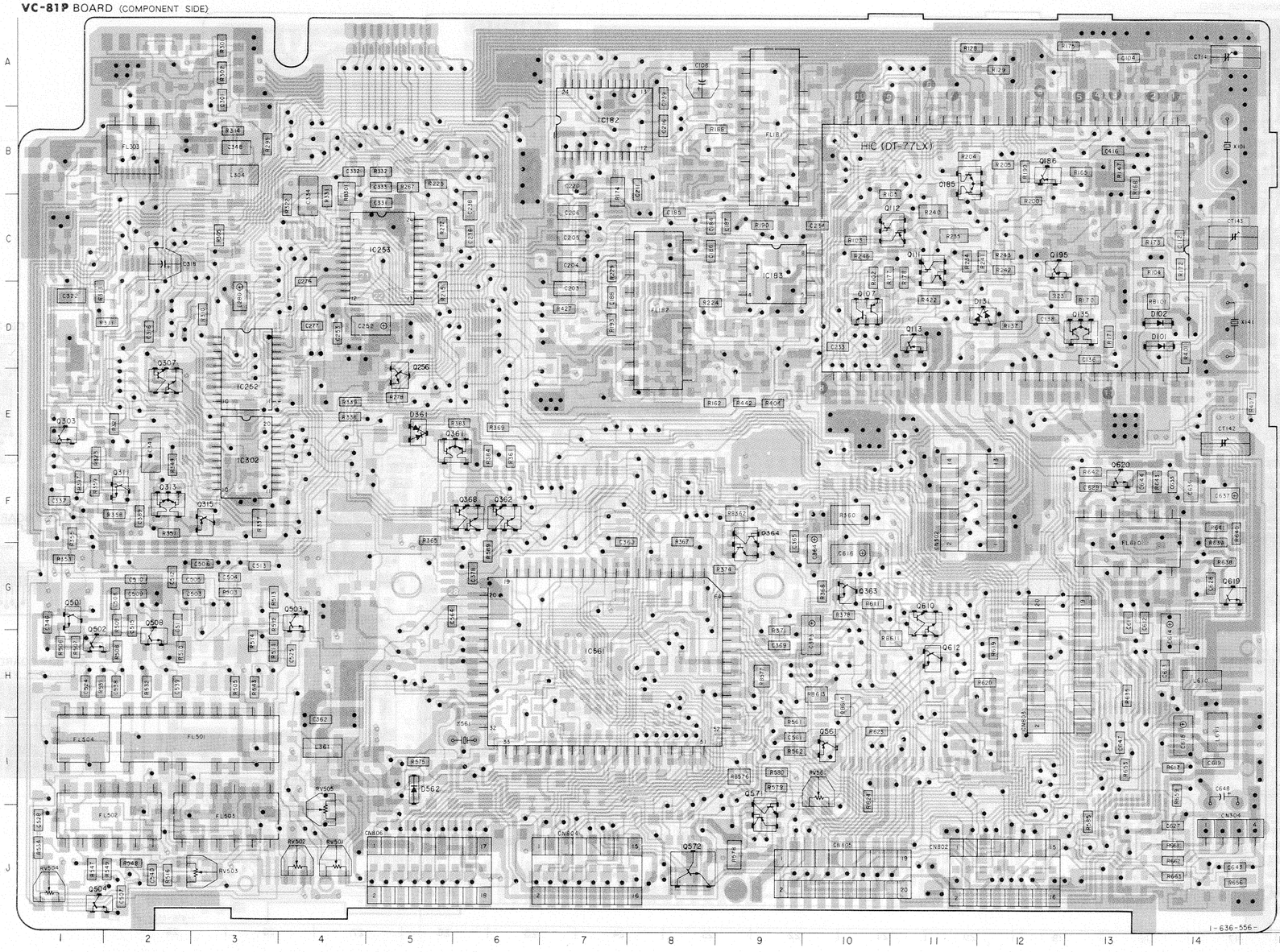

VC-81P BOARD (CONDUCTO

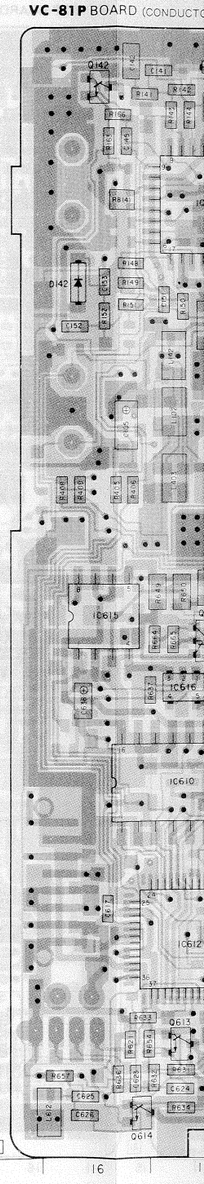

< IC >

C CXD2109Q	IC362	8-759-937-56	IC S-8054ALB-LM-S	IC613	8-759-038-59	IC MC68HC05C4-SC403112	
C CXA1338R	IC363	8-759-008-67	IC MC14066BF	IC615	8-759-100-94	IC uPC358G2	
C CXL1503N	IC364	8-759-150-05	IC uPC324G2	IC616	8-759-234-77	IC TC4S66F	
C CXL5504M	IC501	8-759-144-23	IC uPC1037GR				
C CXA1339R	IC502	8-759-144-23	IC uPC1037GR				
C MB88341PFV	IC503	8-752-031-01	IC CXA1047M				
C CXA1393AN	IC561	8-759-154-07	IC uPD7503GF-J59-3B8				
C CXA1072R	IC610	8-752-334-49	IC CXD1172AM				
C MB88341PFV	IC611	8-759-502-04	IC MB88346PFV				
C MC68HC05N4-SC406667	IC612	8-752-326-18	IC CXD1204R				

< TRANSISTOR >

Q101	8-729-907-47	TRANSISTOR IMZ1T108	Q141	8-729-117-32	TRANSISTOR 2SC4177	Q189	8-729-602-36	TRANSISTOR 2SA1602	Q257	8-729-907-47	TRANSISTOR IMZ1T108
Q102	8-729-907-47	TRANSISTOR IMZ1T108	Q142	8-729-117-32	TRANSISTOR 2SC4177	Q190	8-729-117-32	TRANSISTOR 2SC4177	Q302	8-729-602-36	TRANSISTOR 2SA1602
Q106	8-729-602-36	TRANSISTOR 2SA1602	Q181	8-729-117-32	TRANSISTOR 2SC4177	Q191	8-729-925-42	TRANSISTOR IMT2	Q303	8-729-602-36	TRANSISTOR 2SA1602
Q107	8-729-907-47	TRANSISTOR IMZ1T108	Q182	8-729-925-42	TRANSISTOR IMT2	Q192	8-729-925-42	TRANSISTOR IMT2	Q305	8-729-117-32	TRANSISTOR 2SC4177
Q111	8-729-907-47	TRANSISTOR IMZ1T108	Q183	8-729-602-36	TRANSISTOR 2SA1602	Q193	8-729-925-42	TRANSISTOR IMT2	Q307	8-729-402-81	TRANSISTOR XN4501
Q112	8-729-907-47	TRANSISTOR IMZ1T108	Q184	8-729-117-32	TRANSISTOR 2SC4177	Q194	8-729-602-36	TRANSISTOR 2SA1602	Q310	8-729-117-32	TRANSISTOR 2SC4177
Q113	8-729-921-58	TRANSISTOR DTA144TU	Q185	8-729-421-23	TRANSISTOR XN1216	Q195	8-729-602-36	TRANSISTOR 2SA1602	Q311	8-729-117-32	TRANSISTOR 2SC4177
Q131	8-729-421-23	TRANSISTOR XN1216	Q186	8-729-602-36	TRANSISTOR 2SA1602	Q196	8-729-117-32	TRANSISTOR 2SC4177	Q312	8-729-117-32	TRANSISTOR 2SC4177
Q132	8-729-117-32	TRANSISTOR 2SC4177	Q187	8-729-602-36	TRANSISTOR 2SA1602	Q255	8-729-907-47	TRANSISTOR IMZ1T108	Q313	8-729-403-42	TRANSISTOR XN1401
Q135	8-729-403-42	TRANSISTOR XN1401	Q188	8-729-117-32	TRANSISTOR 2SC4177	Q256	8-729-905-18	TRANSISTOR DTC144EU	Q314	8-729-907-47	TRANSISTOR IMZ1T108
									Q315	8-729-602-36	TRANSISTOR 2SA1602
									Q361	8-729-403-07	TRANSISTOR XN1213
									Q362	8-729-403-10	TRANSISTOR XN6215
									Q363	8-729-117-32	TRANSISTOR 2SC4177
									Q364	8-729-403-10	TRANSISTOR XN6215
									Q365	8-729-925-42	TRANSISTOR IMT2
									Q367	8-729-117-32	TRANSISTOR 2SC4177
									Q368	8-729-403-10	TRANSISTOR XN6215
									Q501	8-729-117-32	TRANSISTOR 2SC4177
									Q502	8-729-117-32	TRANSISTOR 2SC4177
									Q503	8-729-602-36	TRANSISTOR 2SA1602
									Q504	8-729-117-32	TRANSISTOR 2SC4177
									Q505	8-729-102-07	TRANSISTOR 2SC2223
									Q508	8-729-117-32	TRANSISTOR 2SC4177
									Q509	8-729-602-36	TRANSISTOR 2SA1602
									Q561	8-729-602-36	TRANSISTOR 2SA1602
									Q562	8-729-403-24	TRANSISTOR XN4210
									Q563	8-729-905-18	TRANSISTOR DTC144EU
									Q564	8-729-921-08	TRANSISTOR DTC144TU
									Q565	8-729-925-42	TRANSISTOR IMT2
									Q566	8-729-402-19	TRANSISTOR XN6501
									Q567	8-729-925-42	TRANSISTOR IMT2
									⚠ Q568	8-729-109-44	TRANSISTOR 2SK94
									Q569	8-729-602-36	TRANSISTOR 2SA1602
									Q570	8-729-905-15	TRANSISTOR DTC144WU
									Q571	8-729-920-39	TRANSISTOR IMT1US
									Q572	8-729-805-25	TRANSISTOR 2SB1121
									Q573	8-729-905-18	TRANSISTOR DTC144EU
									Q610	8-729-403-10	TRANSISTOR XN6215
									Q612	8-729-921-08	TRANSISTOR DTC144TU
									Q613	8-729-117-32	TRANSISTOR 2SC4177
									Q614	8-729-117-32	TRANSISTOR 2SC4177
									Q619	8-729-117-32	TRANSISTOR 2SC4177
									Q620	8-729-117-32	TRANSISTOR 2SC4177
									Q621	8-729-402-19	TRANSISTOR XN6501

VC-81P BOARD (CONDUCTOR SIDE)

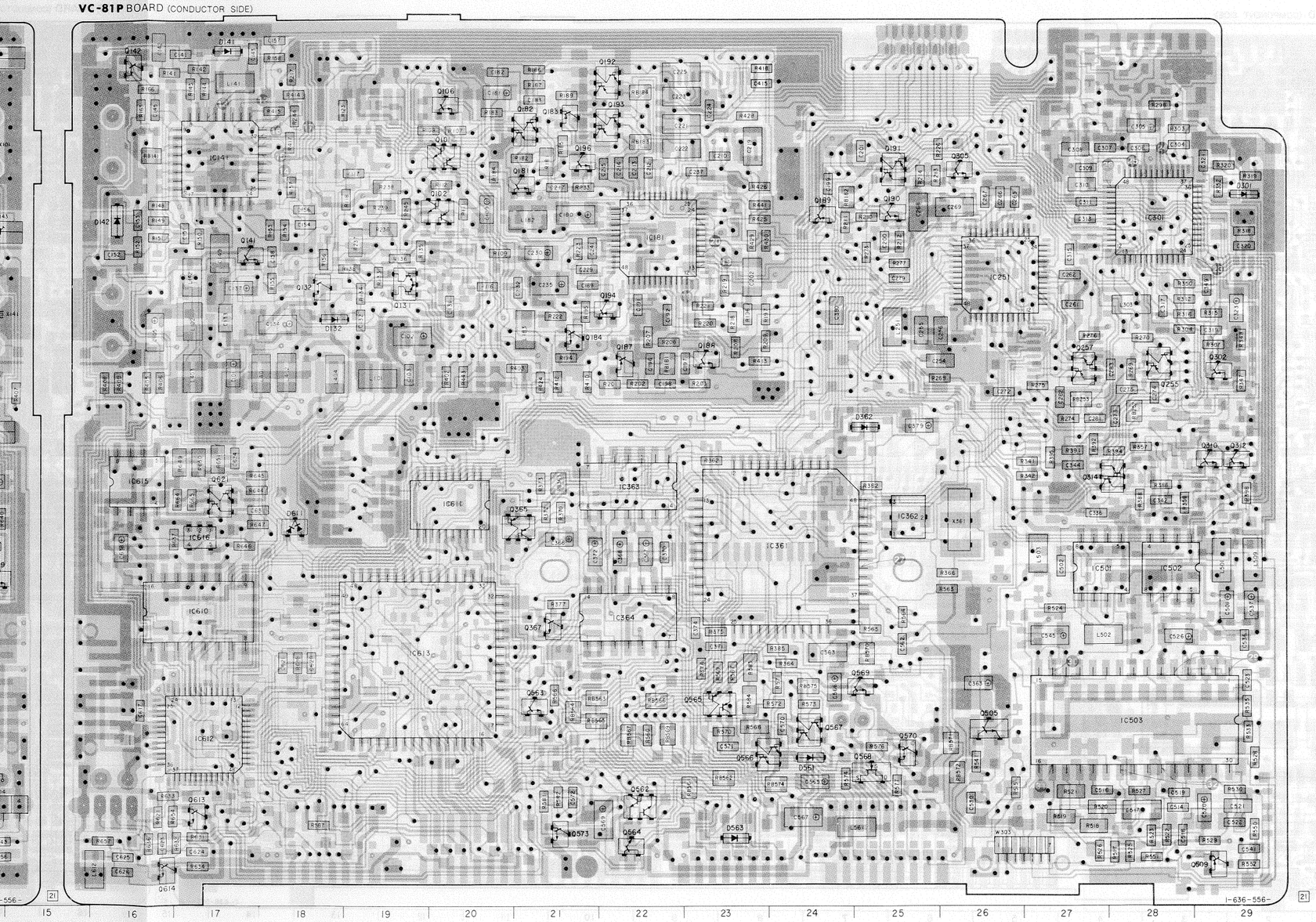

CB-35P BOARD (COMPONENT SIDE)

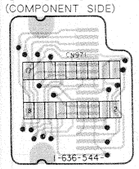

CB-35P BOARD (CONDUCTOR SIDE)

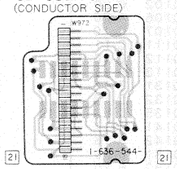

JC-10P BOARD (CONDUCTOR SIDE)

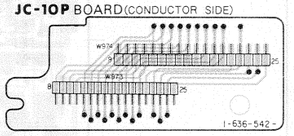

CB-33P BOARD (CONDUCTOR SIDE)

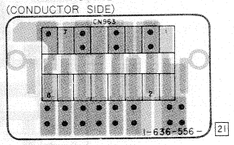

CB-33P BOARD (COMPONENT SIDE)

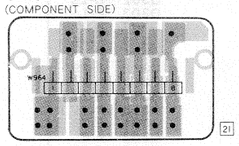

VC-81P (CAMERA), CB-33P (LINK), CB-35P (LINK), JC-10P (LINK) PRINTED WIRING BOARDS

— Ref. No. VC-81P BOARD: 1000, CB-33P BOARD: 1000, CB-35P BOARD: 6000, JC-10P BOARD: 7000 series —

- **For printed wiring boards.**
- VC-81P, CB-33P boards are the printed wiring board which has four layers structure but inner two layers' patterns are omitted.

VC-81P BOARD (4/4)

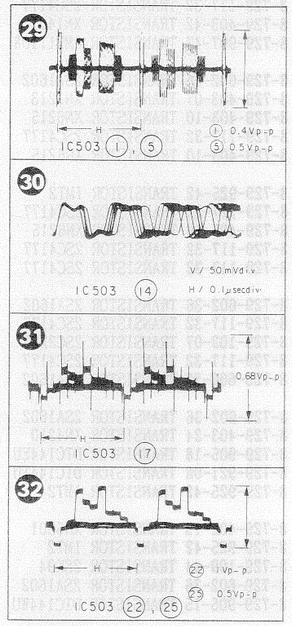

VC-81P BOARD

D101	D-14	Q564	J-22
D102	D-14	Q565	H-23
D131	D-11	Q566	I-23
D132	D-18	Q567	I-24
D141	A-17	Q568	I-25
D142	B-16	Q569	H-25
D301	B-29	Q570	I-25
D361	E-5	Q571	I-9
D362	E-25	Q572	J-8
D561	I-24	Q573	J-21
D562	I-5	Q610	G-11
D563	J-23	Q612	H-11
D611	G-18	Q613	J-17
		Q614	J-16
IC141	B-17	Q619	G-14
IC181	C-22	Q620	F-13
IC182	B-7	Q621	F-17
IC183	C-9		
IC251	D-26		
IC252	E-3		
IC253	C-5		
IC301	C-28		
IC302	F-3		
IC361	G-24		
IC362	F-25		
IC363	F-22		
IC364	H-22		
IC501	G-27		
IC502	G-28		
IC503	I-28		
IC561	H-7		
IC610	G-10		
IC611	F-20		
IC612	I-17		
IC613	H-19		
IC615	F-16		
IC616	G-17		
Q101	B-20		
Q102	C-20		
Q106	A-20		
Q107	D-10		
Q111	C-11		
Q112	C-10		
Q113	D-11		
Q131	D-19		
Q132	D-18		
Q135	D-13		
Q141	D-17		
Q142	A-16		
Q181	B-20		
Q182	B-20		
Q183	B-20		
Q184	D-21		
Q185	B-11		
Q186	B-12		
Q187	E-22		
Q188	E-23		
Q189	C-24		
Q190	C-25		
Q191	B-25		
Q192	A-22		
Q193	B-22		
Q194	D-22		
Q195	C-12		
Q196	B-21		
Q255	E-28		
Q256	E-5		
Q257	D-27		
Q302	D-29		
Q303	E-1		
Q307	E-2		
Q310	F-29		
Q311	F-2		
Q312	F-29		
Q313	F-2		
Q314	F-27		
Q315	F-2		
Q361	E-5		
Q362	F-6		
Q363	G-10		
Q364	F-9		
Q365	G-20		
Q367	H-21		
Q368	F-6		
Q501	G-1		
Q502	H-1		
Q503	G-4		
Q504	J-1		
Q505	I-26		
Q508	H-2		
Q509	J-29		
Q561	I-10		
Q562	J-22		
Q563	H-21		

VC-81 (P) BOARD, COMPLETE

< DIODE >

D101	8-719-404-46	DIODE MA110	D562 ⚠	8-719-420-51	DIODE MA729
D102	8-719-404-46	DIODE MA110	D563	8-719-404-46	DIODE MA110
D131	8-719-404-32	DIODE MA141WA	D611	8-719-404-32	DIODE MA141WA
D132	8-719-404-46	DIODE MA110			
D141	8-719-949-46	DIODE 1T32			
D142	8-719-949-46	DIODE 1T32			
D301	8-719-404-46	DIODE MA110			
D361	8-719-404-32	DIODE MA141WA			
D362	8-719-404-46	DIODE MA110			
D561	8-719-404-49	DIODE MA111			

< IC >

IC141	8-752-335-85	IC CXD2109Q
IC181	8-752-034-17	IC CXA1338R
IC182	8-752-330-15	IC CXL1503N
IC183	8-752-332-69	IC CXL5504M
IC251	8-752-034-21	IC CXA1339R
IC252	8-759-946-00	IC MB88341PFV
IC253	8-752-039-49	IC CXA1393AN
IC301	8-752-033-34	IC CXA1072R
IC302	8-759-946-00	IC MB88341PFV
IC361	8-759-037-60	IC MC68HC05N4-SC406667
IC362	8-759	
IC363	8-759	
IC364	8-759	
IC501	8-759	
IC502	8-759	
IC503	8-752	
IC561	8-759	
IC610	8-752	
IC611	8-759	
IC612	8-752	

VC-81P BOARD (COMPONENT SIDE)

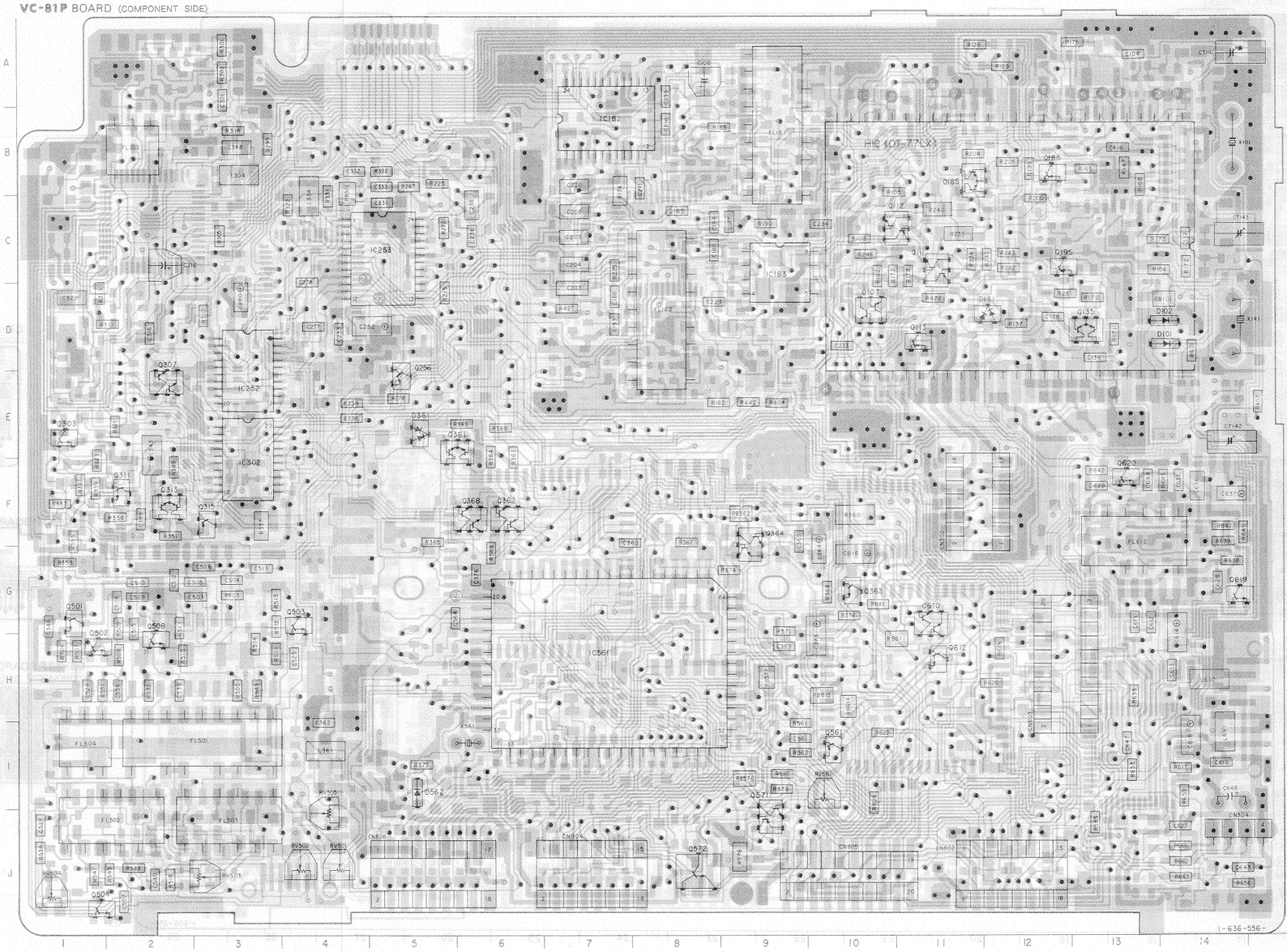

VC-81P BOARD (CONDUCTOR SIDE)

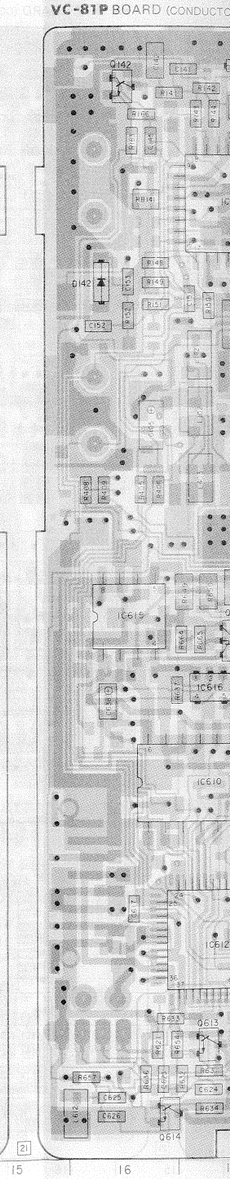

< TRANSISTOR >

09Q	IC362	8-759-937-56	IC S-8054ALB-LM-S	IC613	8-759-038-59	IC MC68HC05C4-SC403112	Q101	8-729-907-47	TRANSISTOR IMZ1T108	Q141	8-729-117-32	TRANSISTOR 2SC4177	Q189	8-729-602-36	TRANSISTOR 2SA1602	Q257	8-729-907-47	TRANSISTOR IMZ1T108
88R	IC363	8-759-008-67	IC MC14066BF	IC615	8-759-100-94	IC uPC358G2	Q102	8-729-907-47	TRANSISTOR IMZ1T108	Q142	8-729-117-32	TRANSISTOR 2SC4177	Q190	8-729-117-32	TRANSISTOR 2SC4177	Q302	8-729-602-36	TRANSISTOR 2SA1602
03N	IC364	8-759-150-05	IC uPC324G2	IC616	8-759-234-77	IC TC4S66F	Q106	8-729-602-36	TRANSISTOR 2SA1602	Q181	8-729-117-32	TRANSISTOR 2SC4177	Q191	8-729-925-42	TRANSISTOR IMT2	Q303	8-729-602-36	TRANSISTOR 2SA1602
04M	IC501	8-759-144-23	IC uPC1037GR				Q107	8-729-907-47	TRANSISTOR IMZ1T108	Q182	8-729-925-42	TRANSISTOR IMT2	Q192	8-729-925-42	TRANSISTOR IMT2	Q305	8-729-117-32	TRANSISTOR 2SC4177
89R	IC502	8-759-144-23	IC uPC1037GR				Q111	8-729-907-47	TRANSISTOR IMZ1T108	Q183	8-729-602-36	TRANSISTOR 2SA1602	Q193	8-729-925-42	TRANSISTOR IMT2	Q307	8-729-402-81	TRANSISTOR XN4501
41PFV	IC503	8-752-031-01	IC CXA1047M				Q112	8-729-907-47	TRANSISTOR IMZ1T108	Q184	8-729-117-32	TRANSISTOR 2SC4177	Q194	8-729-602-36	TRANSISTOR 2SA1602	Q310	8-729-117-32	TRANSISTOR 2SC4177
93AN	IC561	8-759-154-07	IC uPD7503GF-J59-3B8				Q113	8-729-921-58	TRANSISTOR DTA144TU	Q185	8-729-421-23	TRANSISTOR XN1216	Q195	8-729-602-36	TRANSISTOR 2SA1602	Q311	8-729-117-32	TRANSISTOR 2SC4177
72R	IC610	8-752-334-49	IC CXD1172AM				Q131	8-729-421-23	TRANSISTOR XN1216	Q186	8-729-602-36	TRANSISTOR 2SA1602	Q196	8-729-117-32	TRANSISTOR 2SC4177	Q312	8-729-117-32	TRANSISTOR 2SC4177
41PFV	IC611	8-759-502-04	IC MB88346PFV				Q132	8-729-117-32	TRANSISTOR 2SC4177	Q187	8-729-602-36	TRANSISTOR 2SA1602	Q255	8-729-907-47	TRANSISTOR IMZ1T108	Q313	8-729-403-42	TRANSISTOR XN1401
C05N4-SC406667	IC612	8-752-326-18	IC CXD1204R				Q135	8-729-403-42	TRANSISTOR XN1401	Q188	8-729-117-32	TRANSISTOR 2SC4177	Q256	8-729-905-18	TRANSISTOR DTC144EU	Q314	8-729-907-47	TRANSISTOR IMZ1T108

VC-81P BOARD (CONDUCTOR SIDE)

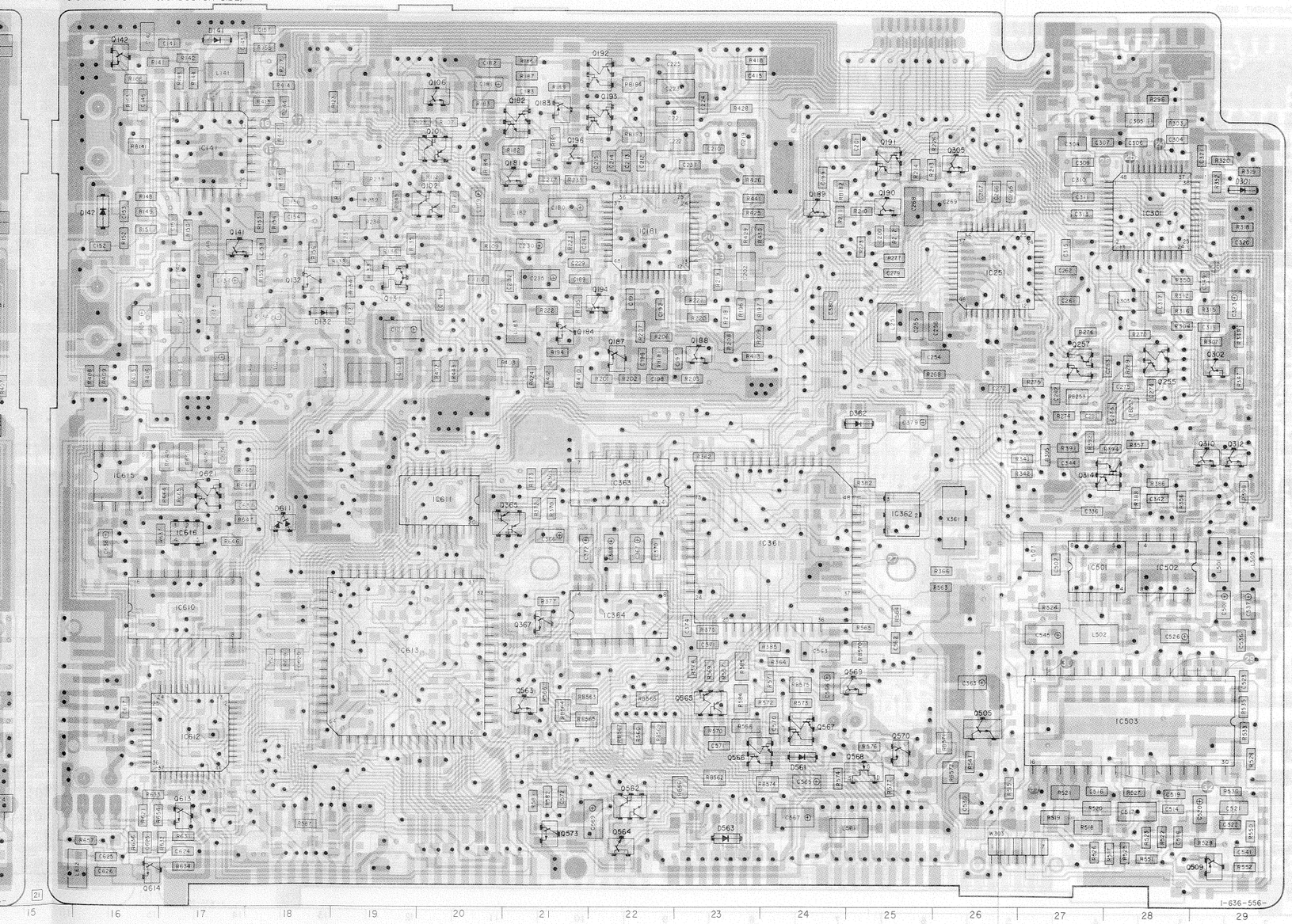

Q315	8-729-602-36	TRANSISTOR	2SA1602
Q361	8-729-403-07	TRANSISTOR	XN1213
Q362	8-729-403-10	TRANSISTOR	XN6215
Q363	8-729-117-32	TRANSISTOR	2SC4177
Q364	8-729-403-10	TRANSISTOR	XN6215
Q365	8-729-925-42	TRANSISTOR	IMT2
Q367	8-729-117-32	TRANSISTOR	2SC4177
Q368	8-729-403-10	TRANSISTOR	XN6215
Q501	8-729-117-32	TRANSISTOR	2SC4177
Q502	8-729-117-32	TRANSISTOR	2SC4177
Q503	8-729-602-36	TRANSISTOR	2SA1602
Q504	8-729-117-32	TRANSISTOR	2SC4177
Q505	8-729-102-07	TRANSISTOR	2SC2223
Q508	8-729-117-32	TRANSISTOR	2SC4177
Q509	8-729-602-36	TRANSISTOR	2SA1602
Q561	8-729-602-36	TRANSISTOR	2SA1602
Q562	8-729-403-24	TRANSISTOR	XN4210
Q563	8-729-905-18	TRANSISTOR	DTC144EU
Q564	8-729-921-08	TRANSISTOR	DTC144TU
Q565	8-729-925-42	TRANSISTOR	IMT2
Q566	8-729-402-19	TRANSISTOR	XN6501
Q567	8-729-925-42	TRANSISTOR	IMT2
Q568 ⚠	8-729-109-44	TRANSISTOR	2SK94
Q569	8-729-602-36	TRANSISTOR	2SA1602
Q570	8-729-905-15	TRANSISTOR	DTC144WU
Q571	8-729-920-39	TRANSISTOR	IMT1US
Q572	8-729-805-25	TRANSISTOR	2SB1121
Q573	8-729-905-18	TRANSISTOR	DTC144EU
Q610	8-729-403-10	TRANSISTOR	XN6215
Q612	8-729-921-08	TRANSISTOR	DTC144TU
Q613	8-729-117-32	TRANSISTOR	2SC4177
Q614	8-729-117-32	TRANSISTOR	2SC4177
Q619	8-729-117-32	TRANSISTOR	2SC4177
Q620	8-729-117-32	TRANSISTOR	2SC4177
Q621	8-729-402-19	TRANSISTOR	XN6501

CB-35P BOARD (COMPONENT SIDE)

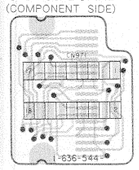

CB-35P BOARD (CONDUCTOR SIDE)

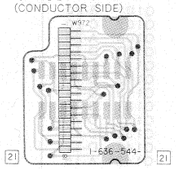

JC-10P BOARD (CONDUCTOR SIDE)

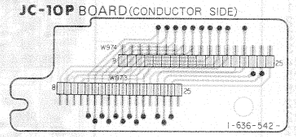

CB-33P BOARD (CONDUCTOR SIDE)

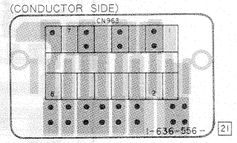

CB-33P BOARD (COMPONENT SIDE)

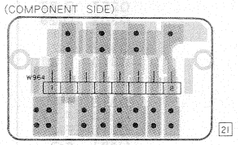

- **SIGNAL PATH**

	VIDEO SIGNAL			AUDIO SIGNAL
	CHROMA	Y	Y/CHROMA/DATA	
REC	➡	➡		
PB				

VC-81P (CAMERA) SCHEMATIC DIAGRAM

— Ref. No. VC-81P BOARD: 2000 series —

VC-81P BOARD (4/4) (CR)

no mark : CAMERA POWER ON mode

IC501 (G-27) CARRIER CONV

(G-1),(H-1) Q501,502 BURST EMPH

(H-2) Q508 3.58MHz CHROMA BUFFER

(G-28) IC502 CHROMA CONV

(G-4) Q503 743KHz CHROMA BUFFER

TO VC-81P BOARD (1/4) (SG)

(See Page 96)

TO VC-81P BOARD(3/4) (AF,FC)

(See Page 109)

TO VC-81P BOARD(2/4) (ED)

(See Page 108)

(J-29) Q509 CLIP COMPENSATOR

(I-28) IC503 PRE-EMPHASIS FM MOD

(I-26) Q504 REC C BUFFER

(J-1) Q505 REC Y BUFFER

W303

FP-184 FLEXIBLE TO CB-352P BOARD W952

(See Page 148)

09

CD-50P (CCD IMAGER) PRINTED WIRING BOARD

— Ref. No. CD-50P BOARD: 4000 series —

- **For printed wiring boards.**
- CD-50P board is the printed wiring board which has four layers structure but inner two iayers' patterns are omitted.

CD-50P BOARD
IC901 B-2
Q901 C-3

CD-50 (P) BOARD, COMPLETE
****

< TRANSISTOR >

Q901 8-765-420-02 TRANSISTOR 2SK300-3

CD-50P BOARD (CONDUCTOR SIDE)

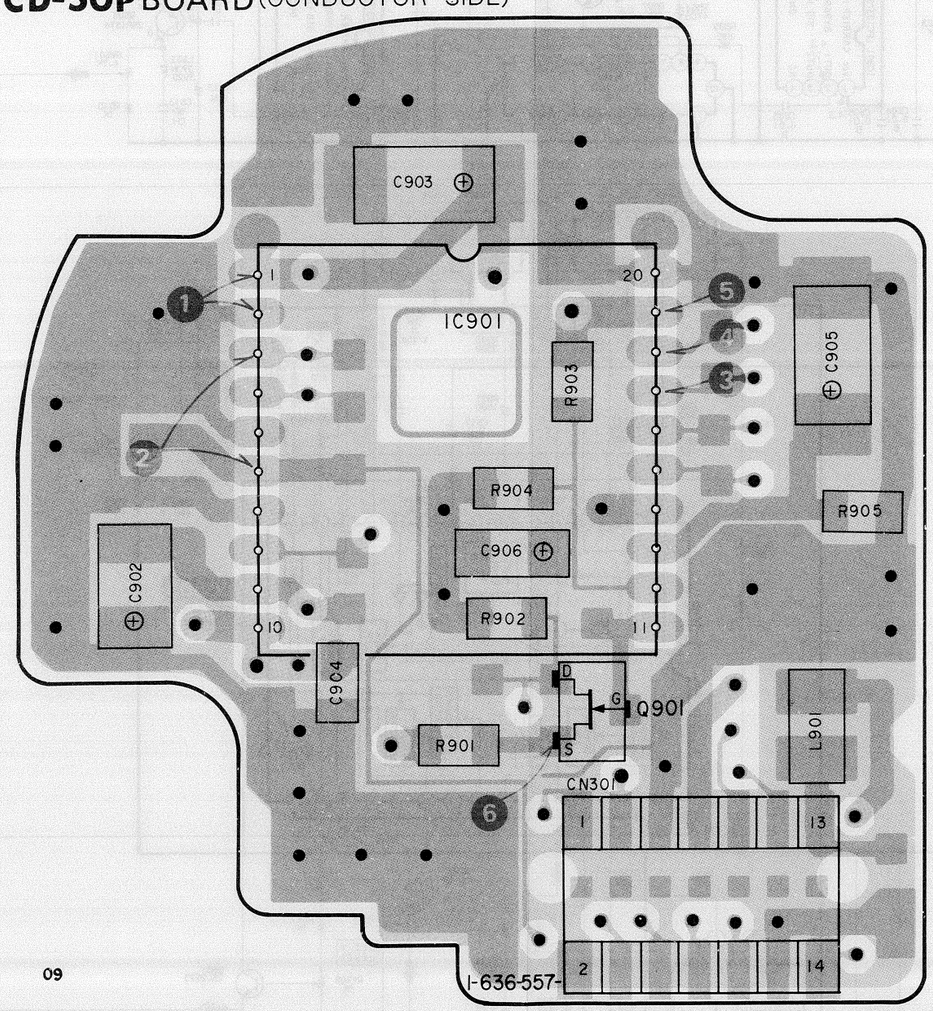

CD-50P BOARD

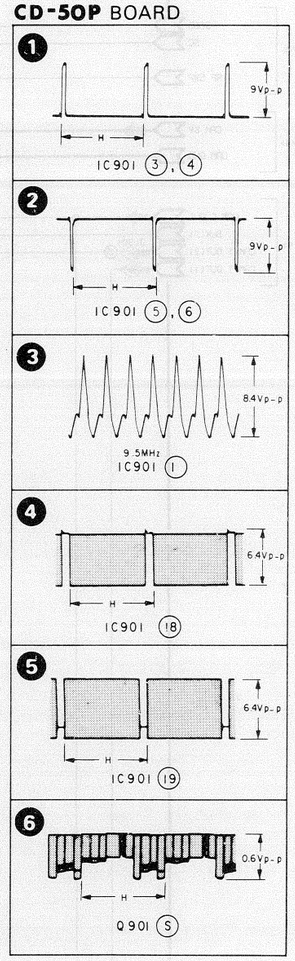

CD-50P (CCD IMAGER) SCHEMATIC DIAGRAM

— Ref. No. CD-50P BOARD: 4000 series —

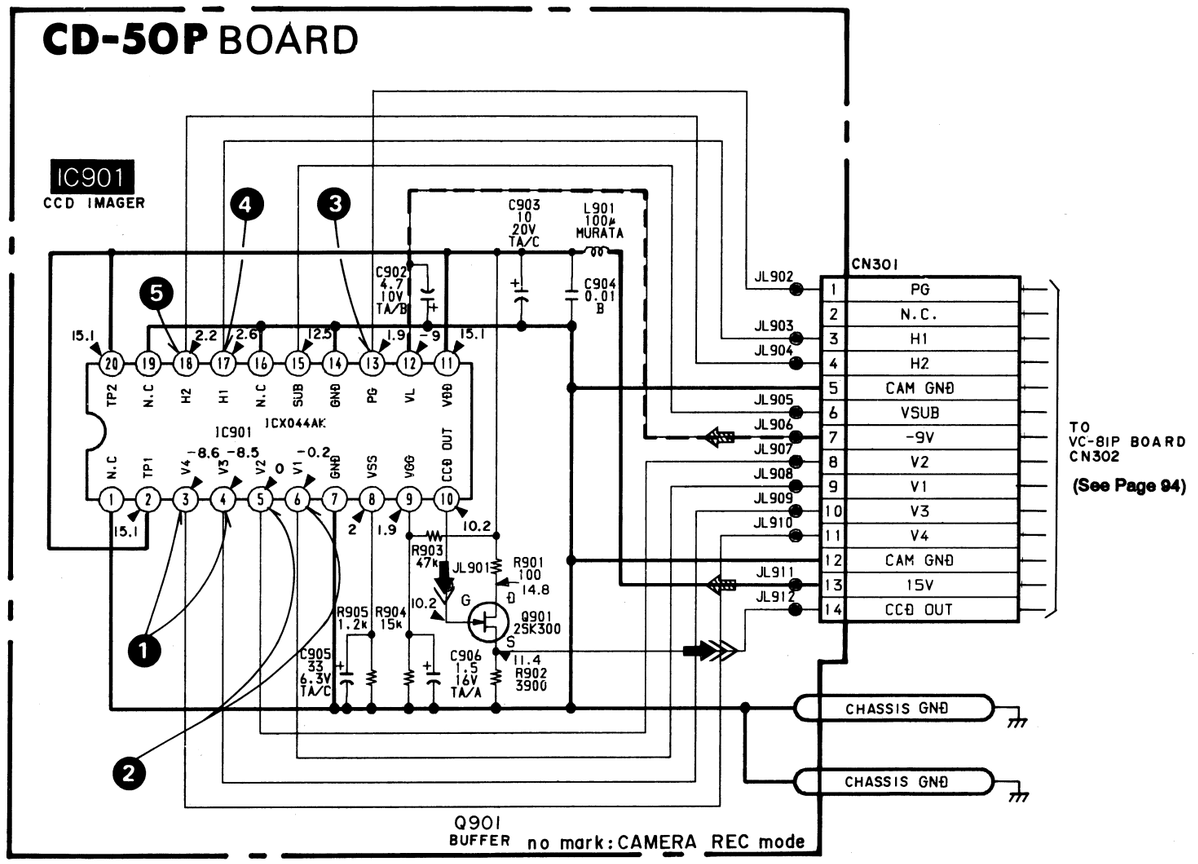

09

• **SIGNAL PATH**

	VIDEO SIGNAL			AUDIO SIGNAL
	CHROMA	Y	Y/CHROMA/DATA	
REC			➡	
PB				

CAUTIONS FOR REPLACING THE CCD IMAGER

- According to type of CCD imager (IC901 on the CD-50P board), it is necessary to require the compensating ROM (IC001 on the DT-77K board).
  The repairing CCD imager does not require the compensating ROM.
  So when replacing the CCD imager on which the compensating ROM is installed, remove the compensating ROM before replacement.
- Since the mounted CD-50P and DT-77K boards which are supplied asa repair parts are not installed IC901 and IC001 respectively, replace the respective ICs from the previous board to the new when replacing each board.
- When you replaced the CCD imager, porform the overall camera head adjustment.
- CCD imager has such a structure that it may be spoiled by static electricityy, so handle it with a care similar for MOS IC. Further, be sure that the light receiving part has no stick of dust and no entry of bright light.

LD-38P (IRIS/FOCUS/ZOOM MOTOR DRIVE) PRINTED WIRING BOARD

— Ref. No. LD-38P BOARD: 3000 series —

- **For printed wiring boards.**
- LD-38P board is the printed wiring board which has four layers structure but inner two layers' patterns are omitted.

LD-38 (P) BOARD, COMPLETE
****

< DIODE >

D701	8-719-404-46	DIODE MA110

< IC >

IC701	8-759-037-20	IC MPC1737MR
IC702	8-759-100-94	IC uPC358G2
IC702	8-759-998-98	IC LM358DR
IC703	8-759-981-82	IC RC3414M

< TRANSISTOR >

Q701	8-729-905-15	TRANSISTOR DTC144WU
Q702	8-729-920-39	TRANSISTOR IMT1US
Q703	8-729-905-61	TRANSISTOR DTC124EU
Q704	8-729-905-23	TRANSISTOR 2SA1576-R
Q706	8-729-805-25	TRANSISTOR 2SB1121
Q707	8-729-117-32	TRANSISTOR 2SC4177

LD-38P BOARD (COMPONENT SIDE)

LD-38P BOARD

D701 E-7

IC701 A-7
IC702 E-5
IC703 E-6

Q701 D-7
Q702 A-5
Q703 A-4
Q704 D-8
Q706 D-8
Q707 D-8

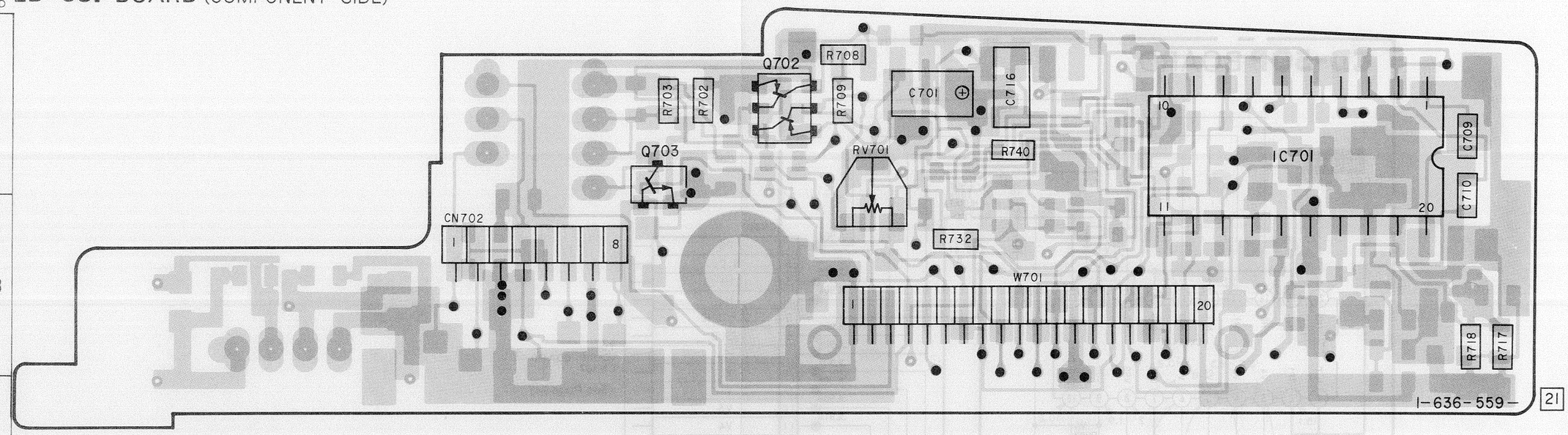

LD-38P BOARD (CONDUCTOR SIDE)

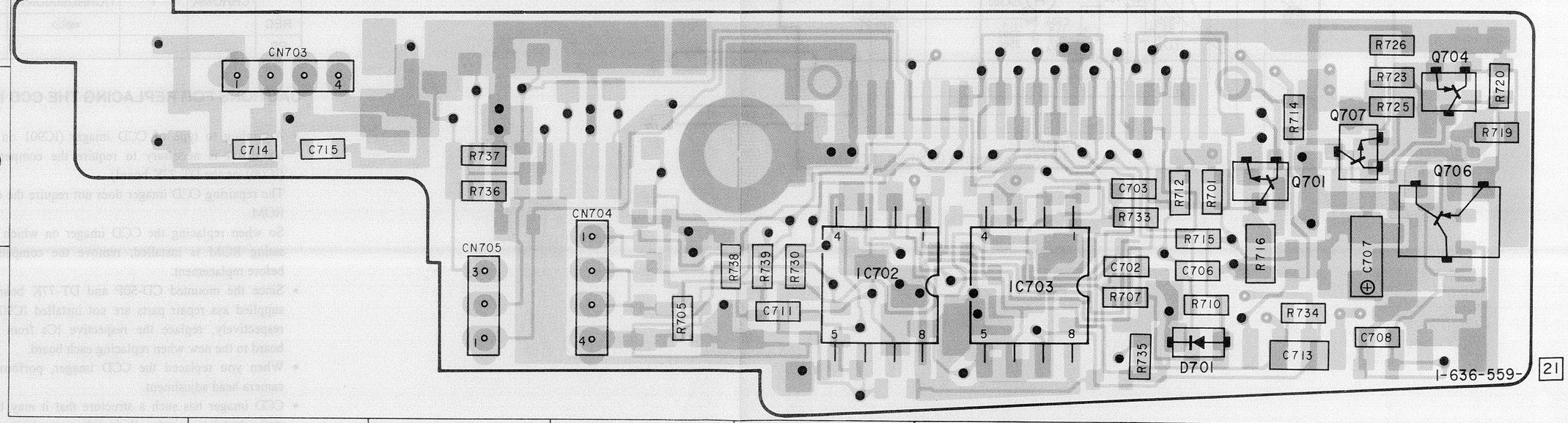

LD-38P (IRIS/FOCUS/ZOOM MOTOR DRIVE) SCHEMATIC DIAGRAM

— Ref. No. LD-38P BOARD: 3000 series —

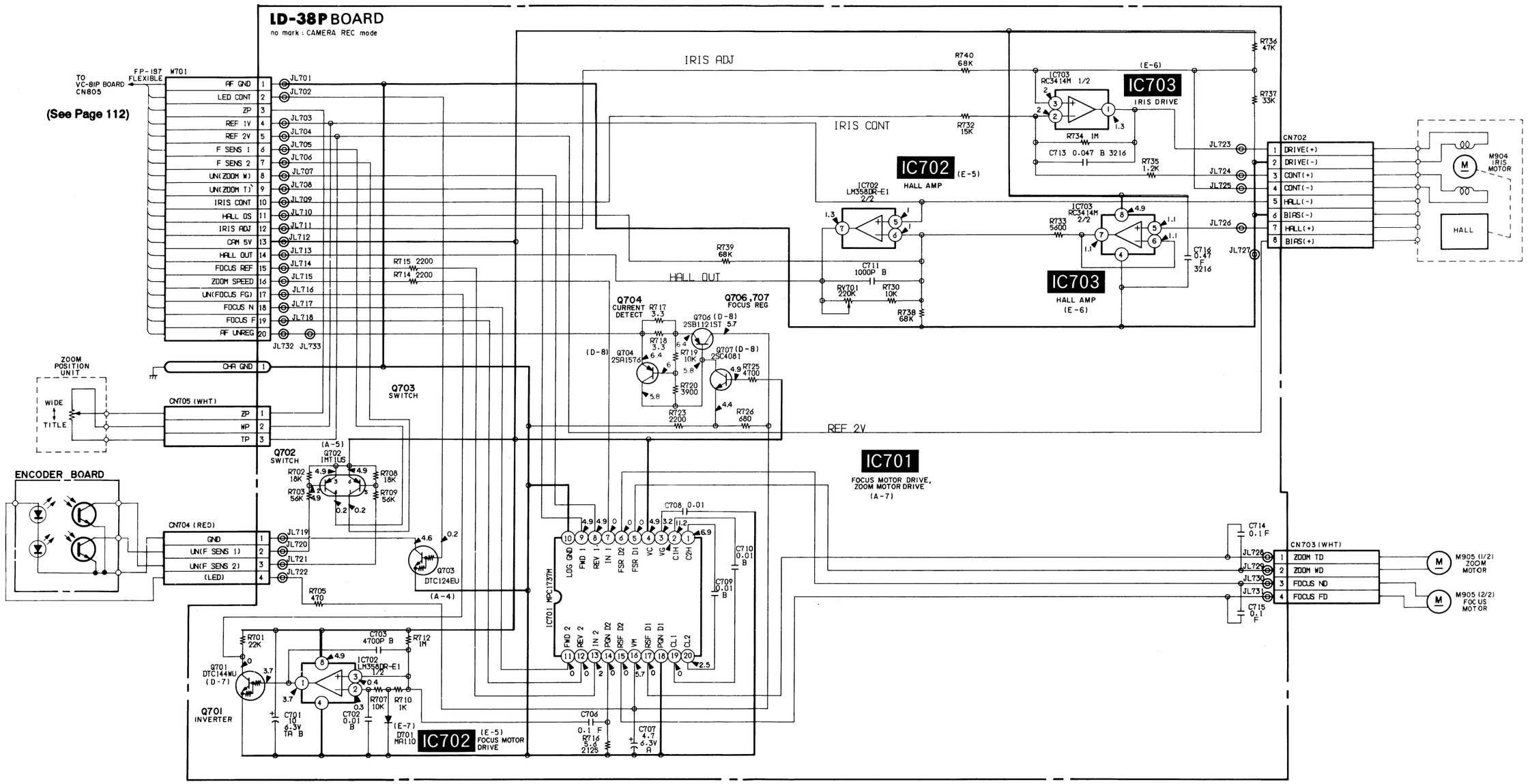

TI-32P (DIGITAL TITLER) PRINTED WIRING BOARD

— Ref. No. TI-32P BOARD: 4000 series —

DIGITAL TITLER

- **For printed wiring boards.**
- TI-32P board is the printed wiring board which has four layers structure but inner two layers' patterns are omitted.

TI-32 (P) BOARD, COMPLETE
****

< DIODE >

D801	8-713-300-88	DIODE 1T33C-01

< IC >

IC801	8-759-979-96	IC MB8464A-15LLPF
IC802	8-759-150-75	IC uPD6145G-621-E1
IC803	8-759-983-54	IC MB670479U

< TRANSISTOR >

Q801	8-729-905-18	TRANSISTOR DTC144EU
Q802	8-729-403-24	TRANSISTOR XN4210

TI-32P BOARD

D801	A-7
IC801	A-6
IC802	B-2
IC803	B-3
Q801	A-5
Q802	B-7

TI-32P BOARD (COMPONENT SIDE)

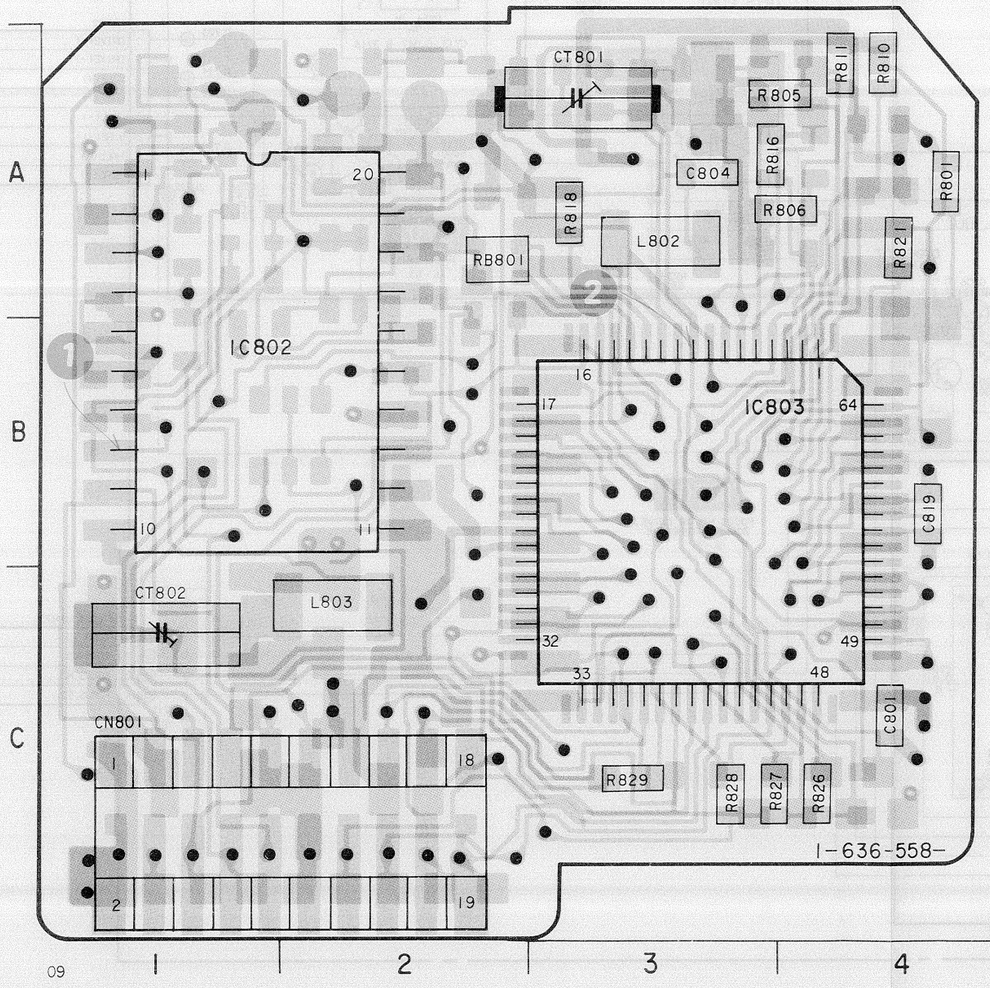

TI-32P BOARD (CONDUCTOR SIDE)

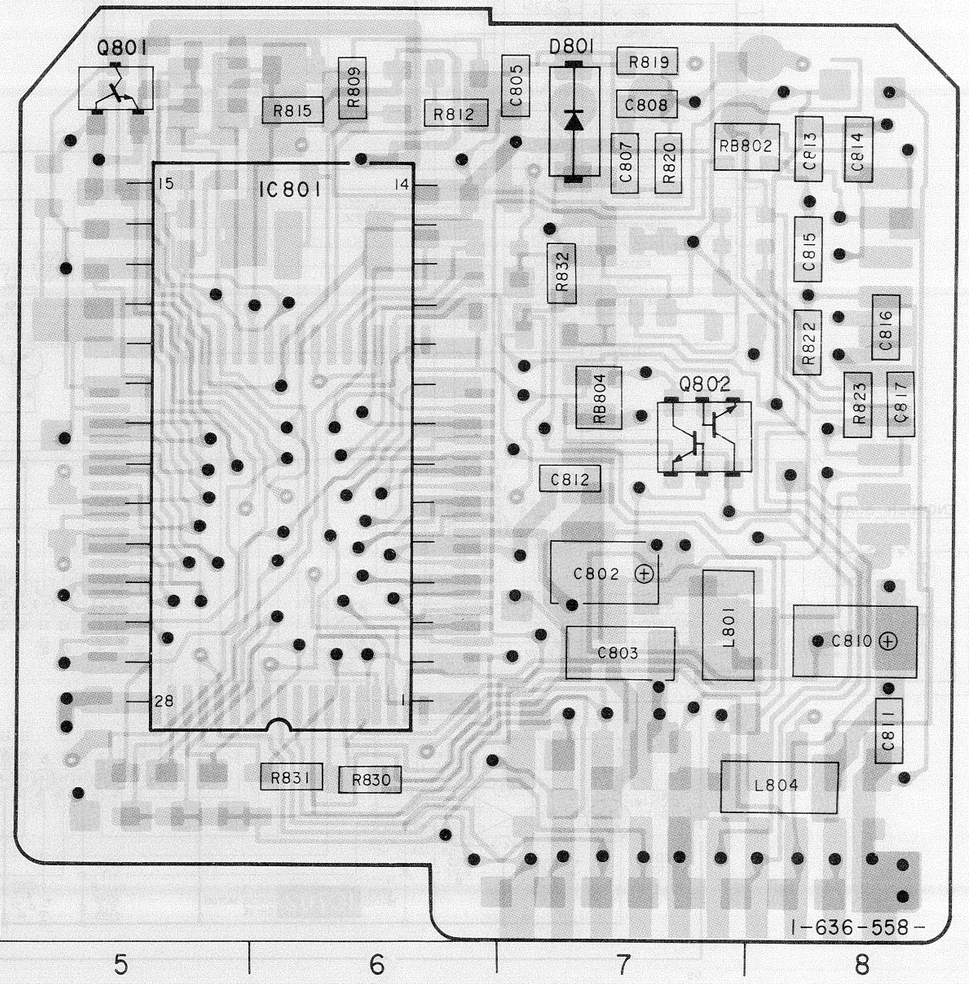

— Ref. No. TI-32P BOARD: 4000 series —

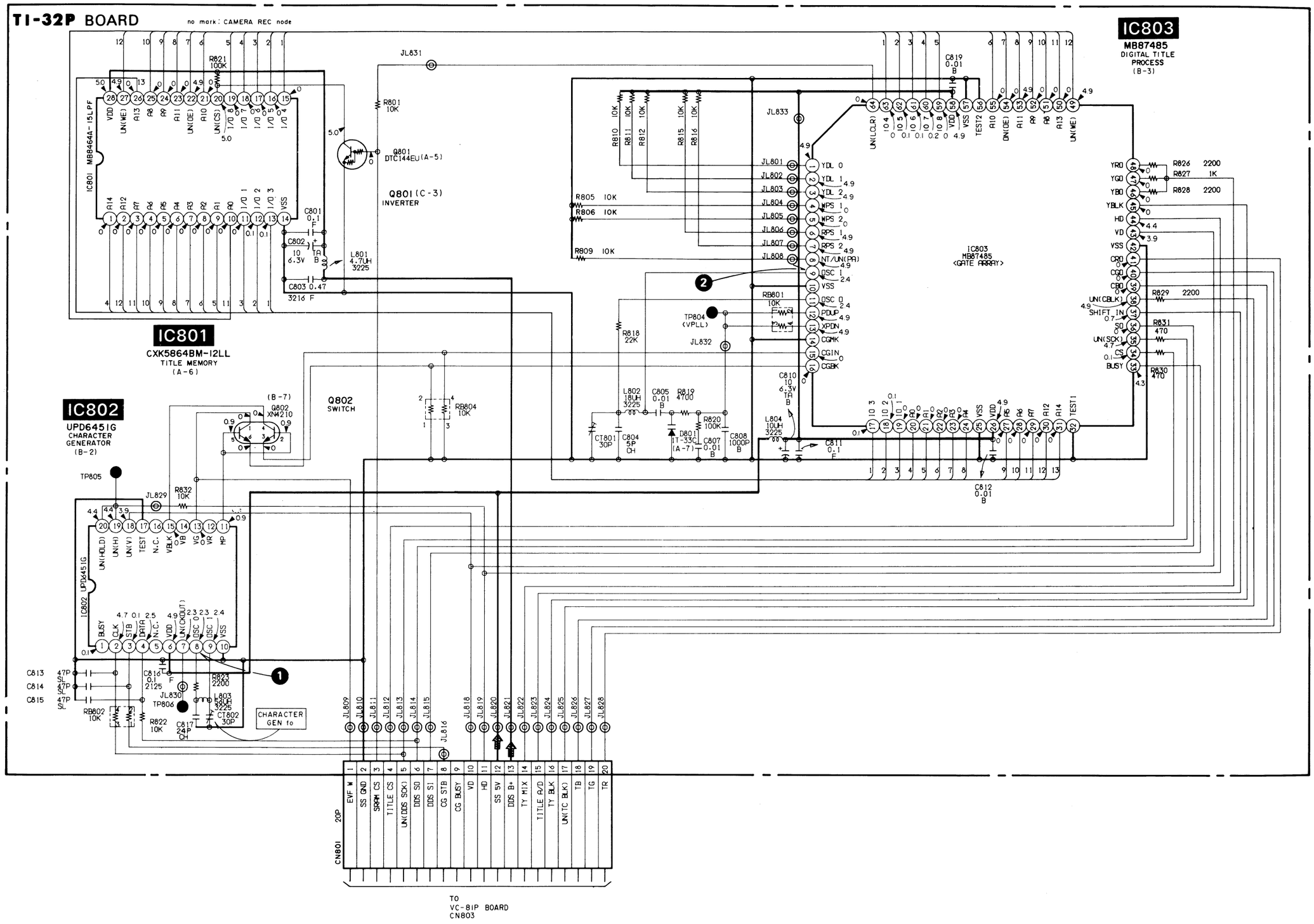

(See Page 110)

7 | 8 | 9 | 10 | 11 | 12 | 13 | 14 | 15

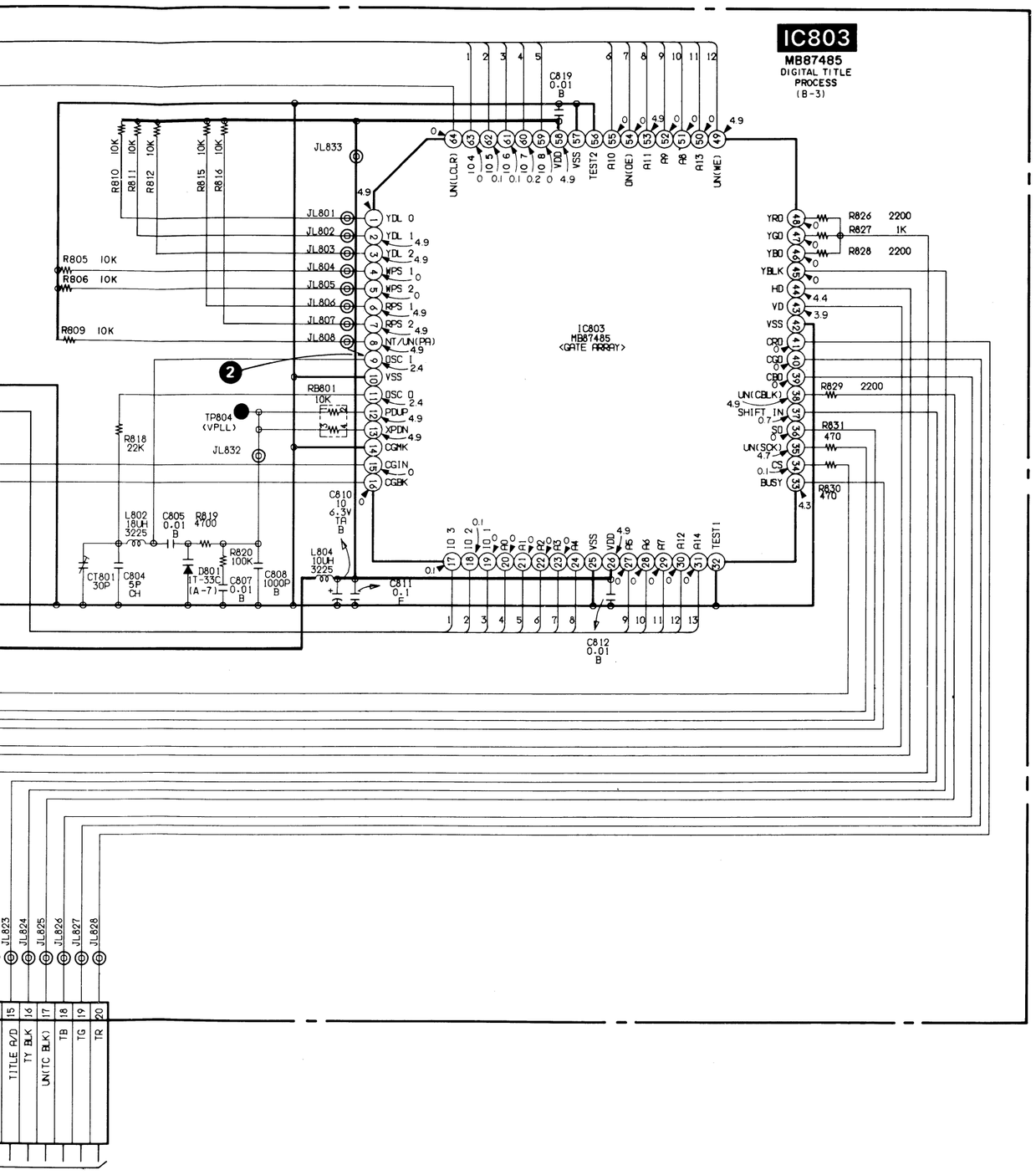

— 134 —

TI-32P BOARD

1

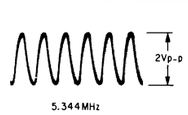

IC802 (8) CAMERA REC

2

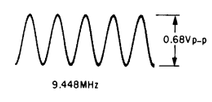

IC803 (9) CAMERA REC

— 135 —

VS-69 (HEAD AMP) SCHEMATIC DIAGRAM

— Ref. No. VS-69 BOARD: 2000 series —

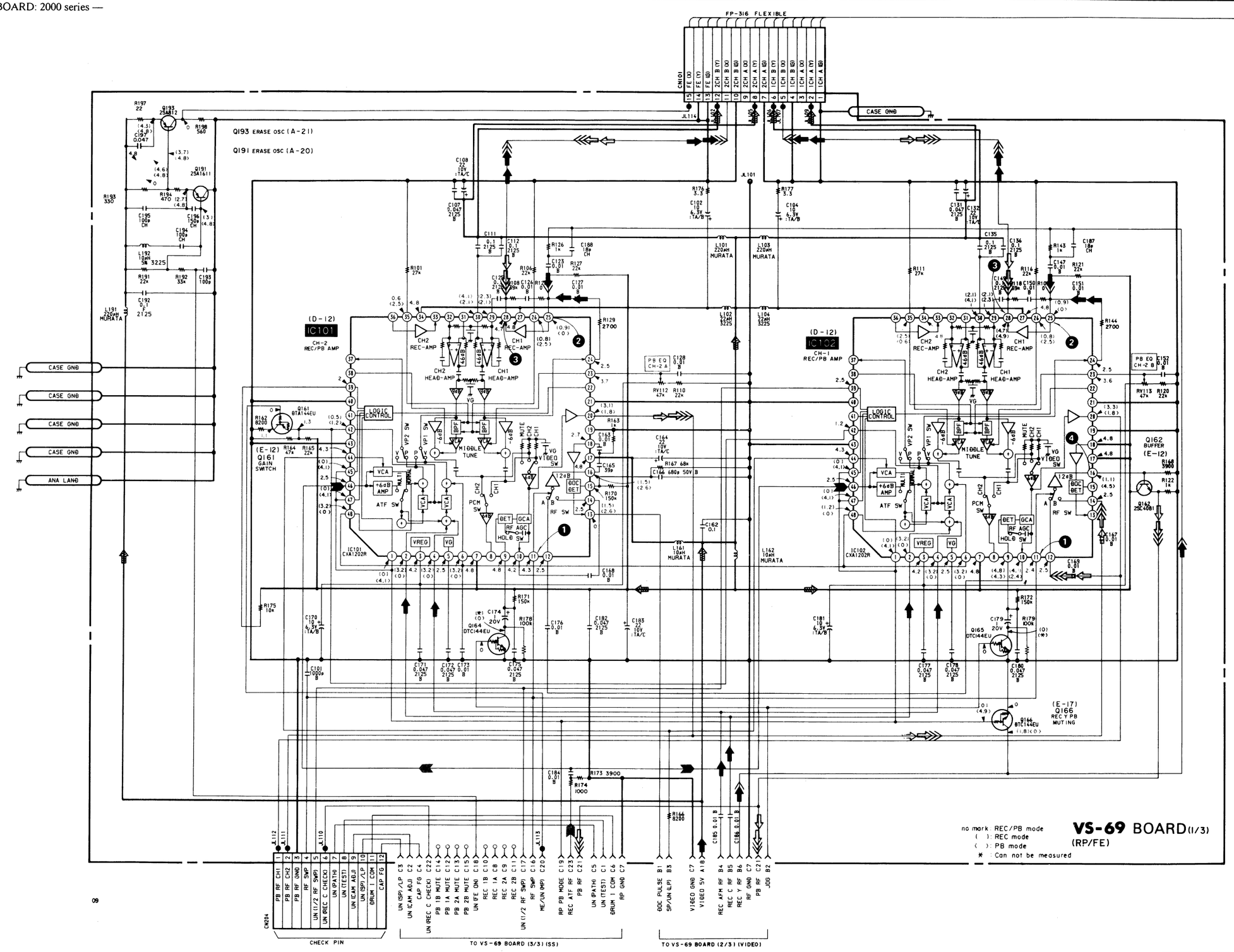

(See Page 155)

(See Page 148)

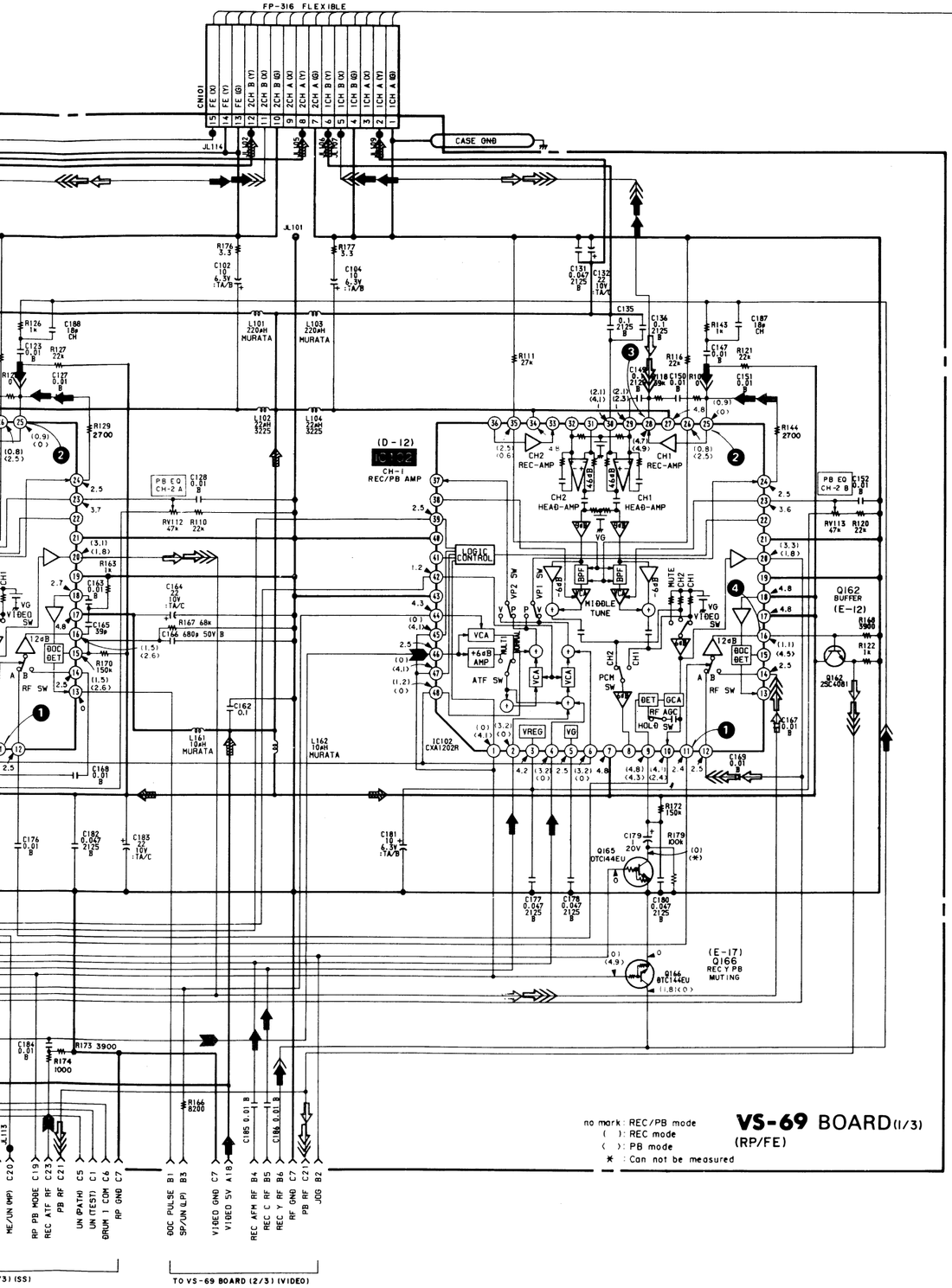
FP-316 FLEXIBLE
CNI01
CASE GND
JL101
JL114
L101 220uH MURATA
L102 220uH 3225
L103 220uH MURATA
L104 220uH 3225
L161 10uH MURATA
L162 10uH MURATA
(D-12)
IC102
CH-1 REC/PB AMP
CH2 REC-AMP
CH1 REC-AMP
CH2 HEAD-AMP
CH1 HEAD-AMP
LOGIC CONTROL
MIDDLE TUNE
ATF SW
PCM SW
RF SW
RF AGC
HOLD SW
VCA
VREG
VG
BPF
NOTE CH2
NOTE CH1
JC102 CXA1202R
Q162 BUFFER (E-12)
Q162 2SC4081
Q165 DTC144EU
Q164 BTC144EU
(E-17) Q166 REC/PB MUTING
PB EQ CH-2 A
PB EQ CH-2 B
RV112 47k
R110 22k
RV113 47k
R120 22k
R163 1k
R165 39k
R167 68k
R170 150k
R122 1k
R168 3900
R172 150k
R179 100k
R173 3900
R174 1000
R166 8200
C162 0.1
C164 22 10V :TA/C
C166 680p 50V B
C167 0.01 B
C168 0.01 B
C169 0.01 B
C176 0.01 B
C177 0.047 2125 B
C178 0.047 2125 B
C179 1 20V
C180 0.047 2125 B
C181 10 6.3V :TA/B
C182 0.047 2125 B
C183 22 10V :TA/C
C184 0.01 B
C185 0.01 B
C186 0.01 B
C187 18p CH
C188 18p CH
R126 1k
R127 22k
R129 2700
R144 2700
R111 27k
R114 22k
R121 22k
R143 1k
C123 0.01 B
C127 0.01 B
C128 0.01 B
C135 0.1 2125 B
C136 0.1 2125 B
C147 0.01 B
C150 0.01 B
C151 0.01 B
C131 0.047 2125 B
C132 22 10V :TA/C
R176 3.3
R177 3.3
C102 10 6.3V :TA/B
C104 10 6.3V :TA/B
R178 3.3
R118 68k
R119 68k
R100 0
R101 0
R102 0
R103 0
R104 0
R105 0
R106 0
R107 0
R108 0
R109 0
R123 0
R124 0
R125 0
R128 0
R130 0
R131 0
R132 0
R133 0
R134 0
R135 0
R136 0
R137 0
R138 0
R139 0
R140 0
R141 0
R142 0
R145 0
R146 0
R147 0
R148 0
R149 0
R150 0
R151 0
R152 0
R153 0
R154 0
R155 0
R156 0
R157 0
R158 0
R159 0
R160 0
R161 0
R162 0
R164 0
R169 0
R171 0
R175 0
R181 0
R182 0
R183 0
R184 0
R185 0
R186 0
R187 0
R188 0
R189 0
R190 0
R191 0
R192 0
R193 0
R194 0
R195 0
R196 0
R197 0
R198 0
R199 0
R200 0

VS-69 (HEAD AMP/VIDEO/SERVO/SYSTEM CONTROL), CB-32P (LINK), PIN JACK ASSEMBLY (TERMINAL) PRINTED WIRING BOARDS

— Ref. No. VS-69, CB-32P BOARDS: 2000 series —

- **For printed wiring boards.**
- VS-69, CB-32P boards are the printed wiring board which has four layers structure but inner two layers' patterns are omitted.
- PIN JACK Assembly is replaced as blocks, so that there PRINTED WIRING BOARDS are omitted.

VS-69 BOARD (COMPONENT SIDE)

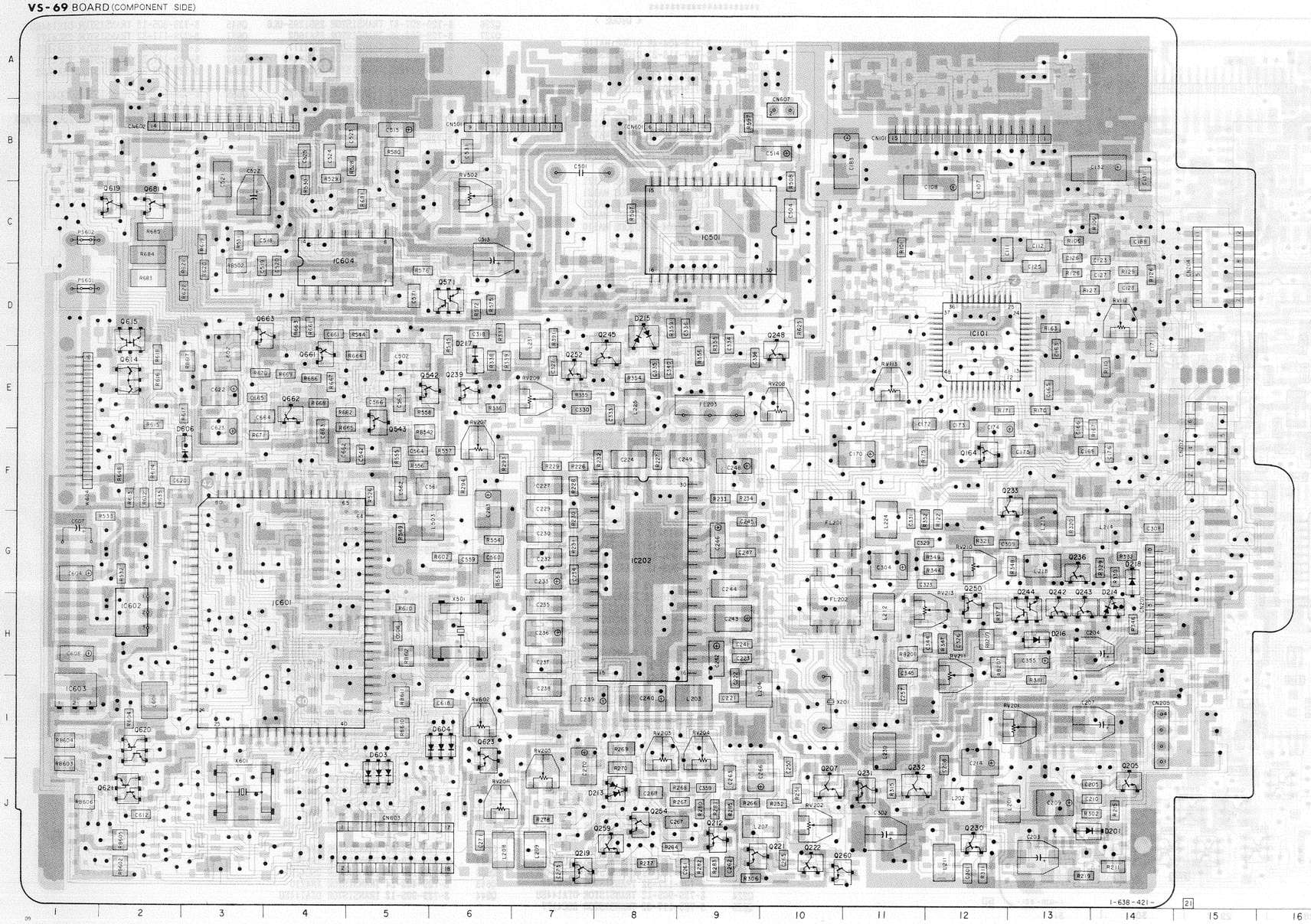

VS-69 BOARD (CONDUCTOR SIDE)

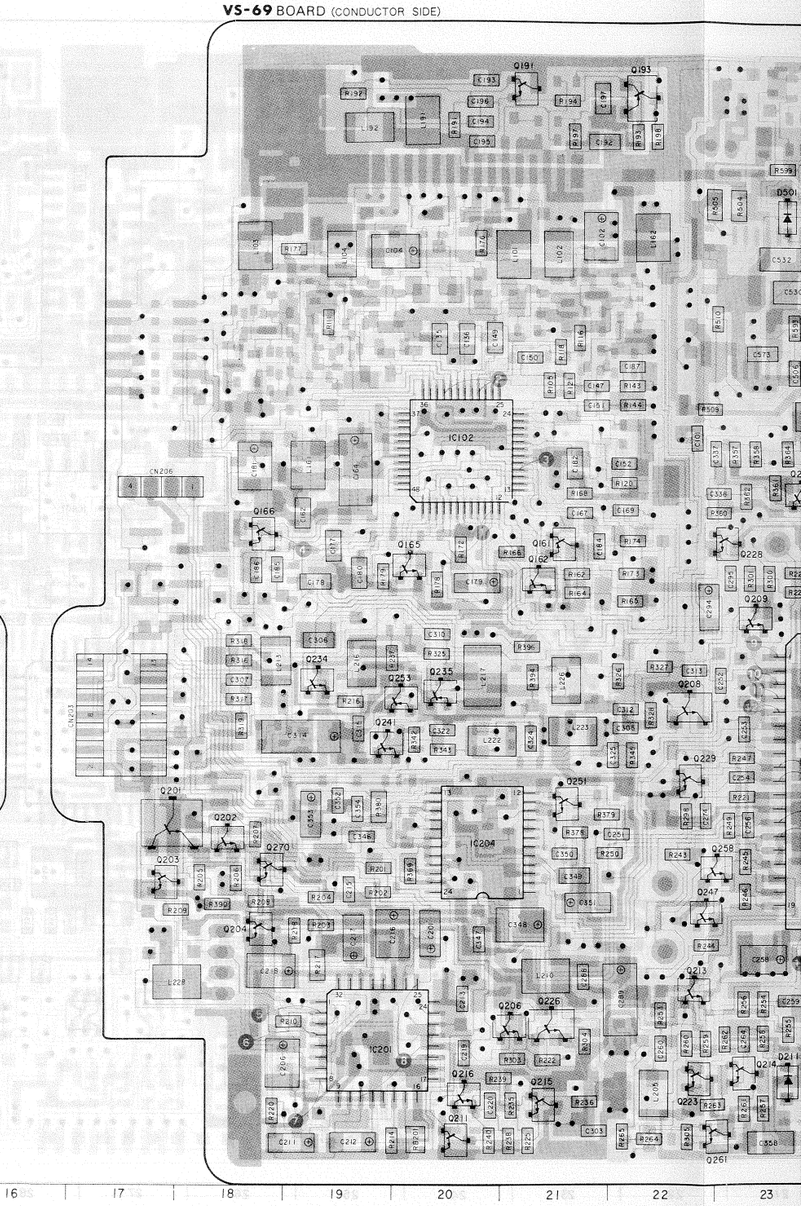

ed as blocks, so that there
omitted.

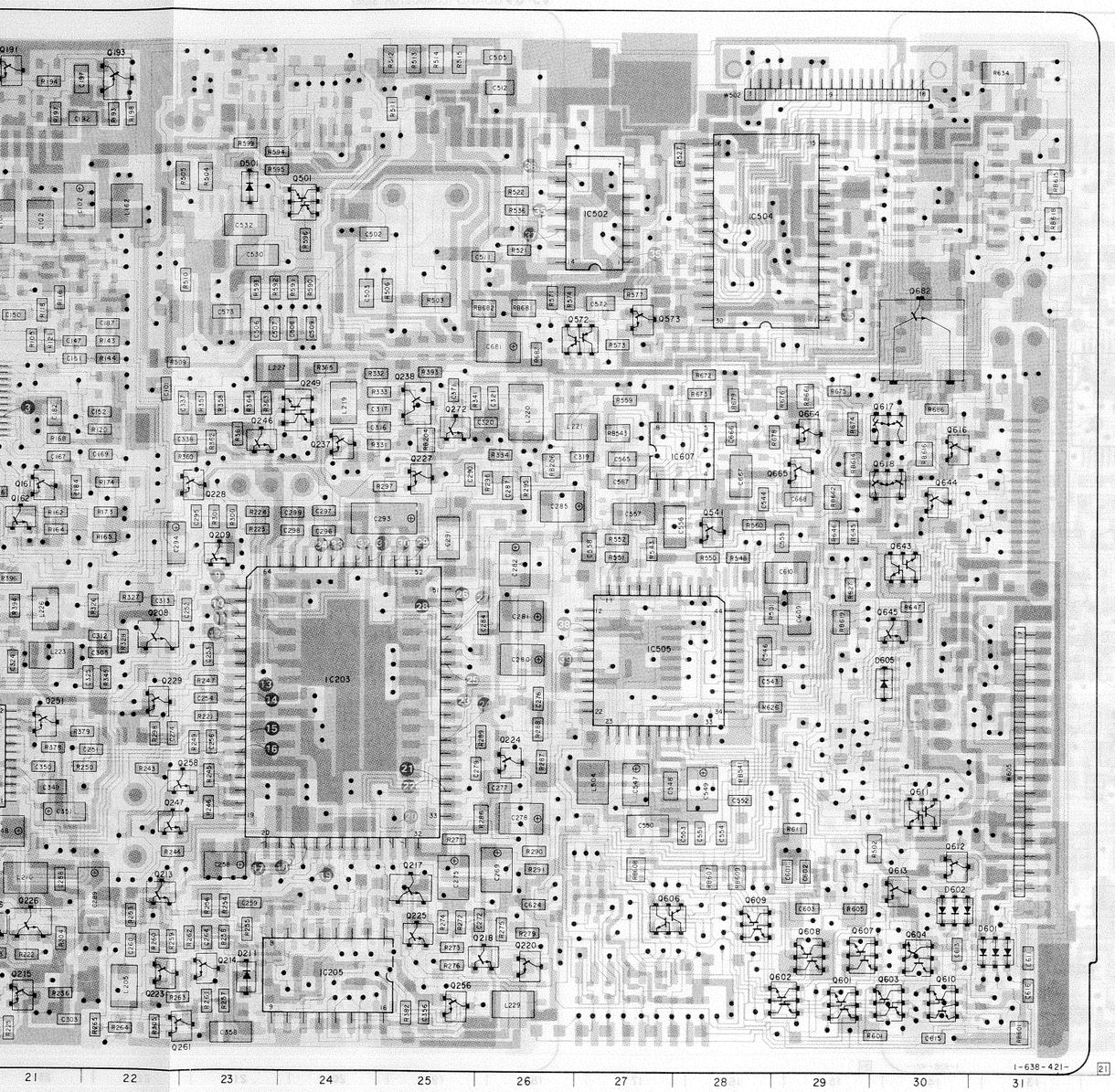

VS-69 BOARD, COMPLETE

****

< DIODE >

D201	8-719-404-46	DIODE MA110
D211	8-719-118-21	DIODE 1SS283
D213	8-719-404-35	DIODE MA141WK
D214	8-719-404-35	DIODE MA141WK
D215	8-719-800-76	DIODE 1SS226
D216	8-719-404-46	DIODE MA110
D217	8-719-404-46	DIODE MA110
D218	8-719-404-46	DIODE MA110
D501	8-719-404-46	DIODE MA110
D601	8-719-404-40	DIODE MA121
D602	8-719-404-40	DIODE MA121
D603	8-719-404-40	DIODE MA121
D604	8-719-404-40	DIODE MA121
D605	8-719-404-46	DIODE MA110
D606	8-719-404-46	DIODE MA110

< IC >

IC101	8-752-033-38	IC CXA1202R
IC102	8-752-033-38	IC CXA1202R
IC201	8-752-033-40	IC CXA1201Q
IC202	8-752-324-87	IC CXL1502M
IC203	8-752-034-40	IC CXA1200BQ
IC204	8-759-605-61	IC CXA1203N
IC205	8-759-009-22	IC MC14094BF
IC501	8-759-990-55	IC CXA8006M
IC502	8-759-148-05	IC CXA8010M
IC504	8-752-038-71	IC CXA1127AM
IC505	8-752-035-48	IC CXA1204Q
IC601	8-752-818-58	IC CXP80116-822Q
IC602	8-759-502-36	IC S-81350HG
IC603	8-759-987-66	IC TL7757
IC604	8-759-100-95	IC uPC324G2
IC607	8-759-100-93	IC uPC393G2

< TRANSISTOR >

Q161	8-729-905-12	TRANSISTOR DTA144EU
Q162	8-729-117-32	TRANSISTOR 2SC4177
Q164	8-729-905-18	TRANSISTOR DTC144EU
Q165	8-729-905-18	TRANSISTOR DTC144EU
Q166	8-729-905-18	TRANSISTOR DTC144EU
Q191	8-729-117-16	TRANSISTOR 2SA1611
Q193	8-729-216-22	TRANSISTOR 2SA1162
Q201	8-729-101-07	TRANSISTOR 2SB798-DL
Q202	8-729-602-36	TRANSISTOR 2SA1602
Q203	8-729-602-36	TRANSISTOR 2SA1602
Q204	8-729-905-18	TRANSISTOR DTC144EU
Q205	8-729-602-36	TRANSISTOR 2SA1602
Q206	8-729-907-00	TRANSISTOR DTC114EU
Q207	8-729-140-88	TRANSISTOR FP1A3M
Q208	8-729-102-07	TRANSISTOR 2SC2223-F13
Q209	8-729-905-18	TRANSISTOR DTC144EU
Q211	8-729-905-61	TRANSISTOR DTC124EU
Q212	8-729-602-36	TRANSISTOR 2SA1602
Q213	8-729-117-32	TRANSISTOR 2SC4177
Q214	8-729-117-32	TRANSISTOR 2SC4177
Q215	8-729-602-36	TRANSISTOR 2SA1602
Q216	8-729-117-32	TRANSISTOR 2SC4177
Q217	8-729-102-07	TRANSISTOR 2SC2223-F13
Q218	8-729-117-32	TRANSISTOR 2SC4177
Q219	8-729-602-36	TRANSISTOR 2SA1602
Q220	8-729-117-32	TRANSISTOR 2SC4177
Q221	8-729-905-12	TRANSISTOR DTA144EU
Q222	8-729-117-32	TRANSISTOR 2SC4177
Q224	8-729-905-12	TRANSISTOR DTA144EU
Q225	8-729-117-32	TRANSISTOR 2SC4177
Q226	8-729-807-87	TRANSISTOR 2SB1295-UL6
Q227	8-729-602-36	TRANSISTOR 2SA1602
Q228	8-729-117-32	TRANSISTOR 2SC4177
Q229	8-729-905-15	TRANSISTOR DTC144WU
Q230	8-729-117-32	TRANSISTOR 2SC4177
Q231	8-729-905-15	TRANSISTOR DTC144WU
Q232	8-729-140-88	TRANSISTOR FP1A3M
Q233	8-729-117-32	TRANSISTOR 2SC4177
Q234	8-729-117-32	TRANSISTOR 2SC4177
Q235	8-729-602-36	TRANSISTOR 2SA1602
Q236	8-729-117-16	TRANSISTOR 2SA1611
Q237	8-729-117-16	TRANSISTOR 2SA1611
Q238	8-729-102-07	TRANSISTOR 2SC2223-F13
Q239	8-729-117-32	TRANSISTOR 2SC4177
Q241	8-729-602-36	TRANSISTOR 2SA1602
Q242	8-729-905-18	TRANSISTOR DTC144EU
Q243	8-729-905-12	TRANSISTOR DTA144EU
Q244	8-729-420-12	TRANSISTOR XN4213
Q245	8-729-102-07	TRANSISTOR 2SC2223-F13
Q246	8-729-117-32	TRANSISTOR 2SC4177
Q247	8-729-117-32	TRANSISTOR 2SC4177
Q248	8-729-905-12	TRANSISTOR DTA144EU
Q249	8-729-420-12	TRANSISTOR XN4213
Q250	8-729-905-12	TRANSISTOR DTA144EU
Q251	8-729-905-18	TRANSISTOR DTC144EU
Q252	8-729-117-32	TRANSISTOR 2SC4177
Q253	8-729-117-32	TRANSISTOR 2SC4177
Q254	8-729-905-12	TRANSISTOR DTA144EU
Q256	8-729-905-18	TRANSISTOR DTC144EU
Q258	8-729-921-08	TRANSISTOR DTC144TU
Q259	8-729-921-58	TRANSISTOR DTA144TU
Q260	8-729-117-32	TRANSISTOR 2SC4177
Q261	8-729-602-36	TRANSISTOR 2SA1602
Q270	8-729-602-36	TRANSISTOR 2SA1602
Q272	8-729-602-36	TRANSISTOR 2SA1602
Q501	8-729-920-39	TRANSISTOR IMT1US
Q541	8-729-602-36	TRANSISTOR 2SA1602
Q542	8-729-117-32	TRANSISTOR 2SC4177
Q543	8-729-602-36	TRANSISTOR 2SA1602
Q571	8-729-920-39	TRANSISTOR IMT1US
Q572	8-729-920-39	TRANSISTOR IMT1US
Q573	8-729-117-32	TRANSISTOR 2SC4177
Q601	8-729-403-24	TRANSISTOR XN4210
Q602	8-729-403-24	TRANSISTOR XN4210
Q603	8-729-403-24	TRANSISTOR XN4210
Q604	8-729-403-24	TRANSISTOR XN4210
Q606	8-729-403-24	TRANSISTOR XN4210
Q607	8-729-403-24	TRANSISTOR XN4210
Q608	8-729-403-24	TRANSISTOR XN4210
Q609	8-729-403-24	TRANSISTOR XN4210
Q610	8-729-403-24	TRANSISTOR XN4210
Q611	8-729-420-12	TRANSISTOR XN4213
Q612	8-729-905-12	TRANSISTOR DTA144EU
Q613	8-729-905-18	TRANSISTOR DTC144EU
Q614	8-729-903-97	TRANSISTOR FMS1FE
Q615	8-729-903-82	TRANSISTOR FMW2
Q616	8-729-117-32	TRANSISTOR 2SC4177
Q617	8-729-903-10	TRANSISTOR FMW1
Q618	8-729-903-10	TRANSISTOR FMW1
Q619	8-729-907-00	TRANSISTOR DTC114EU
Q620	8-729-421-90	TRANSISTOR XN4113
Q621	8-729-420-12	TRANSISTOR XN4213
Q623	8-729-117-32	TRANSISTOR 2SC4177
Q643	8-729-403-24	TRANSISTOR XN4210
Q644	8-729-905-12	TRANSISTOR DTA144EU
Q645	8-729-905-18	TRANSISTOR DTC144EU
Q661	8-729-117-32	TRANSISTOR 2SC4177
Q662	8-729-602-36	TRANSISTOR 2SA1602
Q663	8-729-117-32	TRANSISTOR 2SC4177
Q664	8-729-602-36	TRANSISTOR 2SA1602
Q665	8-729-117-32	TRANSISTOR 2SC4177
Q681	8-729-117-32	TRANSISTOR 2SC4177
Q682	8-729-820-46	TRANSISTOR 2SB1202FAST

CB-32 BOARD (COMPONENT SIDE)

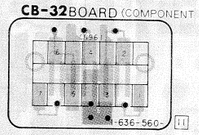

CB-32 BOARD (COMPONENT SIDE)

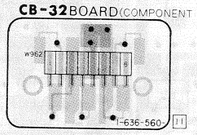

VS-69 (HEAD AMP/VIDEO/SERVO/SYSTEM CONTROL), CB-32P (LINK), PIN JACK ASSEMBLY (TERMINAL) PRINTED WIRING BOARDS

— Ref. No. VS-69, CB-32P BOARDS: 2000 series —

- **For printed wiring boards.**
- VS-69, CB-32P boards are the printed wiring board which has four layers structure but inner two layers' patterns are omitted.
- PIN JACK Assembly is replaced as blocks, so that there PRINTED WIRING BOARDS are omitted.

VS-69 BOARD (COMPONENT SIDE)

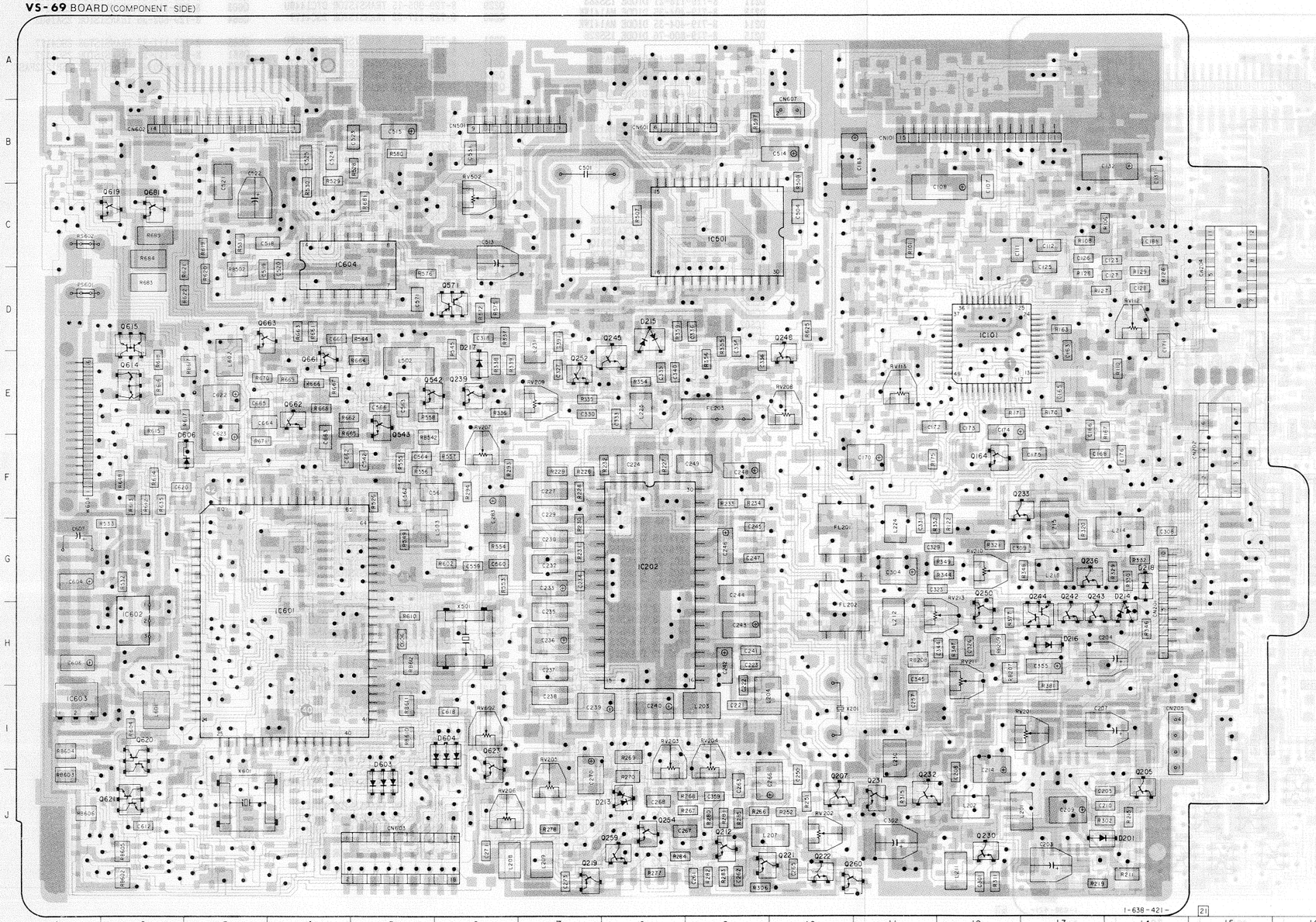

VS-69 BOARD (CONDUCTOR SIDE)

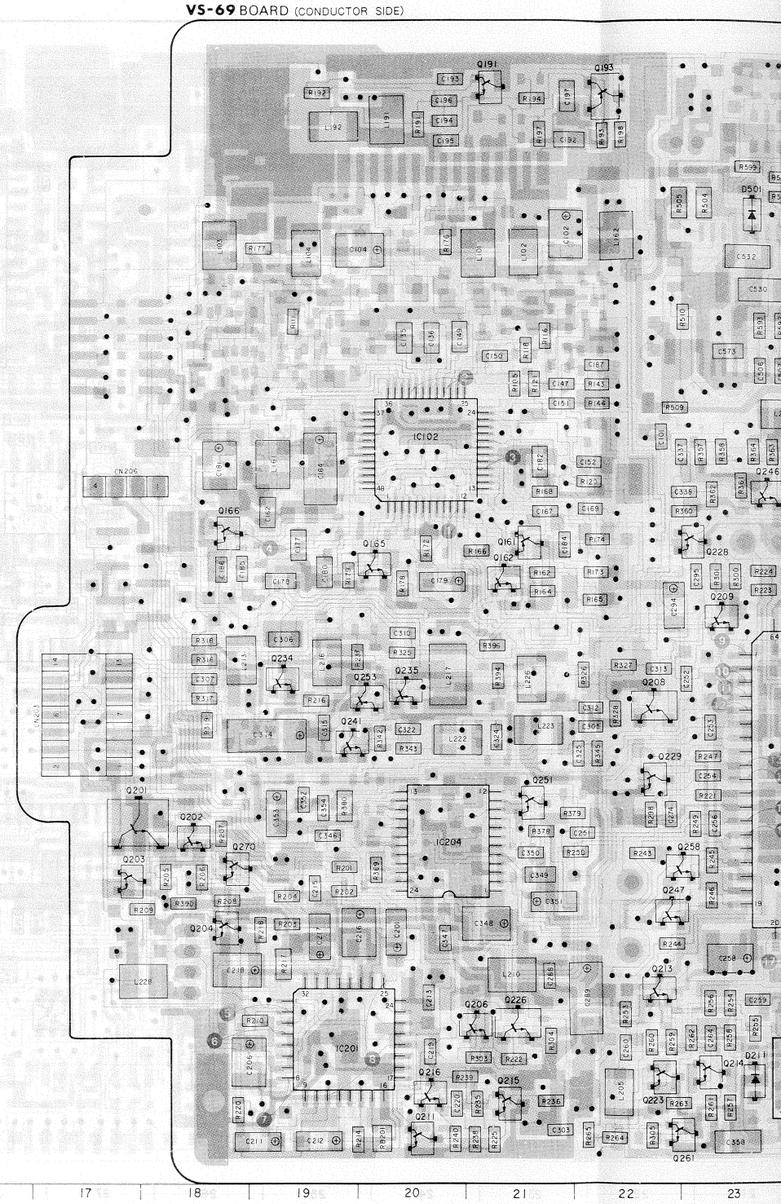

s blocks, so that there
ed.

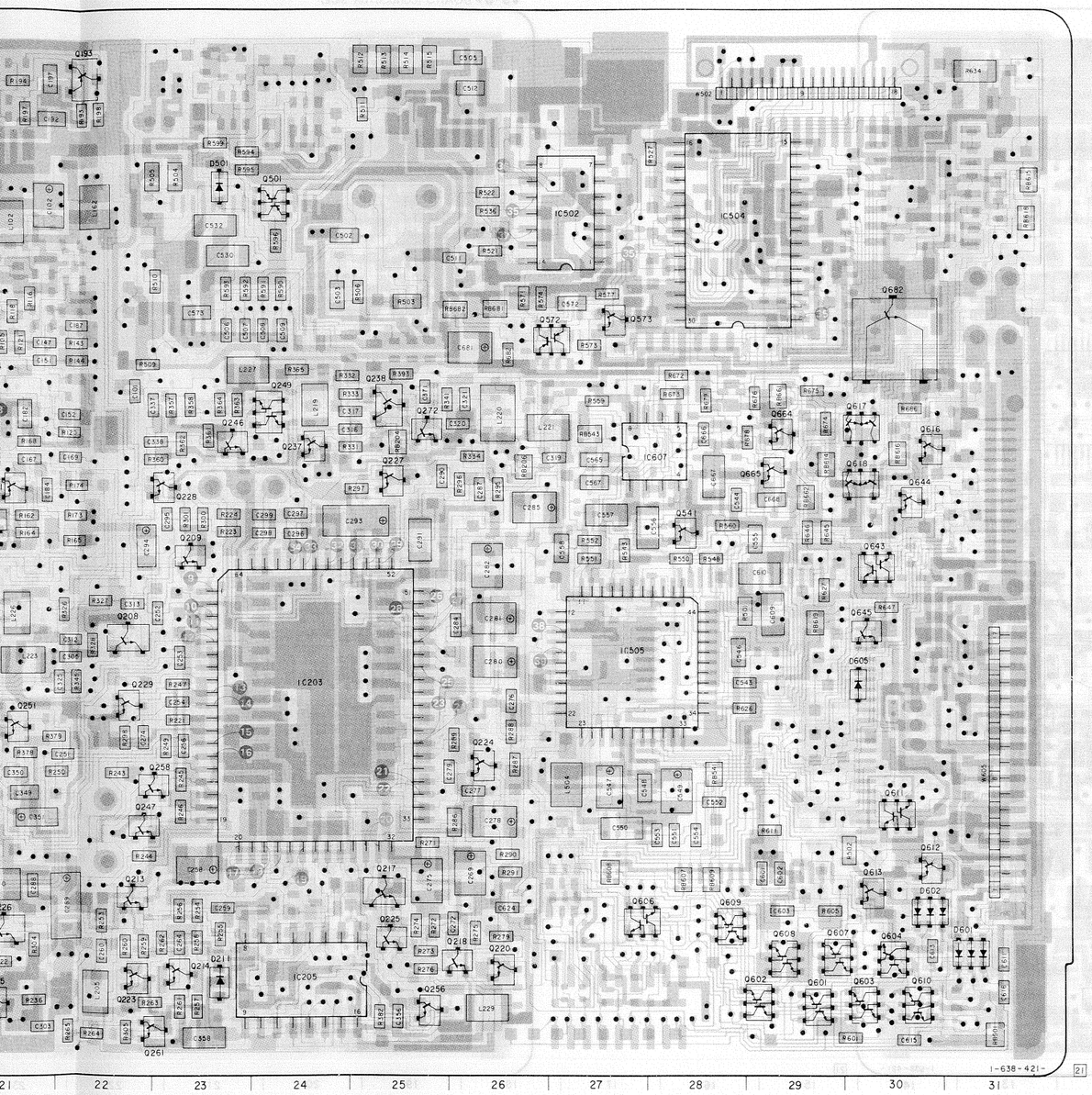

CB-32 BOARD (COMPONENT SIDE)

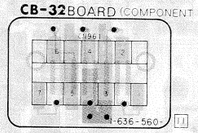

CB-32 BOARD (COMPONENT SIDE)

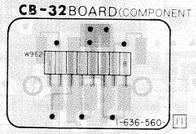

VS-69 BOARD, COMPLETE

< DIODE >

D201	8-719-404-46	DIODE MA110
D211	8-719-116-21	DIODE 1SS283
D213	8-719-404-35	DIODE MA141WK
D214	8-719-404-35	DIODE MA141WK
D215	8-719-800-76	DIODE 1SS226
D216	8-719-404-46	DIODE MA110
D217	8-719-404-46	DIODE MA110
D218	8-719-404-46	DIODE MA110
D501	8-719-404-46	DIODE MA110
D601	8-719-404-40	DIODE MA121
D602	8-719-404-40	DIODE MA121
D603	8-719-404-40	DIODE MA121
D604	8-719-404-40	DIODE MA121
D605	8-719-404-46	DIODE MA110
D606	8-719-404-46	DIODE MA110

< IC >

IC101	8-752-033-38	IC CXA1202R
IC102	8-752-033-38	IC CXA1202R
IC201	8-752-033-40	IC CXA1201Q
IC202	8-752-324-87	IC CXL1502M
IC203	8-752-034-40	IC CXA1200BQ
IC204	8-759-605-61	IC CXA1203N
IC205	8-759-009-22	IC MC14094BF
IC501	8-759-990-55	IC CXA8006M
IC502	8-759-148-05	IC CXA8010M
IC504	8-752-038-71	IC CXA1127AM
IC505	8-752-035-48	IC CXA1204Q
IC601	8-752-818-58	IC CXP80116-822Q
IC602	8-759-502-36	IC S-81350HG
IC603	8-759-987-66	IC TL7757
IC604	8-759-100-95	IC uPC324G2
IC607	8-759-100-93	IC uPC393G2

< TRANSISTOR >

Q161	8-729-905-12	TRANSISTOR DTA144EU
Q162	8-729-117-32	TRANSISTOR 2SC4177
Q164	8-729-905-18	TRANSISTOR DTC144EU
Q165	8-729-905-18	TRANSISTOR DTC144EU
Q166	8-729-905-18	TRANSISTOR DTC144EU
Q191	8-729-117-16	TRANSISTOR 2SA1611
Q193	8-729-216-22	TRANSISTOR 2SA1162
Q201	8-729-101-07	TRANSISTOR 2SB798-DL
Q202	8-729-602-36	TRANSISTOR 2SA1602
Q203	8-729-602-36	TRANSISTOR 2SA1602
Q204	8-729-905-18	TRANSISTOR DTC144EU
Q205	8-729-602-36	TRANSISTOR 2SA1602
Q206	8-729-907-00	TRANSISTOR DTC114EU
Q207	8-729-140-88	TRANSISTOR FP1A3M
Q208	8-729-102-07	TRANSISTOR 2SC2223-F13
Q209	8-729-905-18	TRANSISTOR DTC144EU
Q211	8-729-905-61	TRANSISTOR DTC124EU
Q212	8-729-602-36	TRANSISTOR 2SA1602
Q213	8-729-117-32	TRANSISTOR 2SC4177
Q214	8-729-117-32	TRANSISTOR 2SC4177
Q215	8-729-602-36	TRANSISTOR 2SA1602
Q216	8-729-117-32	TRANSISTOR 2SC4177
Q217	8-729-102-07	TRANSISTOR 2SC2223-F13
Q218	8-729-117-32	TRANSISTOR 2SC4177
Q219	8-729-602-36	TRANSISTOR 2SA1602
Q220	8-729-117-32	TRANSISTOR 2SC4177
Q221	8-729-905-12	TRANSISTOR DTA144EU
Q222	8-729-117-32	TRANSISTOR 2SC4177
Q224	8-729-905-12	TRANSISTOR DTA144EU
Q225	8-729-117-32	TRANSISTOR 2SC4177
Q226	8-729-807-87	TRANSISTOR 2SB1295-UL6
Q227	8-729-602-36	TRANSISTOR 2SA1602
Q228	8-729-117-32	TRANSISTOR 2SC4177
Q229	8-729-905-15	TRANSISTOR DTC144WU
Q230	8-729-117-32	TRANSISTOR 2SC4177
Q231	8-729-905-15	TRANSISTOR DTC144WU
Q232	8-729-140-88	TRANSISTOR FP1A3M
Q233	8-729-117-32	TRANSISTOR 2SC4177
Q234	8-729-117-32	TRANSISTOR 2SC4177
Q235	8-729-602-36	TRANSISTOR 2SA1602
Q236	8-729-117-16	TRANSISTOR 2SA1611
Q237	8-729-117-16	TRANSISTOR 2SA1611
Q238	8-729-102-07	TRANSISTOR 2SC2223-F13
Q239	8-729-117-32	TRANSISTOR 2SC4177
Q241	8-729-602-36	TRANSISTOR 2SA1602
Q242	8-729-905-18	TRANSISTOR DTC144EU
Q243	8-729-905-12	TRANSISTOR DTA144EU
Q244	8-729-420-12	TRANSISTOR XN4213
Q245	8-729-102-07	TRANSISTOR 2SC2223-F13
Q246	8-729-117-32	TRANSISTOR 2SC4177
Q247	8-729-117-32	TRANSISTOR 2SC4177
Q248	8-729-905-12	TRANSISTOR DTA144EU
Q249	8-729-420-12	TRANSISTOR XN4213
Q250	8-729-905-12	TRANSISTOR DTA144EU
Q251	8-729-905-18	TRANSISTOR DTC144EU
Q252	8-729-117-32	TRANSISTOR 2SC4177
Q253	8-729-117-32	TRANSISTOR 2SC4177
Q254	8-729-905-12	TRANSISTOR DTA144EU
Q256	8-729-905-18	TRANSISTOR DTC144EU
Q258	8-729-921-08	TRANSISTOR DTC144TU
Q259	8-729-921-58	TRANSISTOR DTA144TU
Q260	8-729-117-32	TRANSISTOR 2SC4177
Q261	8-729-602-36	TRANSISTOR 2SA1602
Q270	8-729-602-36	TRANSISTOR 2SA1602
Q272	8-729-602-36	TRANSISTOR 2SA1602
Q501	8-729-920-39	TRANSISTOR IMT1US
Q541	8-729-602-36	TRANSISTOR 2SA1602
Q542	8-729-117-32	TRANSISTOR 2SC4177
Q543	8-729-602-36	TRANSISTOR 2SA1602
Q571	8-729-920-39	TRANSISTOR IMT1US
Q572	8-729-920-39	TRANSISTOR IMT1US
Q573	8-729-117-32	TRANSISTOR 2SC4177
Q601	8-729-403-24	TRANSISTOR XN4210
Q602	8-729-403-24	TRANSISTOR XN4210
Q603	8-729-403-24	TRANSISTOR XN4210
Q604	8-729-403-24	TRANSISTOR XN4210
Q606	8-729-403-24	TRANSISTOR XN4210
Q607	8-729-403-24	TRANSISTOR XN4210
Q608	8-729-403-24	TRANSISTOR XN4210
Q609	8-729-403-24	TRANSISTOR XN4210
Q610	8-729-403-24	TRANSISTOR XN4210
Q611	8-729-420-12	TRANSISTOR XN4213
Q612	8-729-905-12	TRANSISTOR DTA144EU
Q613	8-729-905-18	TRANSISTOR DTC144EU
Q614	8-729-903-97	TRANSISTOR FMS1FE
Q615	8-729-903-82	TRANSISTOR FMW2
Q616	8-729-117-32	TRANSISTOR 2SC4177
Q617	8-729-903-10	TRANSISTOR FMW1
Q618	8-729-903-10	TRANSISTOR FMW1
Q619	8-729-907-00	TRANSISTOR DTC114EU
Q620	8-729-421-90	TRANSISTOR XN4113
Q621	8-729-420-12	TRANSISTOR XN4213
Q623	8-729-117-32	TRANSISTOR 2SC4177
Q643	8-729-403-24	TRANSISTOR XN4210
Q644	8-729-905-12	TRANSISTOR DTA144EU
Q645	8-729-905-18	TRANSISTOR DTC144EU
Q661	8-729-117-32	TRANSISTOR 2SC4177
Q662	8-729-602-36	TRANSISTOR 2SA1602
Q663	8-729-117-32	TRANSISTOR 2SC4177
Q664	8-729-602-36	TRANSISTOR 2SA1602
Q665	8-729-117-32	TRANSISTOR 2SC4177
Q681	8-729-117-32	TRANSISTOR 2SC4177
Q682	8-729-820-46	TRANSISTOR 2SB1202FAST

IC204 CXA1203N

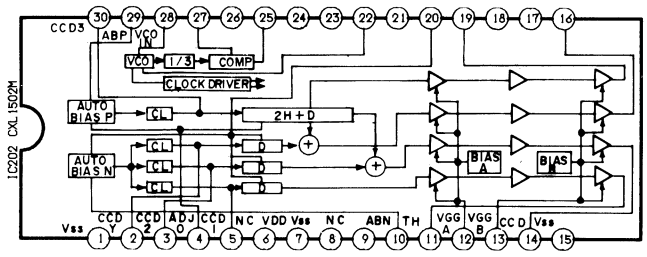

IC202 CXL1502M

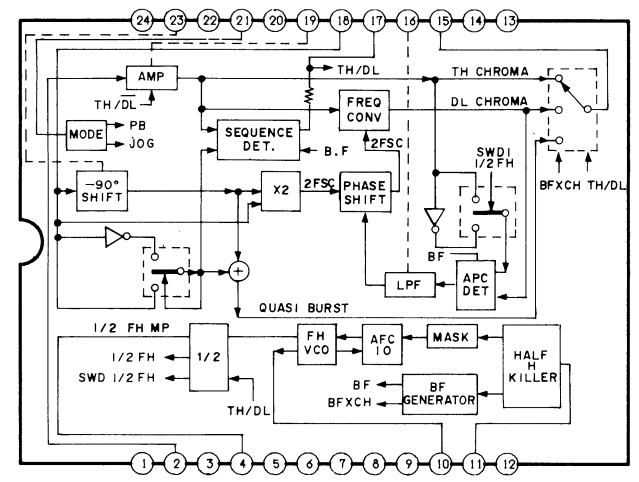

IC502 CXA8006M

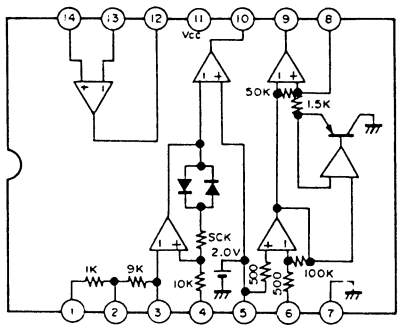

VS-69 BOARD

IC101	D-12	Q259	J-8
IC102	D-20	Q260	J-10
IC201	J-19	Q261	J-23
IC202	G-8	Q270	H-18
IC203	G-24	Q272	E-25
IC204	H-20	Q501	B-24
IC205	J-24	Q541	F-28
IC501	C-9	Q542	E-5
IC502	C-27	Q543	E-5
IC504	C-28	Q571	D-6
IC505	G-27	Q572	D-27
IC601	G-4	Q573	D-27
IC602	H-2	Q601	J-29
IC603	I-1	Q602	J-29
IC604	C-4	Q603	J-30
IC607	E-28	Q604	J-30
		Q606	J-27
D201	J-13	Q607	J-29
D211	J-23	Q608	J-29
D213	J-8	Q609	J-28
D214	H-14	Q610	J-30
D215	D-8	Q611	I-30
D216	H-13	Q612	I-30
D217	E-6	Q613	I-30
D218	G-14	Q614	E-2
D501	B-23	Q615	D-2
D601	J-31	Q616	E-30
D602	J-30	Q617	E-30
D603	J-5	Q618	E-30
D604	I-6	Q619	C-2
D605	H-30	Q620	I-2
D606	F-3	Q623	I-6
		Q643	F-30
Q161	E-21	Q644	E-30
Q162	F-21	Q645	G-30
Q164	F-12	Q661	E-4
Q165	F-20	Q662	E-4
Q166	E-18	Q663	D-3
Q191	A-21	Q664	E-29
Q193	A-22	Q665	E-29
Q201	H-17	Q681	C-2
Q202	H-18	Q682	D-30
Q203	H-17		
Q204	I-18		
Q205	J-14		
Q206	J-21		
Q207	J-10		
Q208	G-22		
Q209	F-23		
Q211	J-20		
Q212	J-9		
Q213	I-22		
Q214	J-23		
Q215	J-21		
Q216	J-20		
Q217	I-25		
Q218	J-26		
Q219	J-7		
Q220	J-26		
Q221	J-9		
Q222	J-10		
Q223	J-22		
Q224	H-26		
Q224	I-26		
Q225	J-25		
Q226	J-21		
Q227	E-25		
Q228	E-23		
Q229	H-22		
Q230	J-12		
Q231	J-11		
Q232	J-11		
Q233	F-13		
Q234	G-19		
Q235	G-20		
Q236	G-13		
Q237	E-24		
Q238	D-25		
Q239	E-6		
Q241	G-19		
Q242	H-13		
Q243	H-13		
Q244	H-13		
Q245	E-8		
Q246	E-23		
Q247	I-22		
Q248	E-10		
Q249	E-24		
Q250	H-12		
Q251	H-21		
Q252	E-7		
Q253	G-20		
Q254	J-8		
Q256	J-25		
Q258	H-23		

VS-69 BOARD (2/3)

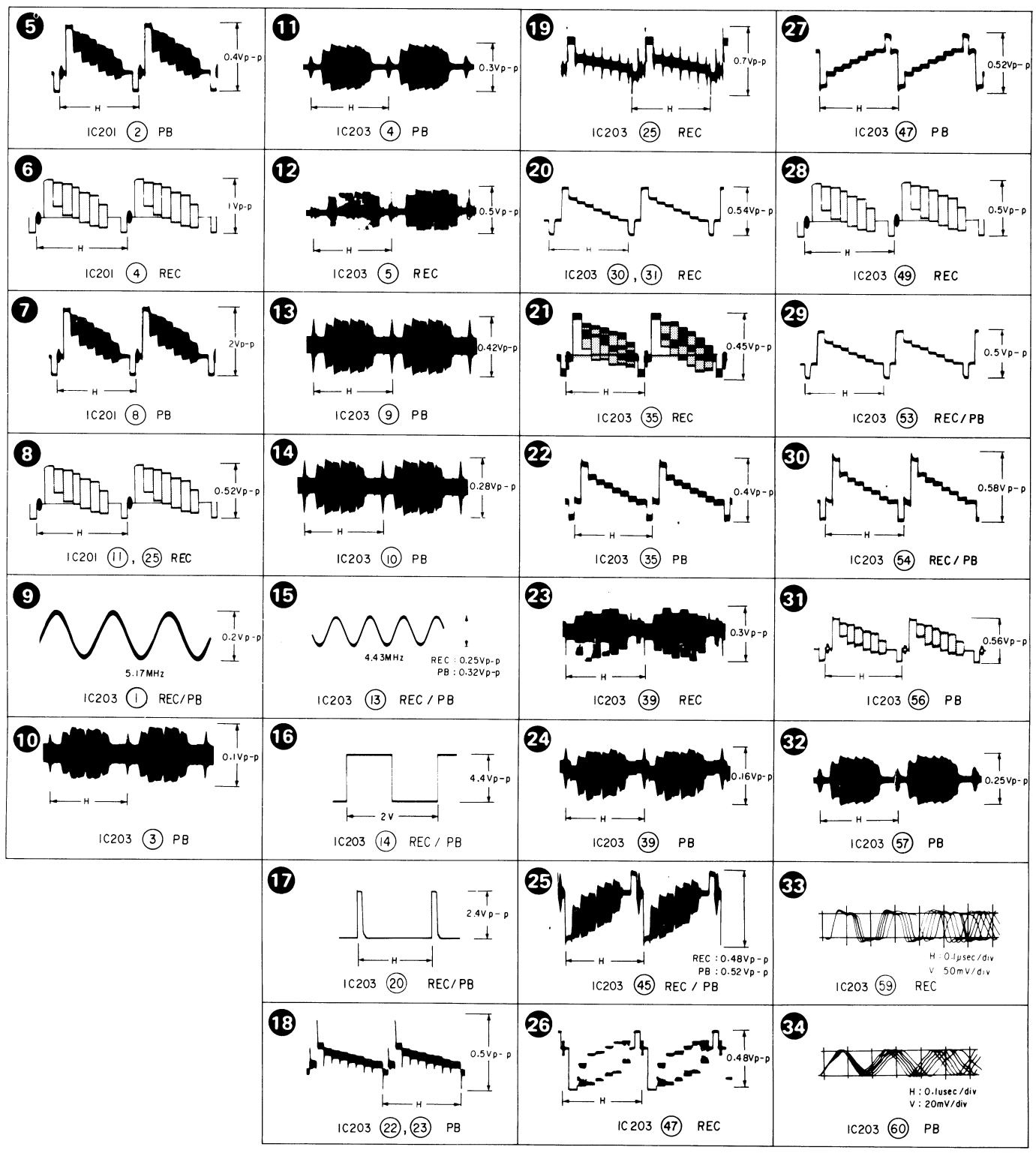

1 2

A B C D E F G H I J K L M N O P

— Ref. No. VS-69, CB-32P BOAR

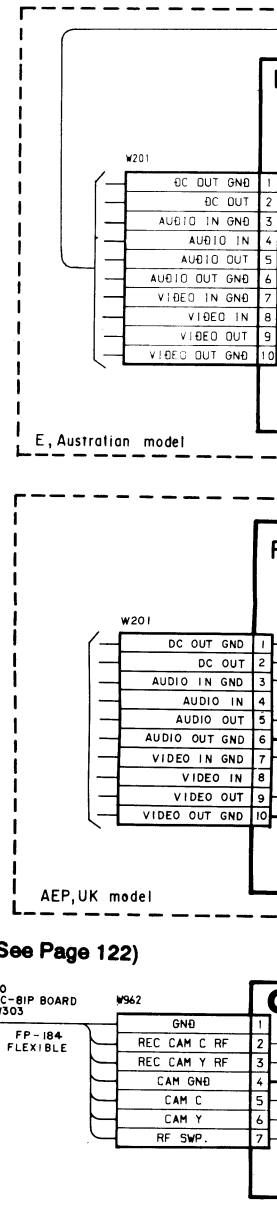

(See Page 122)

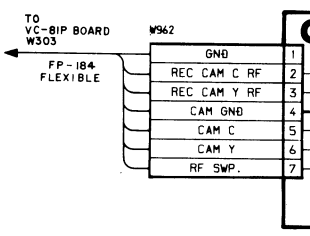

• **SIGNAL PATH**

	VIDEO	
	CHROMA	Y
REC	➡	➡
PB	⇨	⇨

Drum speed servo
Drum phase servo
Drum servo (speed and pha
Capstan speed servo
Capstan phase servo
Capstan servo (speed and
Ref. signal

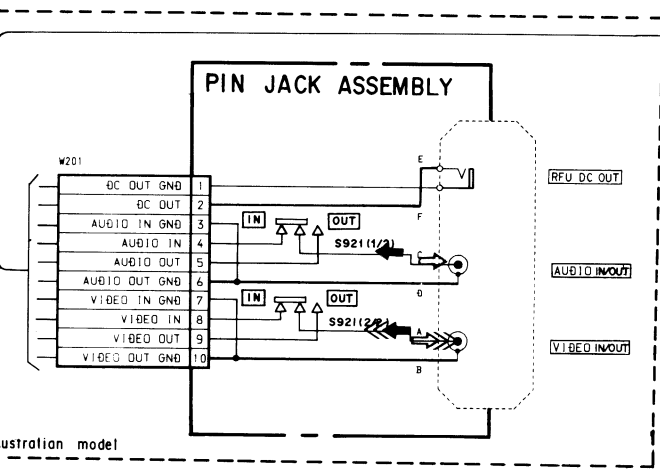

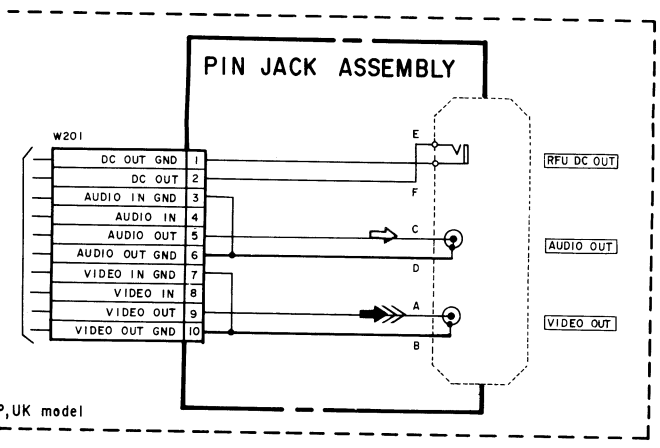

ge 122)

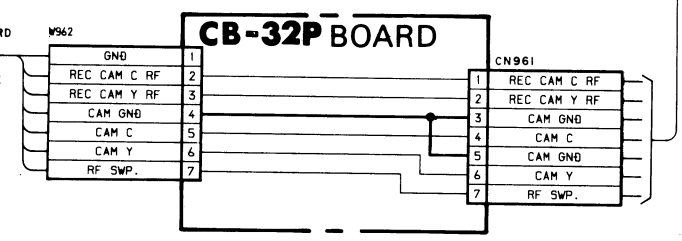

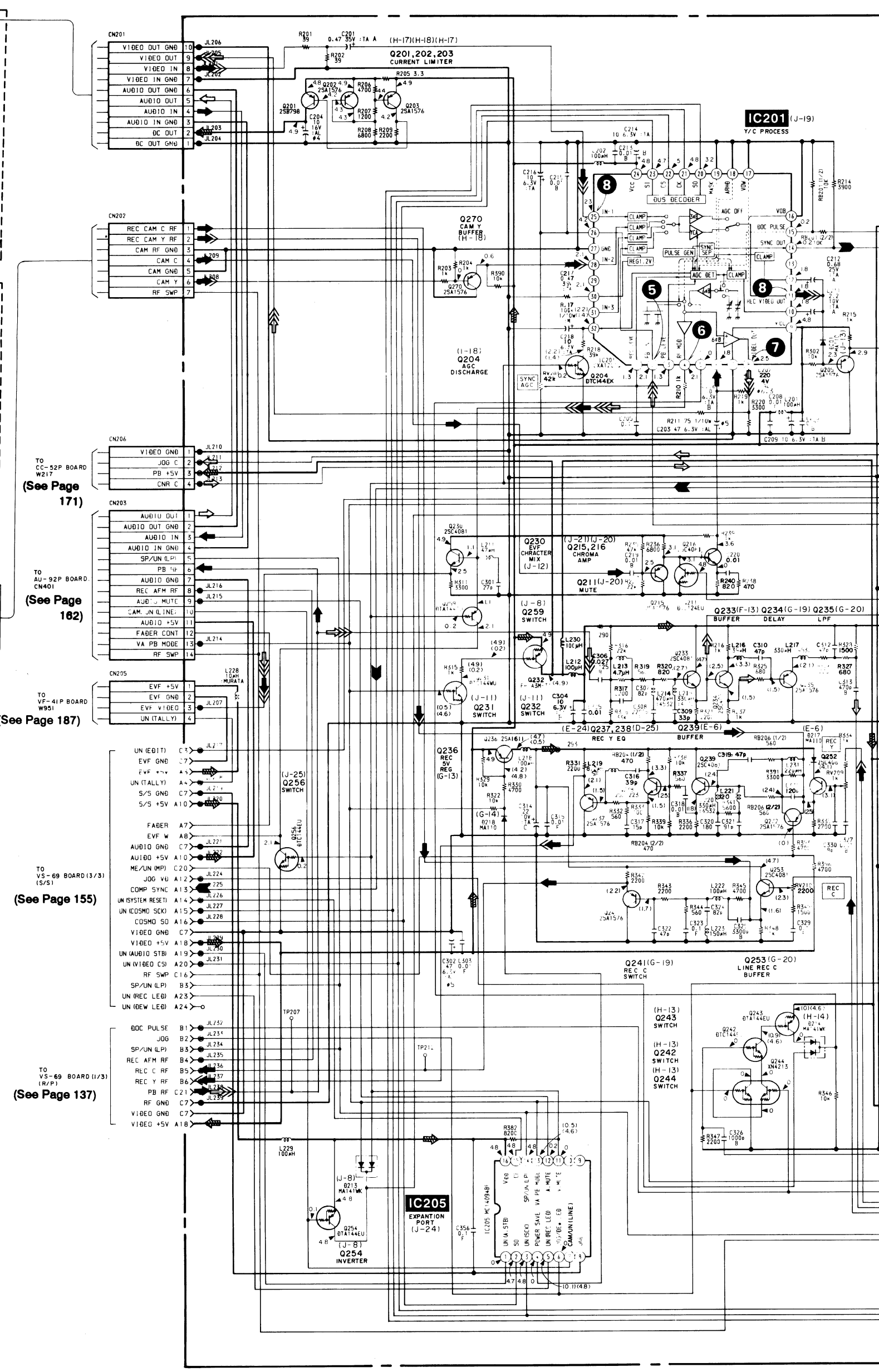

NAL PATH

	VIDEO SIGNAL			AUDIO SIGNAL
	CHROMA	Y	Y/CHROMA/DATA	
	➡	➡	➡	
	⇨	⇨	⇨	

	REC	REC/PB	PB
speed servo			
phase servo			
servo (speed and phase)			
tan speed servo			
tan phase servo			
tan servo (speed and phase)			
signal	➡		

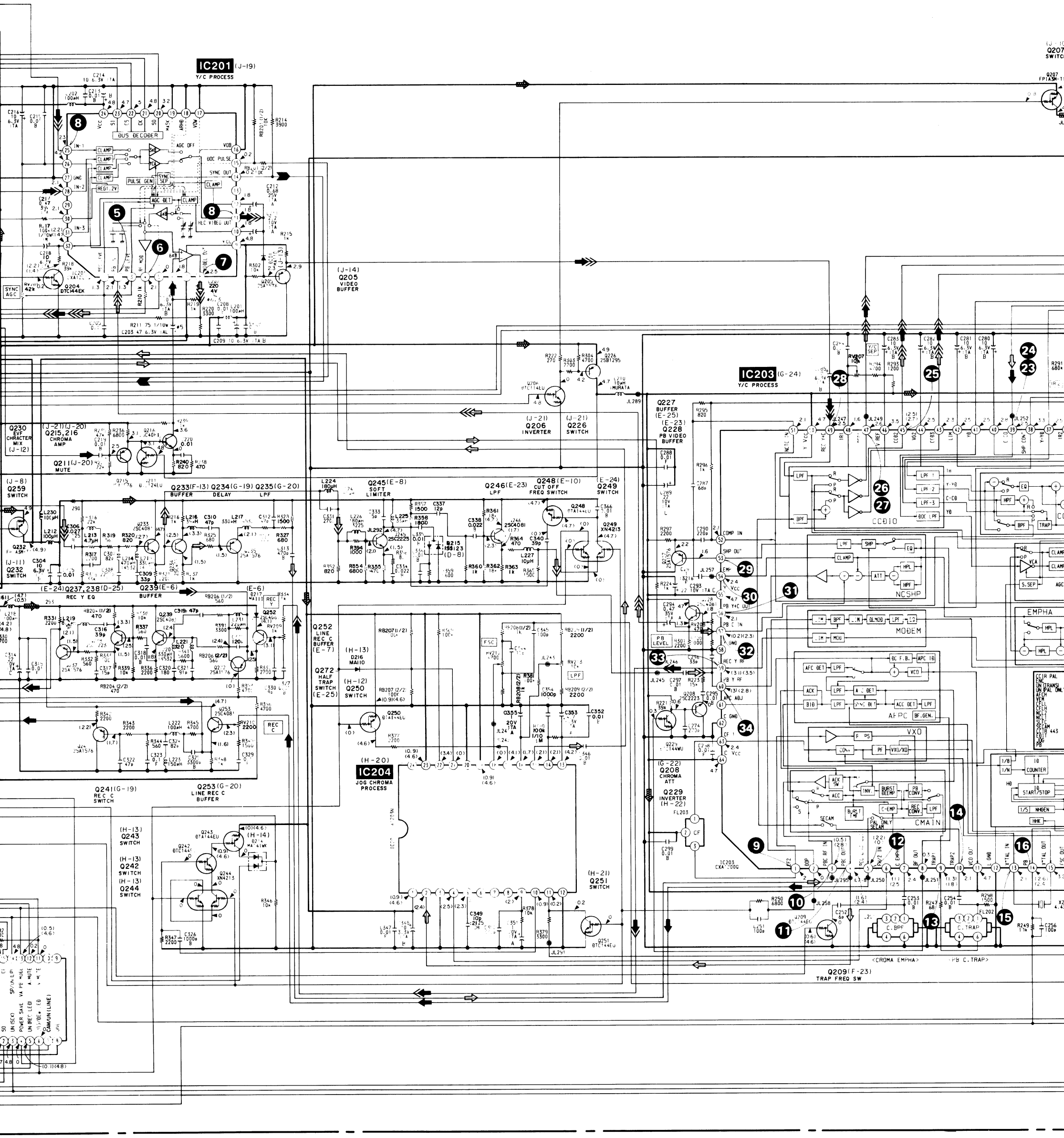
IC201 (J-19)
Y/C PROCESS
BUS DECODER
AGC OFF
PULSE GEN
SYNC SEP
AGC DET
CLAMP
REG 1.2V
REC VIDEO OUT
VIDEO OUT
SYNC OUT
BDC PULSE
VOB
Q204 DTC144EK
SYNC AGC
(J-14) Q205 VIDEO BUFFER
(J-21) Q206 INVERTER
(J-21) Q226 SWITCH
Q227 BUFFER (E-25)
Q228 PB VIDEO BUFFER
IC203 (G-24)
Y/C PROCESS
Q230 EVF CHARACTER MIX (J-12)
(J-21)(J-20) Q215,216 CHROMA AMP
Q211 (J-20) MUTE
(J-8) Q259 SWITCH
(J-11) Q232 SWITCH
Q233(F-13) Q234(G-19) Q235(G-20)
BUFFER DELAY LPF
Q245(E-8) SOFT LIMITER
Q246(E-23) LPF
Q248(E-10) CUT OFF FREQ SWITCH
(E-24) Q249 SWITCH
(E-24) Q237,238(D-25) Q239(E-6)
REC Y EQ BUFFER
Q252 LINE REC C BUFFER (E-7)
Q272 HALF TRAP SWITCH (E-25)
(H-13) D216 MA110
(H-12) Q250 SWITCH
Q250 DTA144EU
(H-20) IC204
JOG CHROMA PROCESS
Q241(G-19) REC C SWITCH
Q253(G-20) LINE REC C BUFFER
(H-13) Q243 SWITCH
(H-13) Q242 SWITCH
(H-13) Q244 SWITCH
(H-14) MA141WK
Q242 DTC144E
Q243 DTA144EU
Q244 XN4213
(H-21) Q251 SWITCH
Q251 DTC144EU
Q209(F-23) TRAP FREQ SW
<CROMA EMPHA>
<PB C.TRAP>
CCD10
NCSHP
MODEM
AFPC
VXO
CMAIN
EMPHA
C.BPF
C.TRAP
Q207 SWITCH
FP1A3M-T1

15 16 17 18 19 20 21 22 23 24 25

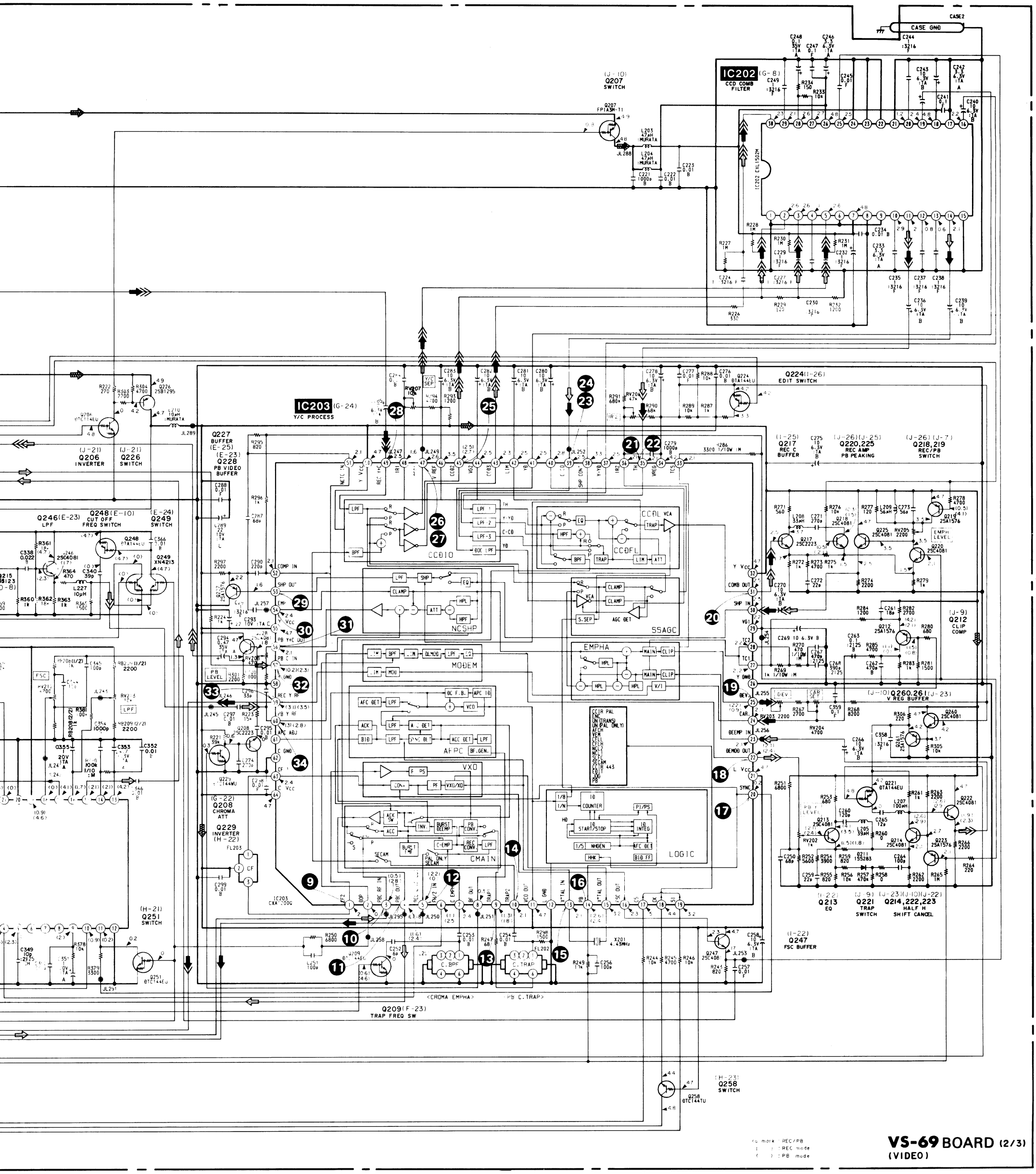
IC202 (G-8)
CCD COMB FILTER
IC202 CXL1502M
Q207 SWITCH
Q207 FPIA5M-T1
L203 47μH :MURATA
L204 47μH :MURATA
JL288
C221 1000p B
C222 0.01 B
C223 0.01 B
CASE2
CASE GND
C244 :3216 F
C248 0.1 35V :TA A
C247 0.1 F
C246 3.3 6.3V :TA A
C245 0.01 F
C243 10 6.3V :TA B
C242 3.3 6.3V :TA A
C241 0.1 F
C240 10 6.3V :TA B
R234 150
R233 10k
R228 1M
R230 1M
R231 1M
R227 1M
C229 :3216 F
C232 :3216 F
C234 0.01 B
C233 3.3 6.3V :TA A
C235 :3216 F
C237 :3216 F
C238 :3216 F
C236 10 6.3V :TA B
C239 10 6.3V :TA B
R226 330
R229 120
C230 :3216 F
R232 1200
C224 :3216 F
C227 :3216 F
IC203 (G-24)
Y/C PROCESS
RV207 10k
RV206 47k
R291 680k
R290 68k
R289 10k
R287 1k
R288 10k
Q224 DTA144EU
Q224 (I-26) EDIT SWITCH
Q222 25B1295
Q220A DTC114EU
L210 10μH :MURATA
JL289
Q206 INVERTER
Q226 SWITCH
Q227 BUFFER
Q228 PB VIDEO BUFFER
R295 820
R296 1k
R297 2200
C287 68p
C288 0.01 F
C289 22 10V :TA
C290 2200p
C293 10V :TA C
C294 0.47 35V :TA A
RV208 47k
R301 2200
R224 1k
C296 33p
C297 0.01 B
R223 15k
Q208 2SC2223
R221 39k
C295 0.01 B
C274 270p
Q229 DTA144WU
C298 0.01 F
Q208 CHROMA ATT
Q229 INVERTER (H-22)
FL203
C299 0.01 B
IC203 CXA1200Q
JL247
JL249
JL252
+286 3300 1/10W :M
Q217 REC C BUFFER
C275 10 6.3V B
Q220,225 REC AMP PB PEAKING
Q218,219 REC/PB SWITCH
LPF
BPF
CCDIO
CCDFL
CCAL VCA
TRAP
LIM
ATT
NCSHP
SSAGC
AGC DET
EMPHA
MAIN
CLIP
MODEM
AFPC
AFC DET
ACK DET
BF.GEN.
VXO
CMAIN
LOGIC
10 COUNTER
10 START/STOP
10 INTEG
HD
SECAM
PAL ONLY SECAM
BURST DEEMP
C-EMP
REC CONV.
PB CONV.
INV.
CCIR PAL
ENG
UN (TRANS)
UN PAL ONLY
ACCH
VEM
CFLL
CFLH
NCL2
NCL1
SEC
SECAM
CCIR 443
EDIT
VKG
PB
Q246 (E-23) LPF
Q248 (E-10) CUT OFF FREQ SWITCH
Q249 SWITCH
Q248 DTA144EU
Q249 XN4213
2SC4081
R361 4.7k
C338 0.022 B
R364 470
C340 39p
L227 10μH
R360 1M
R362 18k
R363 1k
R365 150Ω
C366 0.01 B
FSC
RV211 4.7k
C354 1000p
C355 1 20V :TA A
C353 4.7 6.3V :TA A
C352 0.01 F
JL245
JL246
JL247
RB208 (1/2) 1k
RB209 (1/2) 2200
RB210 (1/2) 1k
C345 100p
C346 100p
R381 100
JL244
JL291
R578 10k
R379 3300
C349 10p
Q251 DTC144EU
Q251 (H-21) SWITCH
Q209 (F-23) TRAP FREQ SW
<CROMA EMPHA>
<PB C.TRAP>
C.BPF
C.TRAP
FL202
X201 4.43MHz
R250 6800
C252 68
C251 100p
Q209 DTC144EU
R247 68
C253 0.01 B
C254 0.01 B
R298 1500
R249 1k
C256 100p
R244 10k
R245 4700
R246 10k
Q247 2SC4081
R243 820
C257 0.01 F
C258 10 6.3V :TA B
JL253
Q247 (I-22) FSC BUFFER
Q258 DTC144TU
Q258 (H-23) SWITCH
Q213 (I-22) EQ
Q221 (J-9) TRAP SWITCH
Q214,222,223 (J-23)(J-10)(J-22) HALF H SHIFT CANCEL
Q212 (J-9) CLIP COMP
Q260,261 (J-10)(J-23) V REG BUFFER
R271 560
L208 33μH
C271 270p
R276 10k
R277 120
L209 56μH
C273 56p
R278 4700
Q219 2SA1576
Q218 2SC4081
Q225 2SC4081
RV205 2200
Q217 2SC2223
R272 1k
R273 4700
R275 1k
C272 22p
R274 2200
R279 1k
C270 10 6.3V :TA B
R284 1200
C261 18p
R282 2700
C263 0.1 :2125 B
R285 4700
C262 470p B
R283 1k
R281 1500
C269 10 6.3V B
R270 470 1/10W :M
C267 470p :2125
C268 390p :2125
R269 1k 1/10W :M
R280 680
R267 2700
C359 0.1 F
R268 8200
RV203 2200
RV204 4700
C358 1 :3216 F
C266 10 6.3V :TA B
R306 220
R305 10k
R251 6800
R253 680
C240 120p
C265 12p
L205 39μH
R260 0
C250 68p
R252 5600
R254 3900
R259 820
C264 100p
C259 22p
R255 820
R256 10k
R257 470k
R258 0
R262 2200
R265 1M
R264 220
R263 2200
R261 1k
L207 100μH
RV202 1k
Y VCC
COMB OUT
SHP IN
VG1
TC2
TC1
Y GND
BEV
CAR
BEEMP IN
BEMOD OUT
L VCC
SYNC
DEV
CAR SET
EMPH LEVEL
PB LEVEL
COMP IN
SHP OUT
EMP
PB Y+C OUT
PB C IN
GND
REC Y RF
PB Y RF
APC ADJ
C GND
CF
C VCC
PBC RF IN
PBC OUT
REC Y+C IN
V REF
CCDO
VG2
CCDI
LIM
YD
SHP CON
Y-YD
IRIS
TH
VREG
TCS
NCTC IN
Y VCC
REC Y+C
IC203 CXA1200Q
1 2 3 4 5 6 7 8 9 10 11 12 13 14 15 16 17 18 19
22 23 24 25 26 27 28 29 30 31 32 33
1 2 3 4 5 6 7 8 9 10 11 12 13 14 15 16 17 18 19 20 21 22 23 24 25 26 27 28 29 30 31 32 33 34 35 36 37 38 39 40 41 42 43 44 45 46 47 48 49 50 51 52
JL255
JL256
JL254
JL295
JL250
JL251
JL258
JL293
JL294
JL296
JL297
JL298
JL299
JL300
JL301
JL302
JL303
JL304
JL305
JL306
JL307
JL308
JL309
JL310
JL311
JL312
JL313
JL314
JL315
JL316
JL317
JL318
JL319
JL320
JL321
JL322
JL323
JL324
JL325
JL326
JL327
JL328
JL329
JL330
JL331
JL332
JL333
JL334
JL335

VS-69 (SERVO/SYSTEM CONTROL) SCHEMATIC DIAGRAM

— Ref. No. VS-69, CB-32P BOARDS: 2000 series —

VS-69 BOARD (3/3)

35

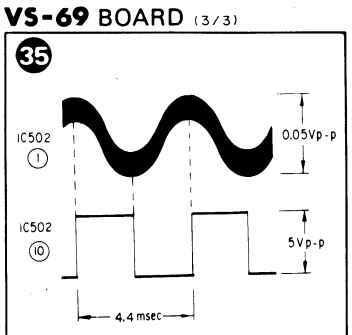

IC502 (1) (10) REC/PB

36

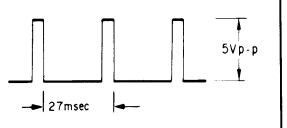

IC502 (9) REC/PB

37

IC502 (12) REC/PB

38

IC505 (14) REC/PB

39

IC505 (16) REC/PB

40

IC601 (34), (35) REC/PB (34) 2.6 Vp-p (35) 2Vp-p

41

IC601 (58) REC/PB

42

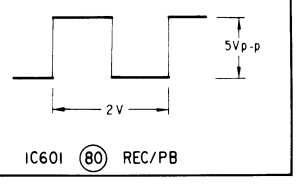

IC601 (80) REC/PB

- **SIGNAL PATH**

	VIDEO SIGNAL			AUDIO SIGNAL
	CHROMA	Y	Y/CHROMA/DATA	
REC				
PB			⇨	

	REC	REC/PB	PB
Drum speed servo		▷	
Drum phase servo		▷	
Drum servo (speed and phase)		▷	
Capstan speed servo			
Capstan phase servo			▷
Capstan servo (speed and phase)		▷	
Ref. signal	▶		▷

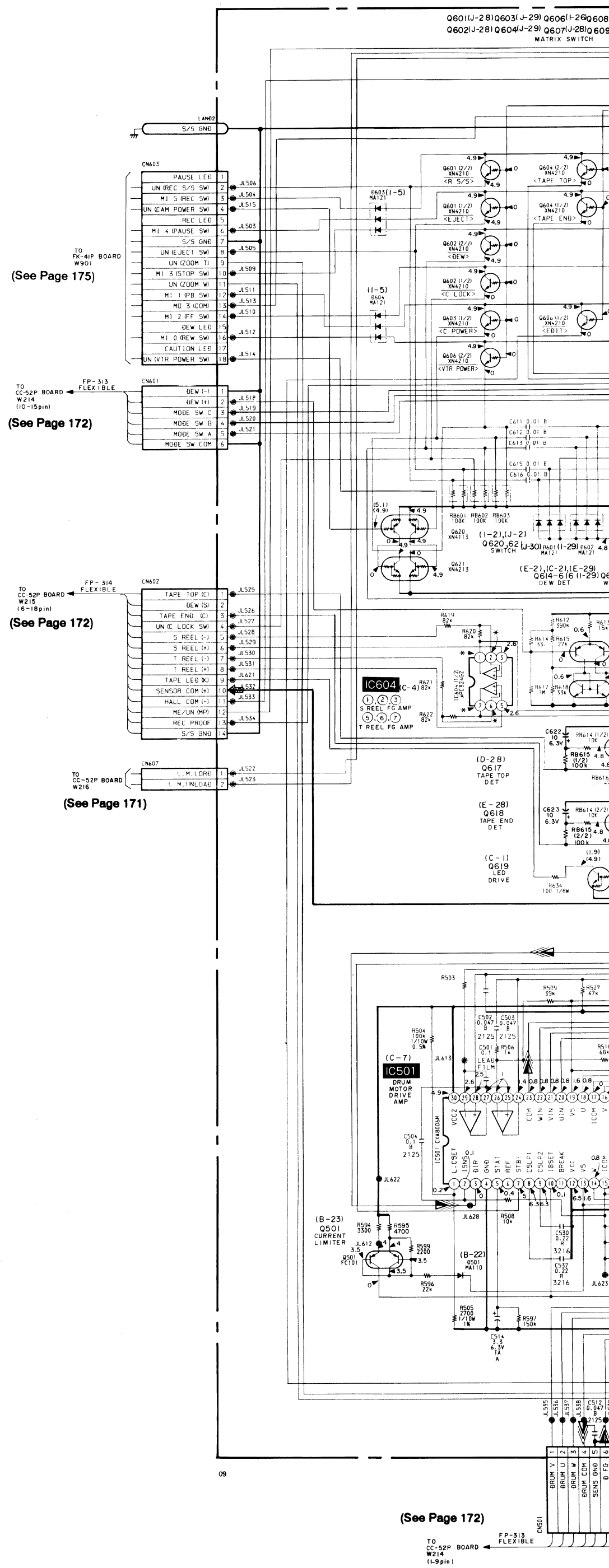

09

(See Page 193)

(See Page 193)

TO DD-31P BOARD CN102 FP-355 FLEXIBLE

W605: BATT SENSE, MOTOR GND, MOTOR GND, CAP FB, CAP VS, DRUM VS, CAP ERROR, DRUM ERROR, CAP UNREG, VTR UNREG, UN (CAM ON), UN (MTR ON), REG GND, REG GND, PEG 5V, VIDEC 5V, EVF 5V

(G-3) IC601 SYSTEM CONTROL, SERVO

IC601 CXP80116

(H-9) Q611 INVERTER

(I-6) Q623 SWITCH

Q643(F-29) SWITCH

Q644(E-29) SWITCH

Q645(F-28) INVERTER

(D-5),(D-25) Q571,572 CORRELATION LIMIT DETECTOR

(C-26) Q573 LIMITER

(E-26) (D-28) Q664,665(E-28) INVERTER

IC607 ①②③ CLOG DET ⑤⑥⑦ CUE/REV SP/LD DET

(F-2)

(G-26) IC505 ATF SERVO

X501 5.85938MHz

(C-27) IC504 CAPSTAN MOTOR DRIVE

(D-4) Q661 PB RF AMP

(E-4),(D-3) Q662,663 LPF

(E-5),(E-5) Q542,543 REC ATF RF

Q541 PB RF BUFFER

FP-363 FLEXIBLE

W604: 1 S/S 5V, 2 EVER 5V, 3 FADER CONT, 4 N.C., 5 UN (COSMO CS), 6 UN (80S SCK), 7 80S SO, 8 80S SI, 9 UN (SYSTEM RESET), 10 UN (CAM ADJ), 11 SERIAL CONT, 12 EVF W, 13 UN (ZOOM T), 14 UN (ZOOM W), 15 UN (EDIT SW/SP) /LP, 16 S/S GND

FP-184 FLEXIBLE

C1 UN (TEST)
C2 UN (CAM ADJ)
C3 UN (SP) /LP
C4 CAP FG
C5 UN (PATH)
C6 DRUM 1 COM
C7 RP GND
C8 REC 1A
C9 REC 2A
C10 REC 1B
C11 REC 2B
C12 PB 1A MUTE
C13 PB 2A MUTE
C14 PB 1B MUTE
C15 PB 2B MUTE
C16 RF SWP
C17 UN (1/2 RF SWP)
C18 UN (FE ON)
C19 RP PB MODE
C20 ME/UN (MP)
C21 PB RF
C22 UN (REC C CHECK)
C23 REC ATF RF

TO VS-69 BOARD (1/3) (R/P) (See Page 1

B3 SP/UN (LP)
C16 RF SWP
A20 UN (VIDEO CS)
A19 UN (AUDIO STB)
A18 VIDEO 5V
C7 VIDEO GND
A16 COSMO SO
A15 UN (COSMO SCK)
A14 UN (SYSTEM RESET)
A13 COMP SYNC
A12 JOG VΦ
A23 UN (REC LED)

TO VS-69 BOARD (2/3) (SS) (See Page 1

A10 AUDIO 5V
C7 AUDIO GND
A8 EVF W
A7 FADER
A10 S/S 5V
C7 S/S GND
A4 UN (TALLY)
A3 EVF 5V
C7 EVF GND
C3 UN (EDIT)
A24 UN (DEW LED)
C20 ME/UN (MP)

no mark : REC/PB mode
( ) : REC mode
( ) : PB mode
* : can not be measured

VS-69 BOARD (3/3)
(SS)

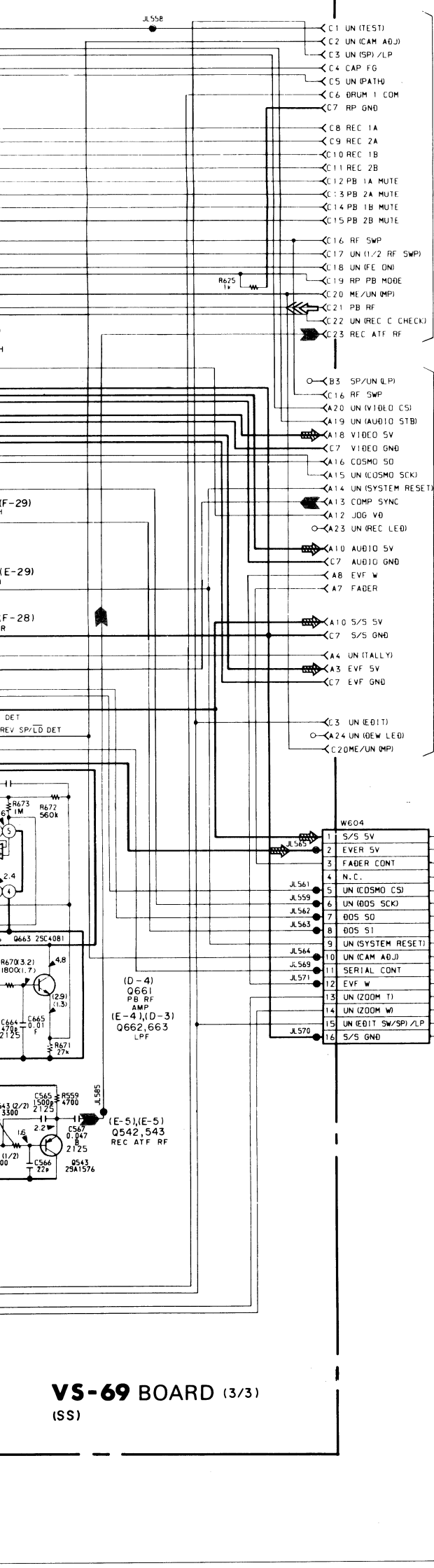

VS-69 BOARD

IC101	D-12	Q259	J-8
IC102	D-20	Q260	J-10
IC201	J-19	Q261	J-23
IC202	G-8	Q270	H-18
IC203	G-24	Q272	E-25
IC204	H-20	Q501	B-24
IC205	J-24	Q541	F-28
IC501	C-9	Q542	E-5
IC502	C-27	Q543	E-5
IC504	C-28	Q571	D-6
IC505	G-27	Q572	D-27
IC601	G-4	Q573	D-27
IC602	H-2	Q601	J-29
IC603	I-1	Q602	J-29
IC604	C-4	Q603	J-30
IC607	E-28	Q604	J-30
		Q606	J-27
D201	J-13	Q607	J-29
D211	J-23	Q608	J-29
D213	J-8	Q609	J-28
D214	H-14	Q610	J-30
D215	D-8	Q611	I-30
D216	H-13	Q612	I-30
D217	E-6	Q613	I-30
D218	G-14	Q614	E-2
D501	B-23	Q615	D-2
D601	J-31	Q616	E-30
D602	J-30	Q617	E-30
D603	J-5	Q618	E-30
D604	I-6	Q619	C-2
D605	H-30	Q620	I-2
D606	F-3	Q623	I-6
		Q643	F-30
Q161	E-21	Q644	E-30
Q162	F-21	Q645	G-30
Q164	F-12	Q661	E-4
Q165	F-20	Q662	E-4
Q166	E-18	Q663	D-3
Q191	A-21	Q664	E-29
Q193	A-22	Q665	E-29
Q201	H-17	Q681	C-2
Q202	H-18	Q682	D-30
Q203	H-17		
Q204	I-18		
Q205	J-14		
Q206	J-21		
Q207	J-10		
Q208	G-22		
Q209	F-23		
Q211	J-20		
Q212	J-9		
Q213	I-22		
Q214	J-23		
Q215	J-21		
Q216	J-20		
Q217	I-25		
Q218	J-26		
Q219	J-7		
Q220	J-26		
Q221	J-9		
Q222	J-10		
Q223	J-22		
Q224	H-26		
Q224	I-26		
Q225	J-25		
Q226	J-21		
Q227	E-25		
Q228	E-23		
Q229	H-22		
Q230	J-12		
Q231	J-11		
Q232	J-11		
Q233	F-13		
Q234	G-19		
Q235	G-20		
Q236	G-13		
Q237	E-24		
Q238	D-25		
Q239	E-6		
Q241	G-19		
Q242	H-13		
Q243	H-13		
Q244	H-13		
Q245	E-8		
Q246	E-23		
Q247	I-22		
Q248	E-10		
Q249	E-24		
Q250	H-12		
Q251	H-21		
Q252	E-7		
Q253	G-20		
Q254	J-8		
Q256	J-25		
Q258	H-23		

VS-69 (HEAD AMP/VIDEO/SERVO/SYSTEM CONTROL), CB-32P (LINK), PIN JACK ASSEMBLY (TERMINAL) PRINTED WIRING BOARDS

— Ref. No. VS-69 BOARD: 2000 series —

- **For printed wiring boards.**
- VS-69, CB-32P boards are the printed wiring board which has four layers structure but inner two layers' patterns are omitted.
- PIN JACK Assembly is replaced as blocks, so that there PRINTED WIRING BOARDS are omitted.

VS-69 BOARD (COMPONENT SIDE)

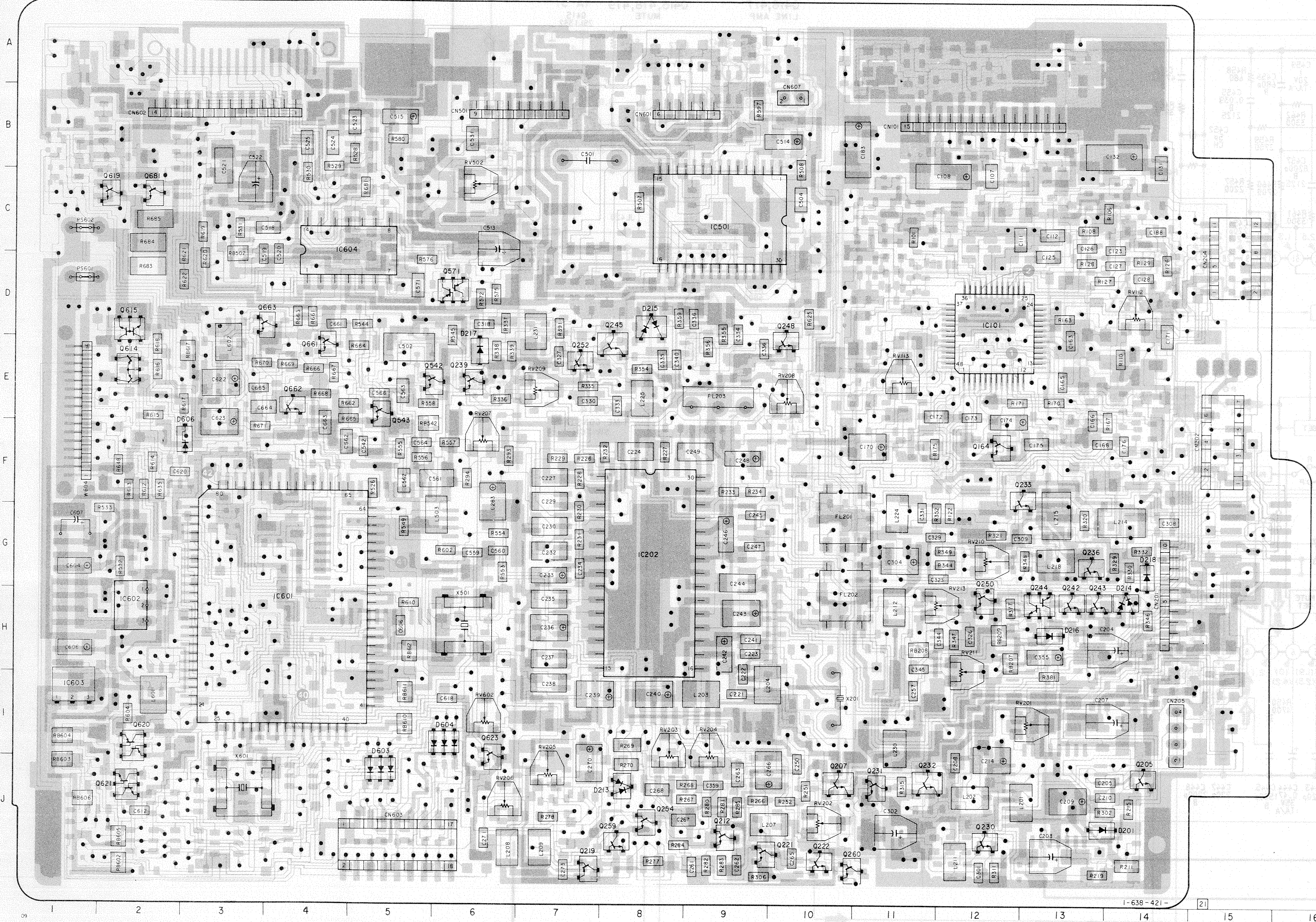

VS-69 BOARD (CONDUCTOR SIDE)

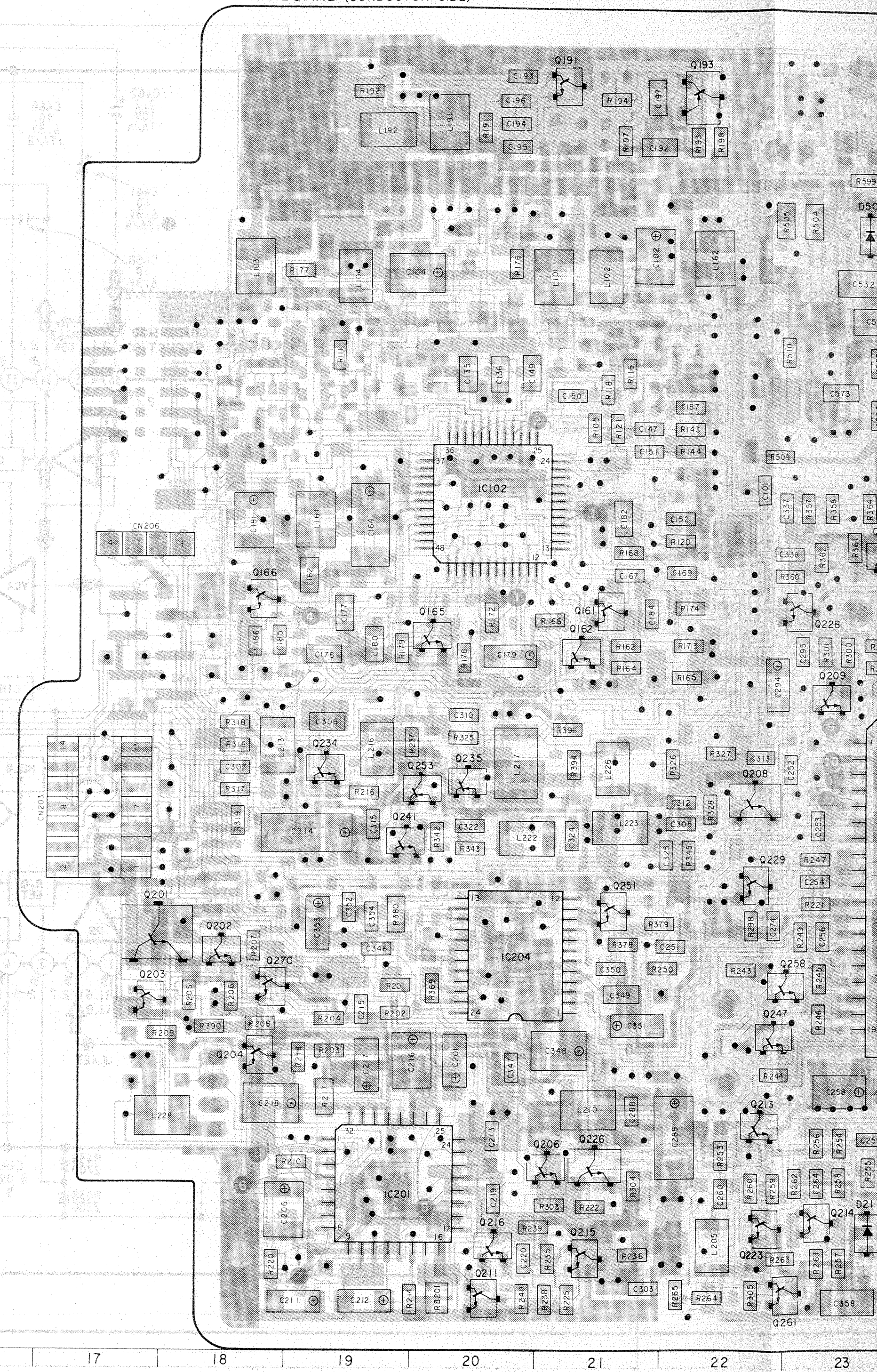

ced as blocks, so that there
e omitted.

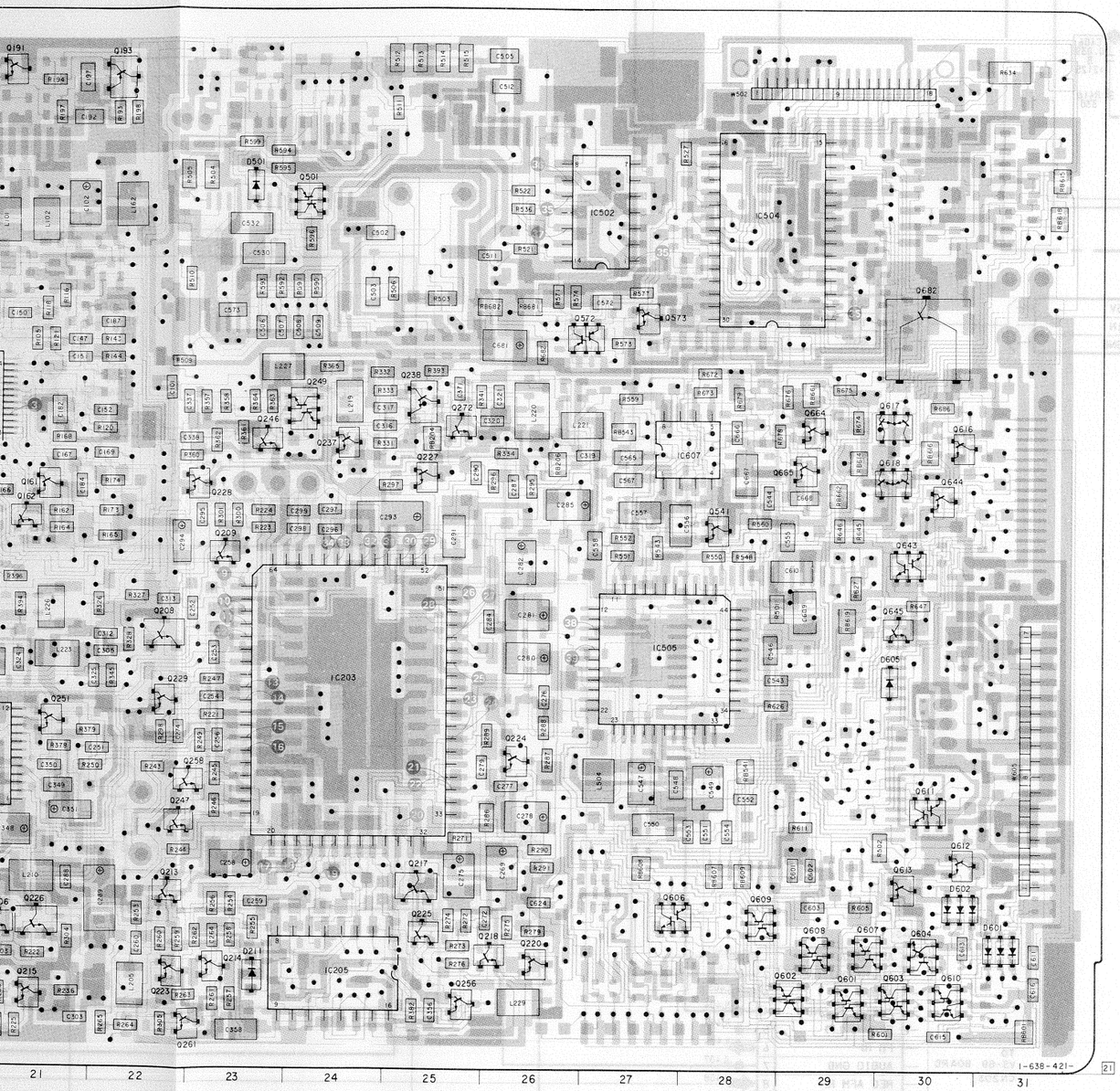

VS-69 BOARD, COMPLETE
****

< DIODE >

D201	8-719-404-46	DIODE MA110
D211	8-719-118-21	DIODE 1SS283
D213	8-719-404-35	DIODE MA141WK
D214	8-719-404-35	DIODE MA141WK
D215	8-719-800-76	DIODE 1SS226
D216	8-719-404-46	DIODE MA110
D217	8-719-404-46	DIODE MA110
D218	8-719-404-46	DIODE MA110
D501	8-719-404-46	DIODE MA110
D601	8-719-404-40	DIODE MA121
D602	8-719-404-40	DIODE MA121
D603	8-719-404-40	DIODE MA121
D604	8-719-404-40	DIODE MA121
D605	8-719-404-46	DIODE MA110
D606	8-719-404-46	DIODE MA110

< IC >

IC101	8-752-033-38	IC CXA1202R
IC102	8-752-033-38	IC CXA1202R
IC201	8-752-033-40	IC CXA1201Q
IC202	8-752-324-87	IC CXL1502M
IC203	8-752-034-40	IC CXA1200BQ
IC204	8-759-605-61	IC CXA1203N
IC205	8-759-009-22	IC MC14094BF
IC501	8-759-990-55	IC CXA8006M
IC502	8-759-148-05	IC CXA8010M
IC504	8-752-038-71	IC CXA1127AM
IC505	8-752-035-48	IC CXA1204Q
IC601	8-752-818-58	IC CXP80116-822Q
IC602	8-759-502-36	IC S-81350HG
IC603	8-759-987-66	IC TL7757
IC604	8-759-100-95	IC uPC324G2
IC607	8-759-100-93	IC uPC393G2

< TRANSISTOR >

Q161	8-729-905-12	TRANSISTOR DTA144EU
Q162	8-729-117-32	TRANSISTOR 2SC4177
Q164	8-729-905-18	TRANSISTOR DTC144EU
Q165	8-729-905-18	TRANSISTOR DTC144EU
Q166	8-729-905-18	TRANSISTOR DTC144EU
Q191	8-729-117-16	TRANSISTOR 2SA1611
Q193	8-729-216-22	TRANSISTOR 2SA1162
Q201	8-729-101-07	TRANSISTOR 2SB798-DL
Q202	8-729-602-36	TRANSISTOR 2SA1602
Q203	8-729-602-36	TRANSISTOR 2SA1602
Q204	8-729-905-18	TRANSISTOR DTC144EU
Q205	8-729-602-36	TRANSISTOR 2SA1602
Q206	8-729-907-00	TRANSISTOR DTC114EU
Q207	8-729-140-88	TRANSISTOR FP1A3M
Q208	8-729-102-07	TRANSISTOR 2SC2223-F13
Q209	8-729-905-18	TRANSISTOR DTC144EU
Q211	8-729-905-61	TRANSISTOR DTC124EU
Q212	8-729-602-36	TRANSISTOR 2SA1602
Q213	8-729-117-32	TRANSISTOR 2SC4177
Q214	8-729-117-32	TRANSISTOR 2SC4177
Q215	8-729-602-36	TRANSISTOR 2SA1602
Q216	8-729-117-32	TRANSISTOR 2SC4177
Q217	8-729-102-07	TRANSISTOR 2SC2223-F13
Q218	8-729-117-32	TRANSISTOR 2SC4177
Q219	8-729-602-36	TRANSISTOR 2SA1602
Q220	8-729-117-32	TRANSISTOR 2SC4177
Q221	8-729-905-12	TRANSISTOR DTA144EU
Q222	8-729-117-32	TRANSISTOR 2SC4177
Q224	8-729-905-12	TRANSISTOR DTA144EU
Q225	8-729-117-32	TRANSISTOR 2SC4177
Q226	8-729-807-87	TRANSISTOR 2SB1295-UL6
Q227	8-729-602-36	TRANSISTOR 2SA1602
Q228	8-729-117-32	TRANSISTOR 2SC4177
Q229	8-729-905-15	TRANSISTOR DTC144WU
Q230	8-729-117-32	TRANSISTOR 2SC4177
Q231	8-729-905-15	TRANSISTOR DTC144WU
Q232	8-729-140-88	TRANSISTOR FP1A3M
Q233	8-729-117-32	TRANSISTOR 2SC4177
Q234	8-729-117-32	TRANSISTOR 2SC4177
Q235	8-729-602-36	TRANSISTOR 2SA1602
Q236	8-729-117-16	TRANSISTOR 2SA1611
Q237	8-729-117-16	TRANSISTOR 2SA1611
Q238	8-729-102-07	TRANSISTOR 2SC2223-F13
Q239	8-729-117-32	TRANSISTOR 2SC4177
Q241	8-729-602-36	TRANSISTOR 2SA1602
Q242	8-729-905-18	TRANSISTOR DTC144EU
Q243	8-729-905-12	TRANSISTOR DTA144EU
Q244	8-729-420-12	TRANSISTOR XN4213
Q245	8-729-102-07	TRANSISTOR 2SC2223-F13
Q246	8-729-117-32	TRANSISTOR 2SC4177
Q247	8-729-117-32	TRANSISTOR 2SC4177
Q248	8-729-905-12	TRANSISTOR DTA144EU
Q249	8-729-420-12	TRANSISTOR XN4213
Q250	8-729-905-12	TRANSISTOR DTA144EU
Q251	8-729-905-18	TRANSISTOR DTC144EU
Q252	8-729-117-32	TRANSISTOR 2SC4177
Q253	8-729-117-32	TRANSISTOR 2SC4177
Q254	8-729-905-12	TRANSISTOR DTA144EU
Q256	8-729-905-18	TRANSISTOR DTC144EU
Q258	8-729-921-08	TRANSISTOR DTC144TU
Q259	8-729-921-58	TRANSISTOR DTA144TU
Q260	8-729-117-32	TRANSISTOR 2SC4177
Q261	8-729-602-36	TRANSISTOR 2SA1602
Q270	8-729-602-36	TRANSISTOR 2SA1602
Q272	8-729-602-36	TRANSISTOR 2SA1602
Q501	8-729-920-39	TRANSISTOR IMT1US
Q541	8-729-602-36	TRANSISTOR 2SA1602
Q542	8-729-117-32	TRANSISTOR 2SC4177
Q543	8-729-602-36	TRANSISTOR 2SA1602
Q571	8-729-920-39	TRANSISTOR IMT1US
Q572	8-729-920-39	TRANSISTOR IMT1US
Q573	8-729-117-32	TRANSISTOR 2SC4177
Q601	8-729-403-24	TRANSISTOR XN4210
Q602	8-729-403-24	TRANSISTOR XN4210
Q603	8-729-403-24	TRANSISTOR XN4210
Q604	8-729-403-24	TRANSISTOR XN4210
Q606	8-729-403-24	TRANSISTOR XN4210
Q607	8-729-403-24	TRANSISTOR XN4210
Q608	8-729-403-24	TRANSISTOR XN4210
Q609	8-729-403-24	TRANSISTOR XN4210
Q610	8-729-403-24	TRANSISTOR XN4210
Q611	8-729-420-12	TRANSISTOR XN4213
Q612	8-729-905-12	TRANSISTOR DTA144EU
Q613	8-729-905-18	TRANSISTOR DTC144EU
Q614	8-729-903-97	TRANSISTOR FMS1FE
Q615	8-729-903-82	TRANSISTOR FMW2
Q616	8-729-117-32	TRANSISTOR 2SC4177
Q617	8-729-903-10	TRANSISTOR FMW1
Q618	8-729-903-10	TRANSISTOR FMW1
Q619	8-729-907-00	TRANSISTOR DTC114EU
Q620	8-729-421-90	TRANSISTOR XN4113
Q621	8-729-420-12	TRANSISTOR XN4213
Q623	8-729-117-32	TRANSISTOR 2SC4177
Q643	8-729-403-24	TRANSISTOR XN4210
Q644	8-729-905-12	TRANSISTOR DTA144EU
Q645	8-729-905-18	TRANSISTOR DTC144EU
Q661	8-729-117-32	TRANSISTOR 2SC4177
Q662	8-729-602-36	TRANSISTOR 2SA1602
Q663	8-729-117-32	TRANSISTOR 2SC4177
Q664	8-729-602-36	TRANSISTOR 2SA1602
Q665	8-729-117-32	TRANSISTOR 2SC4177
Q681	8-729-117-32	TRANSISTOR 2SC4177
Q682	8-729-820-46	TRANSISTOR 2SB1202FAST

CB-32 BOARD (COMPONENT SIDE)

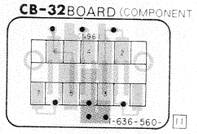

CB-32 BOARD (COMPONENT SIDE)

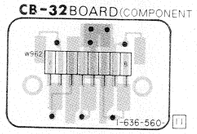

— Ref. No. AU-92P BOARD: 6000, MA-71P BOARD: 5000 series —

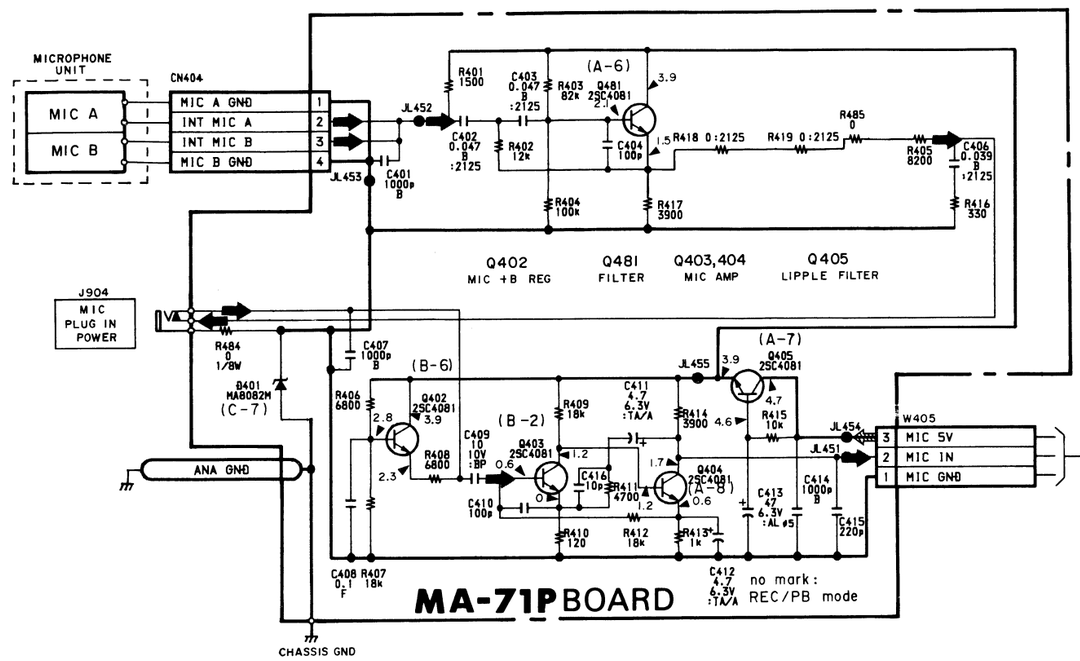

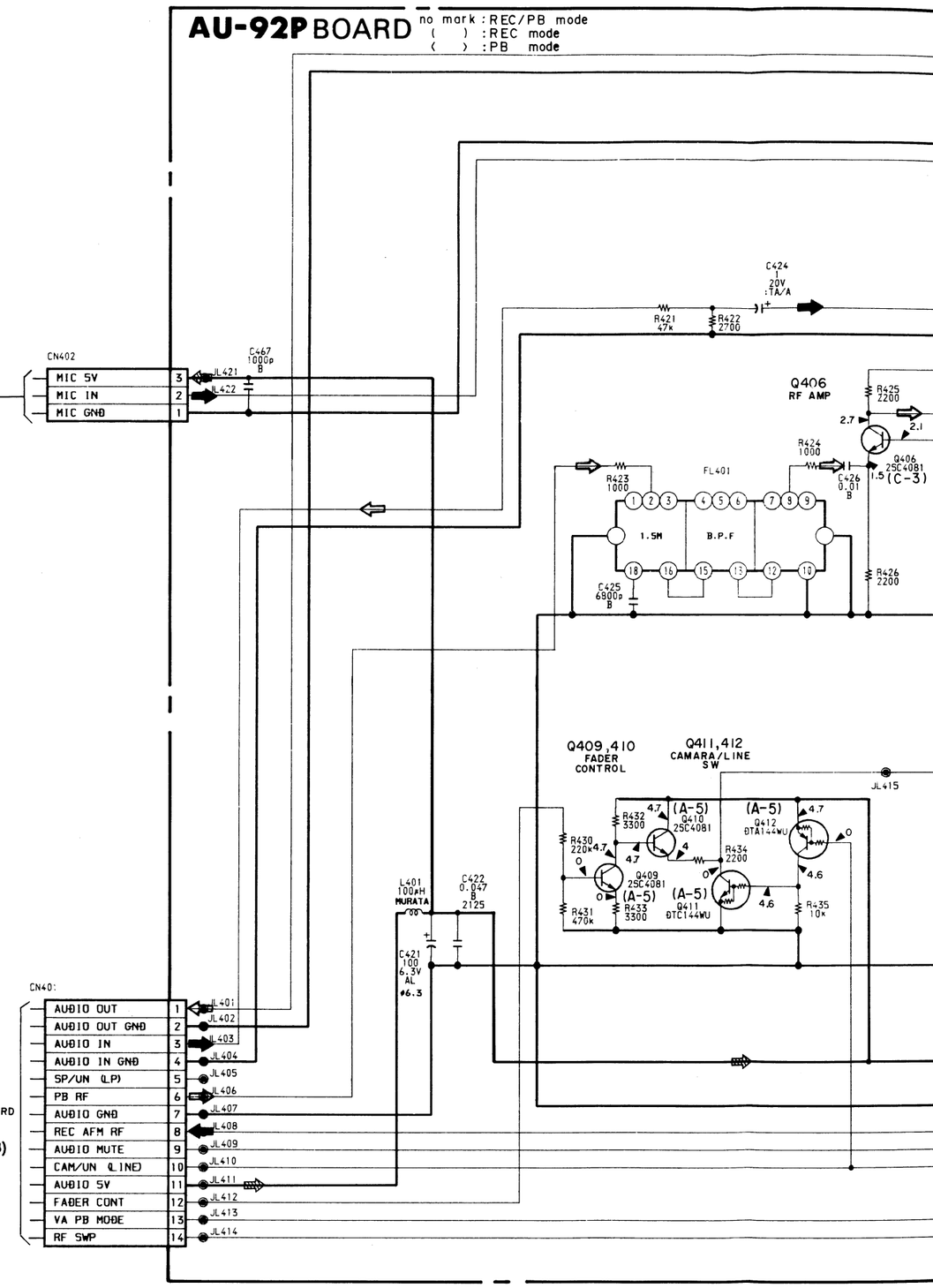

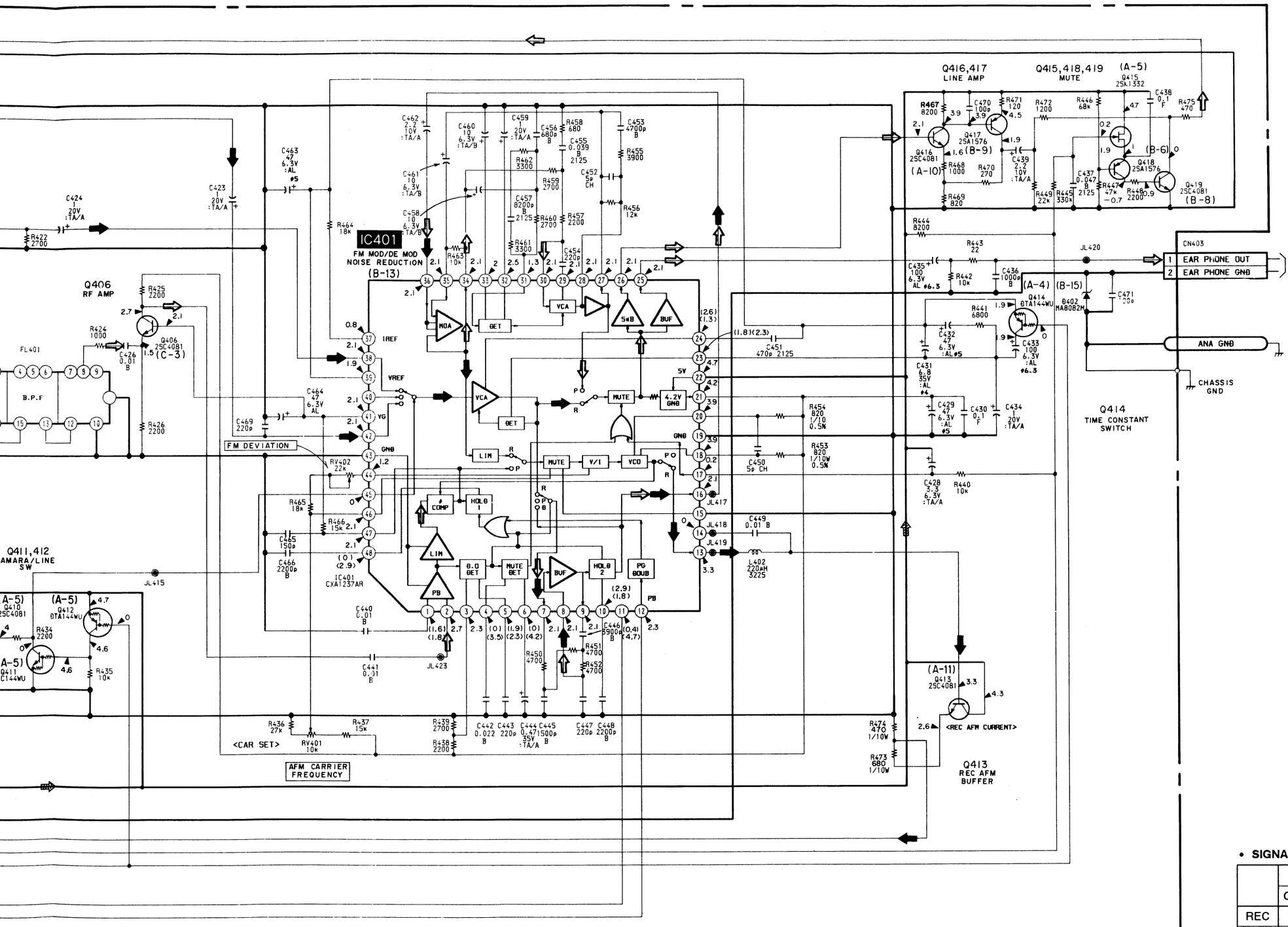

- **SIGNAL PATH**

	VIDEO SIGNAL			AUDIO SIGNAL
	CHROMA	Y	Y/CHROMA/DATA	
REC				➡
PB				⇨

AU-92P (AUDIO), MA-71P (MIC) PRINTED WIRING BOARDS

— Ref. No. AU-92P BOARD: 6000, MA-71P BOARD: 5000 series —

- **For printed wiring boards.**
- AU-92P, MA-71P boards are the printed wiring board which has four layers structure but inner two layers' patterns are omitted.

AU-92P BOARD (COMPONENT SIDE)

AU-92P BOARD

D402 B-15

IC401 B-13

Q406 C-3
Q409 A-5
Q410 A-5
Q411 A-5
Q412 A-5
Q413 A-11
Q414 A-4
Q415 A-5
Q416 A-10
Q417 B-9
Q418 B-6
Q419 B-8

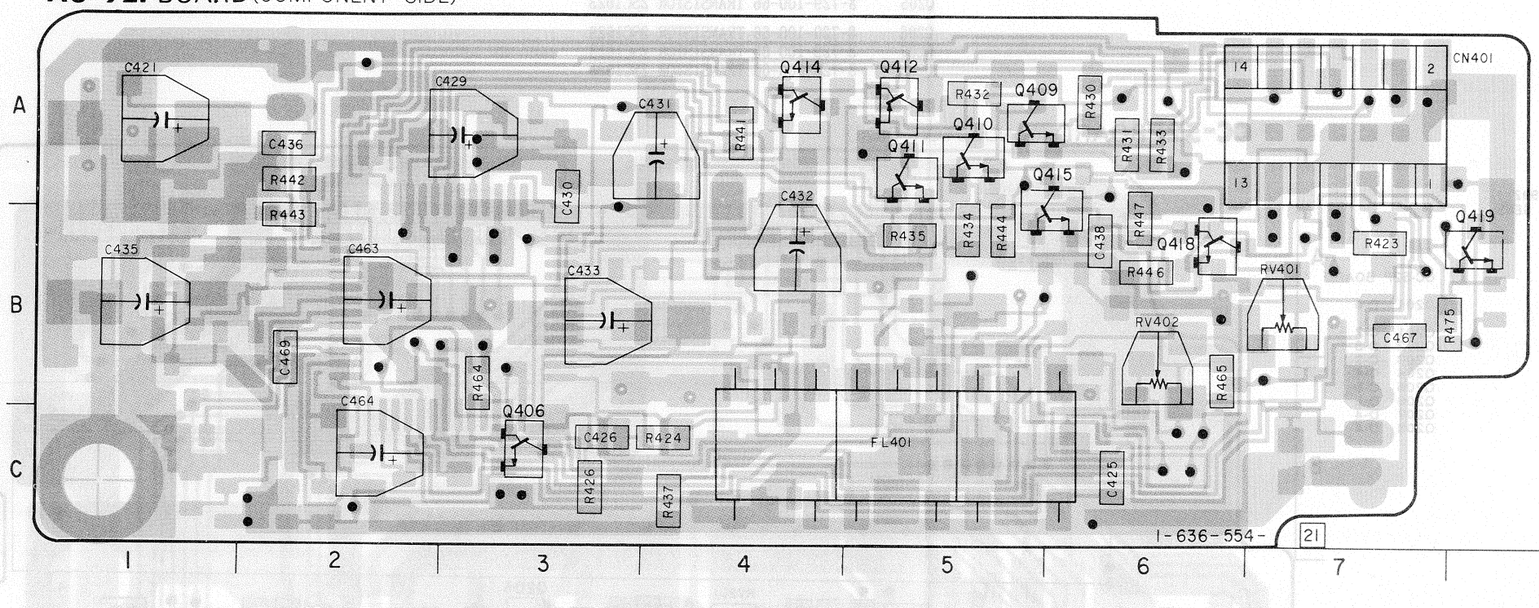

AU-92P BOARD (CONDUCTOR SIDE)

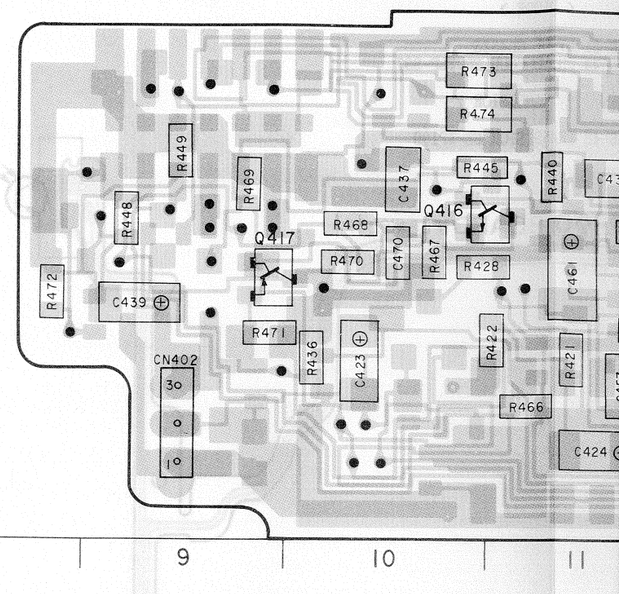

MA-71P BOARD (COMPONENT SIDE)

MA-71P BOARD

D401 C-7

Q402 B-6
Q403 B-2
Q404 A-8
Q405 A-7
Q481 A-6

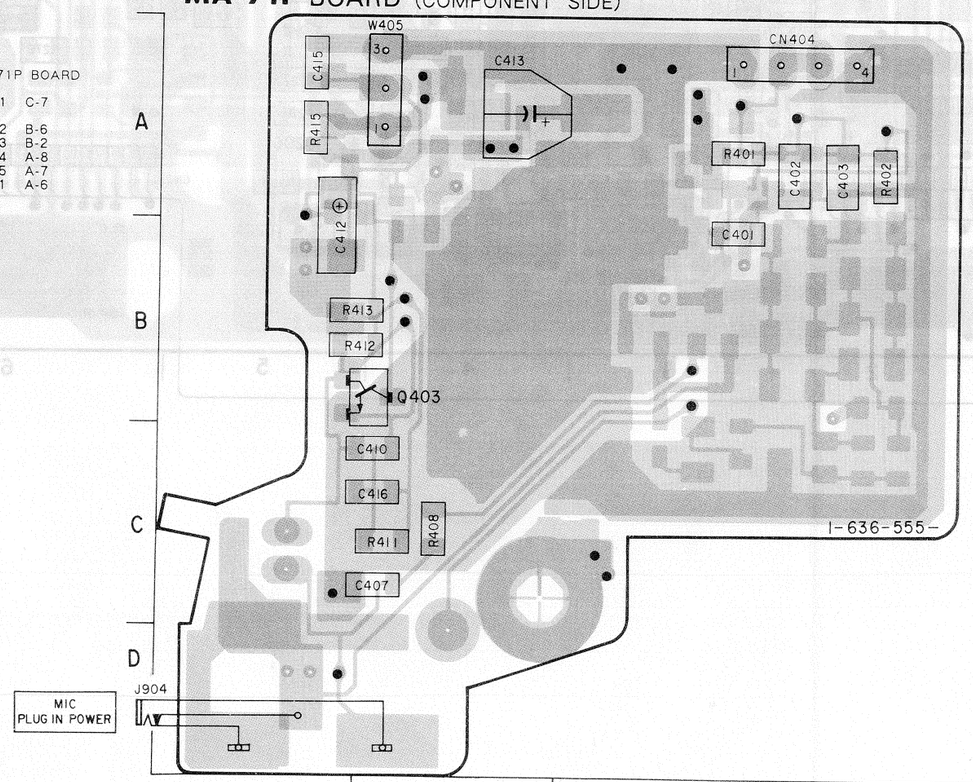

MA-71P BOARD (CONDUCTOR SIDE)

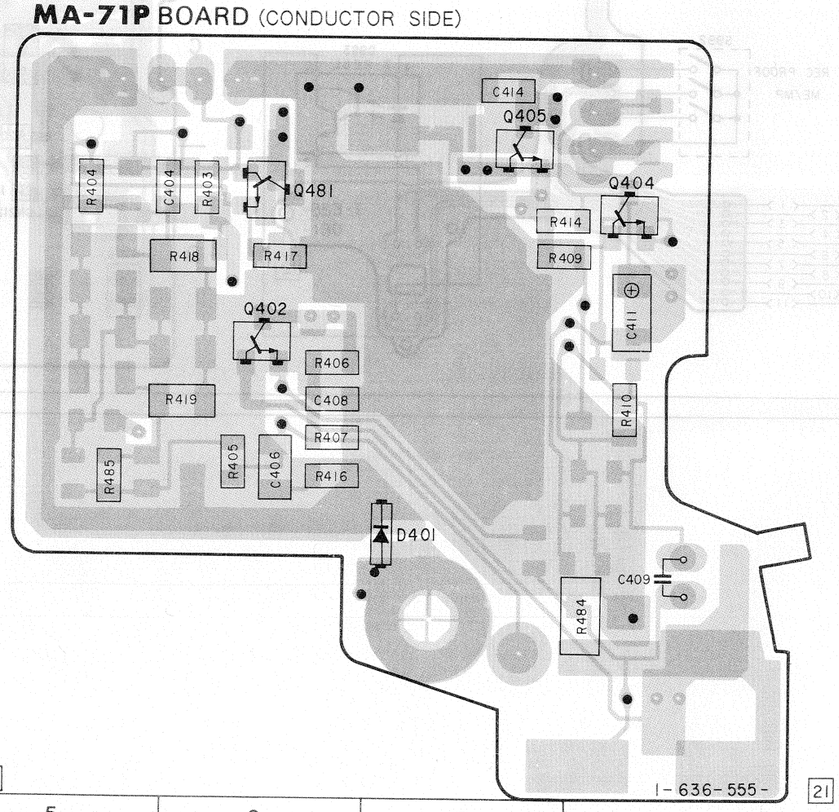

wiring board which has
patterns are omitted.

AU-92P BOARD (CONDUCTOR SIDE)

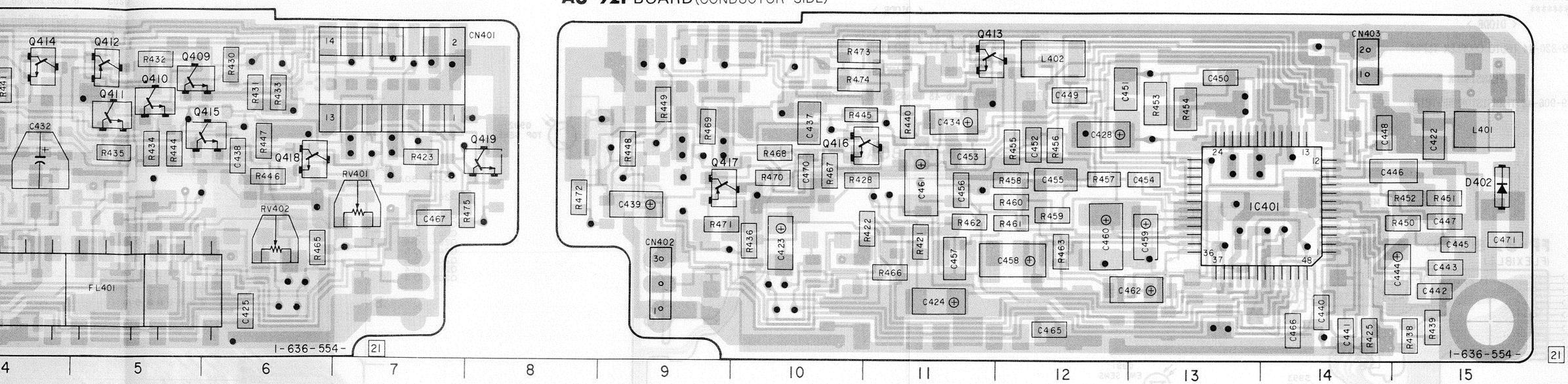

MA-71P BOARD (CONDUCTOR SIDE)

MA-71 (P) BOARD, COMPLETE
****

< DIODE >

D401 8-719-420-15 DIODE MA8082-M

< TRANSISTOR >

Q402 8-729-905-35 TRANSISTOR 2SC4081R
Q403 8-729-905-35 TRANSISTOR 2SC4081R
Q404 8-729-905-35 TRANSISTOR 2SC4081R
Q405 8-729-905-35 TRANSISTOR 2SC4081R
Q481 8-729-905-35 TRANSISTOR 2SC4081R

AU-92 (P) BOARD, COMPLETE
****

< DIODE >

D402 8-719-420-15 DIODE MA8082-M

< IC >

IC401 8-752-033-01 IC CXA1237AR

< TRANSISTOR >

Q406 8-729-117-32 TRANSISTOR 2SC4177
Q409 8-729-117-32 TRANSISTOR 2SC4177
Q410 8-729-117-32 TRANSISTOR 2SC4177
Q411 8-729-905-15 TRANSISTOR DTC144WU
Q412 8-729-905-09 TRANSISTOR DTA144WU

Q413 8-729-117-32 TRANSISTOR 2SC4177
Q414 8-729-905-09 TRANSISTOR DTA144WU
Q415 8-729-821-88 TRANSISTOR 2SK1332-3
Q416 8-729-117-32 TRANSISTOR 2SC4177
Q417 8-729-140-63 TRANSISTOR 2SA1611-M5M6

Q418 8-729-140-63 TRANSISTOR 2SA1611-M5M6
Q419 8-729-117-32 TRANSISTOR 2SC4177

CC-52P (CHROMA NOISE REDUCTION, MECHA LINK), FP-89 (SENSOR), FP-90 (SENSOR) PRINTED WIRING BOARD

— Ref. No. CC-52P BOARD: 7000, FP-89 BOARD: 11000, FP-90 BOARD: 12000 series —

FP-89 FLEXIBLE BOARD
****

< DIODE >

D991 8-719-820-44 PHOTO COUPLER TLP907

< TRANSISTOR >

Q991 8-729-906-48 TRANSISTOR EE-TP109

FP-90 FLEXIBLE BOARD
****

< DIODE >

D992 8-719-940-81 DIODE GL452S
D993 8-719-820-44 PHOTO COUPLER TLP-907

< TRANSISTOR >

Q992 8-729-906-48 TRANSISTOR EE-TP109

CC-52 (P) BOARD, COMPLETE
****

< DIODE >

D201 8-719-800-76 DIODE 1SS226

Q201 8-729-100-66
Q202 8-729-100-66
Q203 8-729-100-66
Q204 8-729-100-66
Q205 8-729-100-66
Q206 8-729-100-66
Q207 8-729-100-66
Q208 8-729-100-66

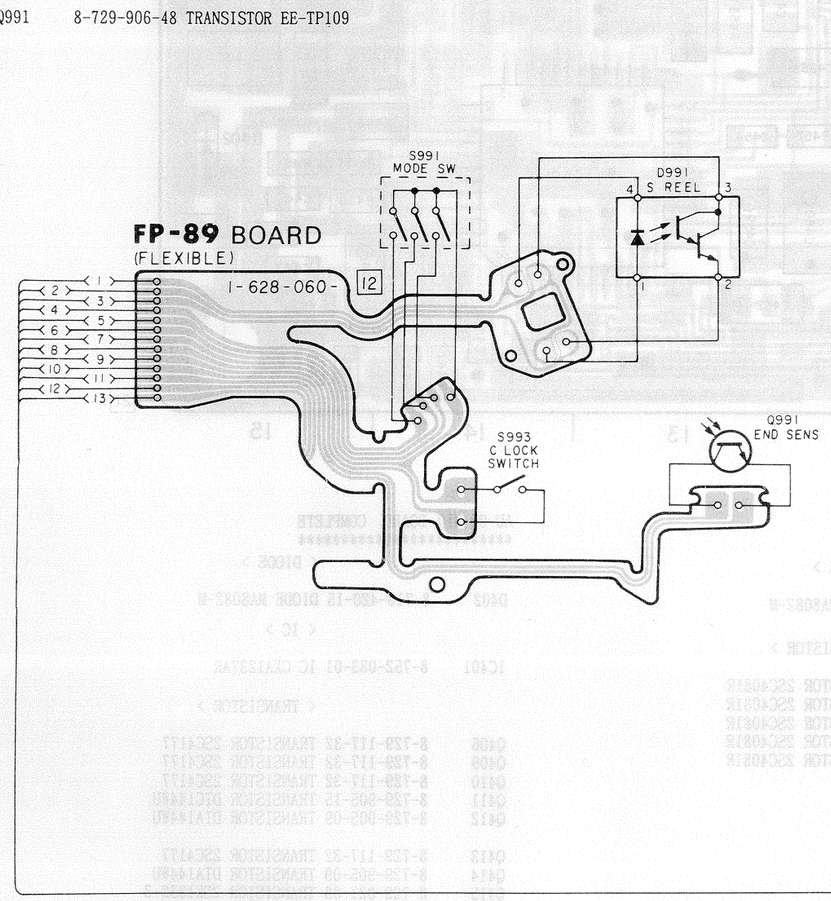

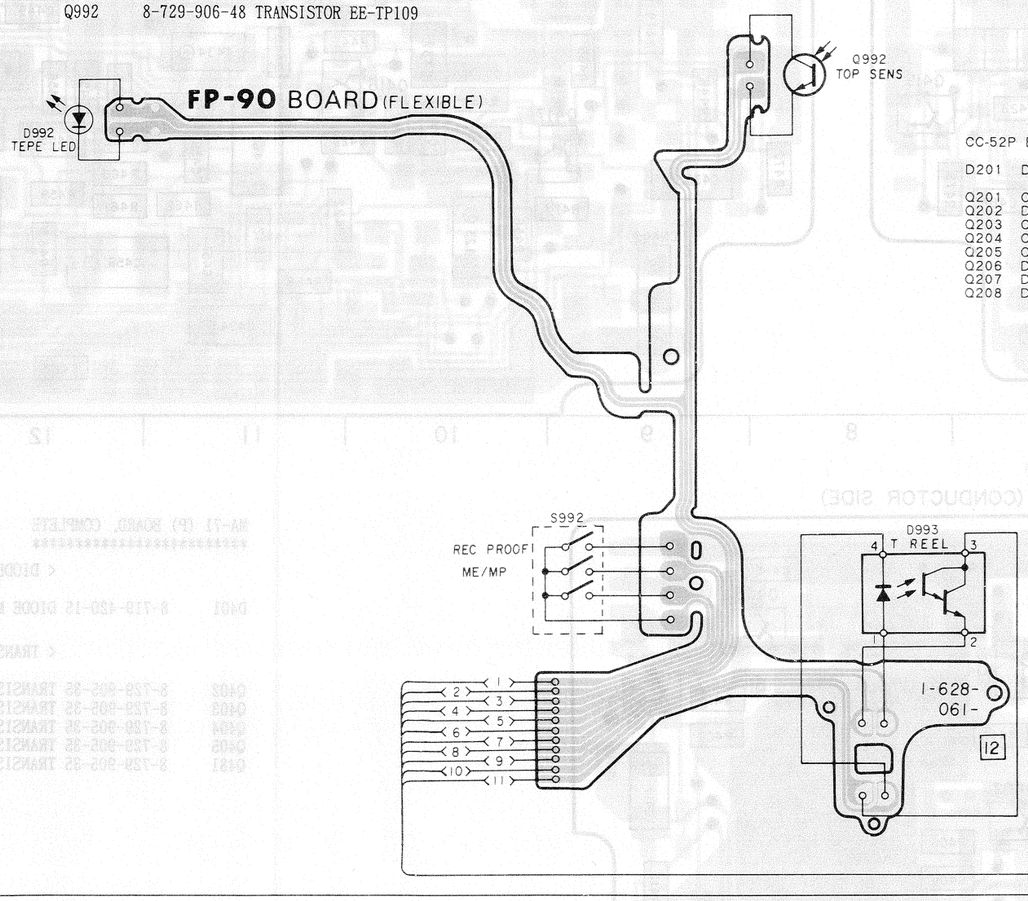

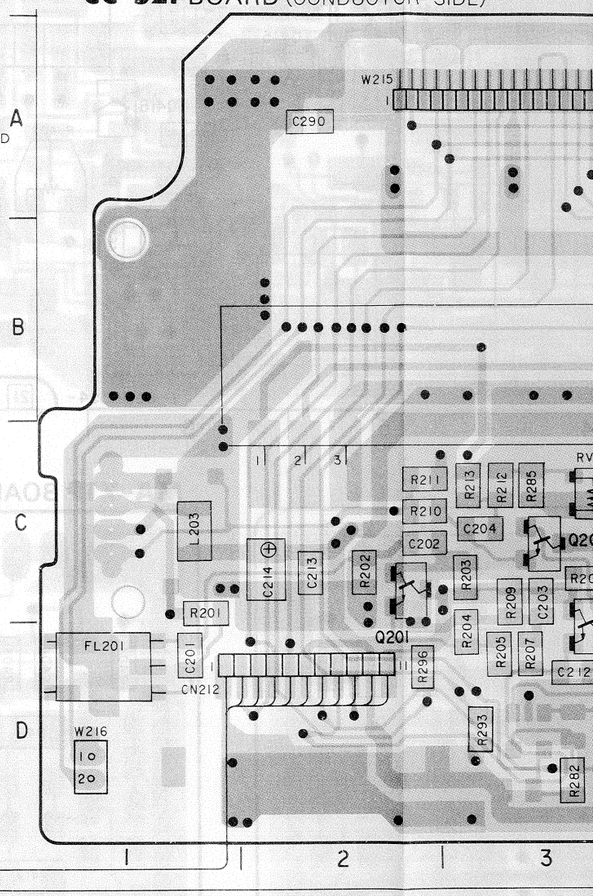

09

RING BOARD

BOARD
*****

< DIODE >

940-81 DIODE GL452S
820-44 PHOTO COUPLER TLP-907

< TRANSISTOR >

906-48 TRANSISTOR EE-TP109

CC-52 (P) BOARD, COMPLETE
****

< DIODE >

D201 8-719-800-76 DIODE 1SS226

< TRANSISTOR >

Q201 8-729-100-66 TRANSISTOR 2SC1623
Q202 8-729-100-66 TRANSISTOR 2SC1623
Q203 8-729-100-66 TRANSISTOR 2SC1623
Q204 8-729-100-66 TRANSISTOR 2SC1623
Q205 8-729-100-66 TRANSISTOR 2SC1623

Q206 8-729-100-66 TRANSISTOR 2SC1623
Q207 8-729-100-66 TRANSISTOR 2SC1623
Q208 8-729-100-66 TRANSISTOR 2SC1623

FP-90 BOARD (FLEXIBLE)

CC-52P BOARD (CONDUCTOR SIDE)

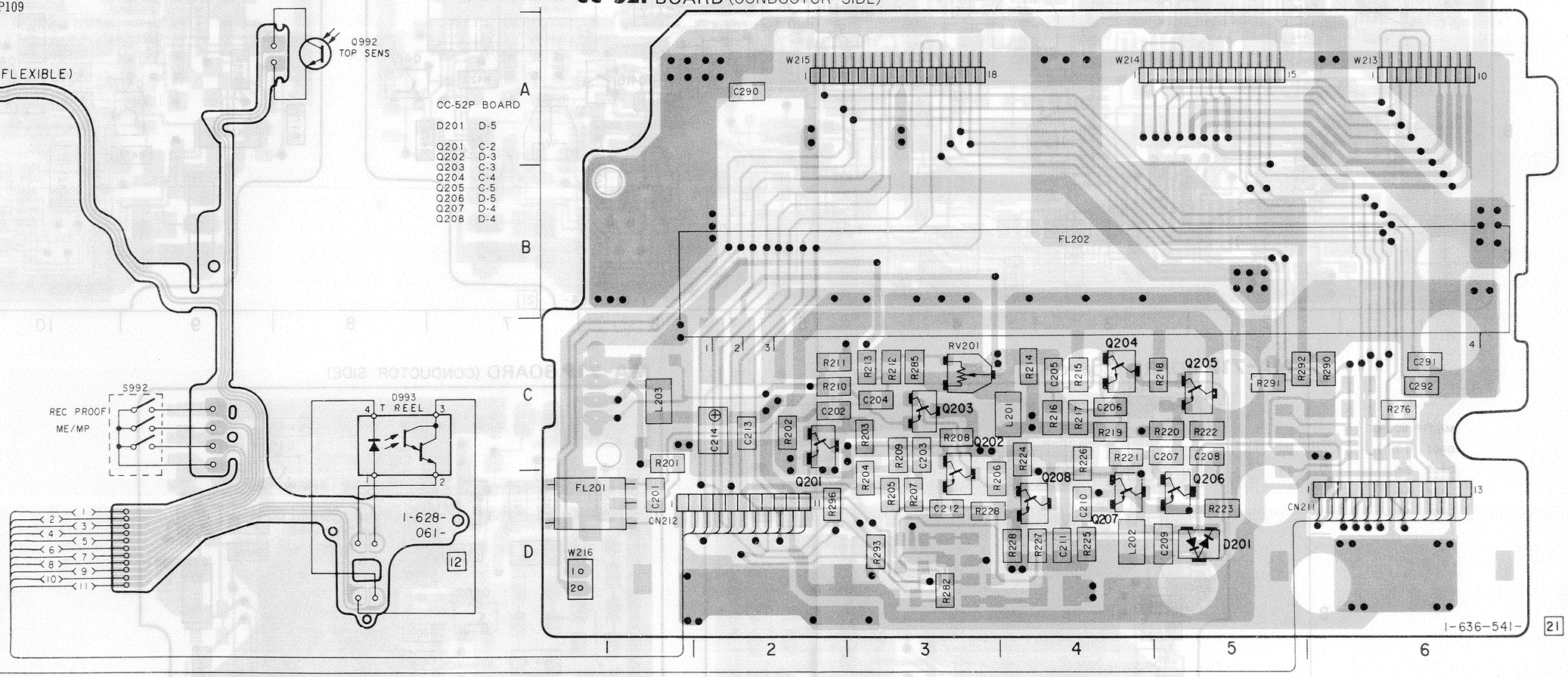

CC-52P (CHROMA NOISE REDUCTION, MECHA LINK), FP-89 (SENSOR), FP-90 (SENSOR) SCHEMATIC DIAGRAM

— Ref. No. CC-52P BOARD: 7000, FP-89 BOARD: 11000, FP-90 BOARD: 12000 series —

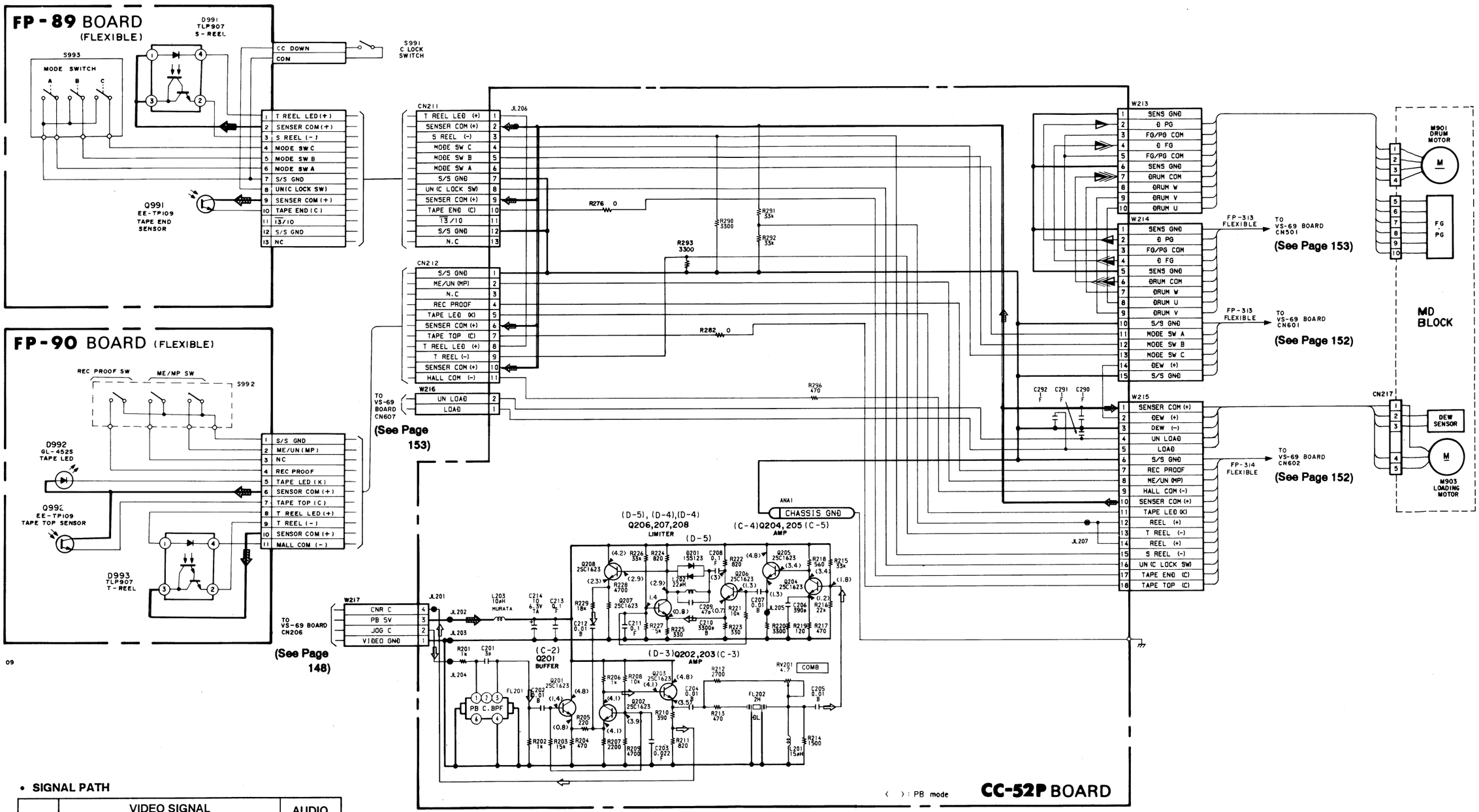

• **SIGNAL PATH**

	VIDEO SIGNAL			AUDIO SIGNAL
	CHROMA	Y	Y/CHROMA/DATA	
REC				
PB	⇨			

FK-41P (VTR FUNCTION), SW-158P (CAMERA FUNCTION), EJ-20P (EJECT SWITCH) PRINTED WIRING BOARDS

— Ref. No. FK-41P BOARD: 9000, SW-158P BOARD: 5000, EJ-20P BOARD: 10000 series —

- **For printed wiring boards.**
- ZOOM SWITCH UNIT is the printed wiring board which has four layers structure but inner two layers' patterns are omitted.

FK-41PBOARD (COMPONENT SIDE)

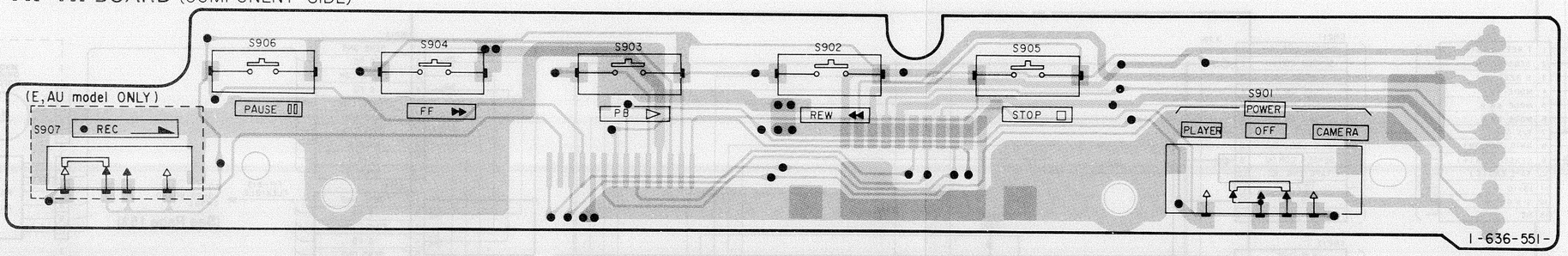

EJ-20PBOARD (COMPONENT SIDE)

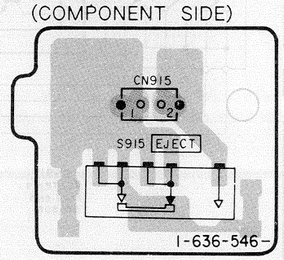

FK-41PBOARD (CONDUCTOR SIDE)

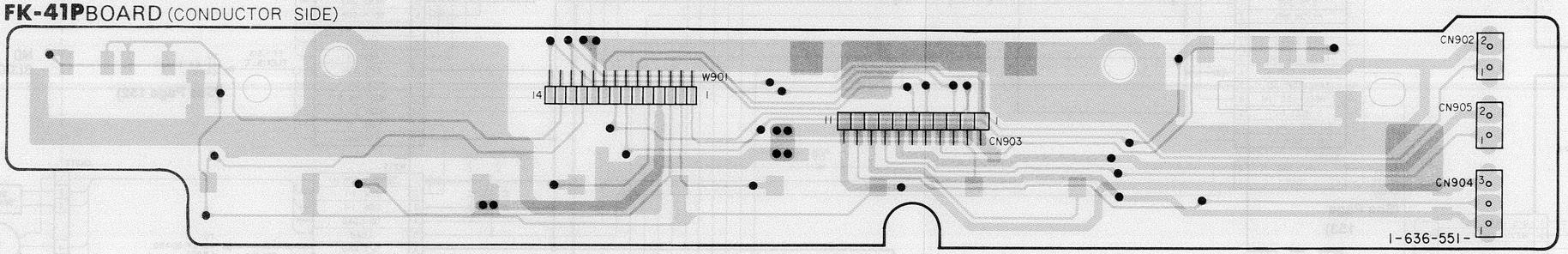

SW-158PBOARD (COMPONENT SIDE)

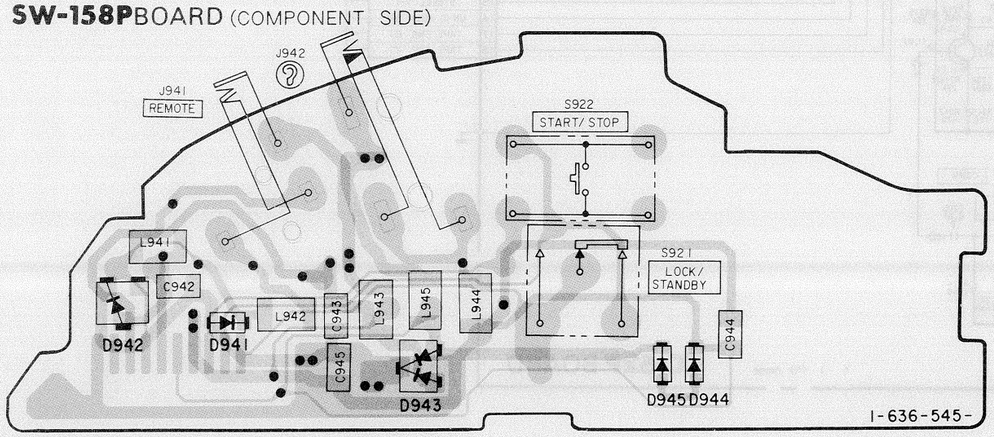

SW-158PBOARD (CONDUCTOR SIDE)

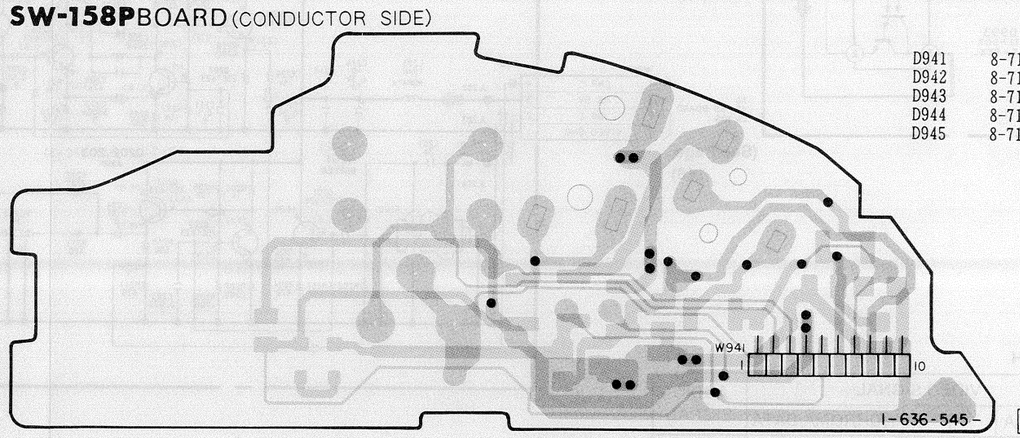

SW-158 (P) BOARD, COMPLETE
****

< DIODE >

D941	8-719-420-15 DIODE MA8082-M
D942	8-719-106-71 DIODE RD12M-B2
D943	8-719-400-18 DIODE MA152WK
D944	8-719-420-15 DIODE MA8082-M
D945	8-719-420-15 DIODE MA8082-M

09

— Ref. No. FK-41P BOARD: 9000, SW-158P BOARD: 5000, EJ-20P BOARD: 10000 series —

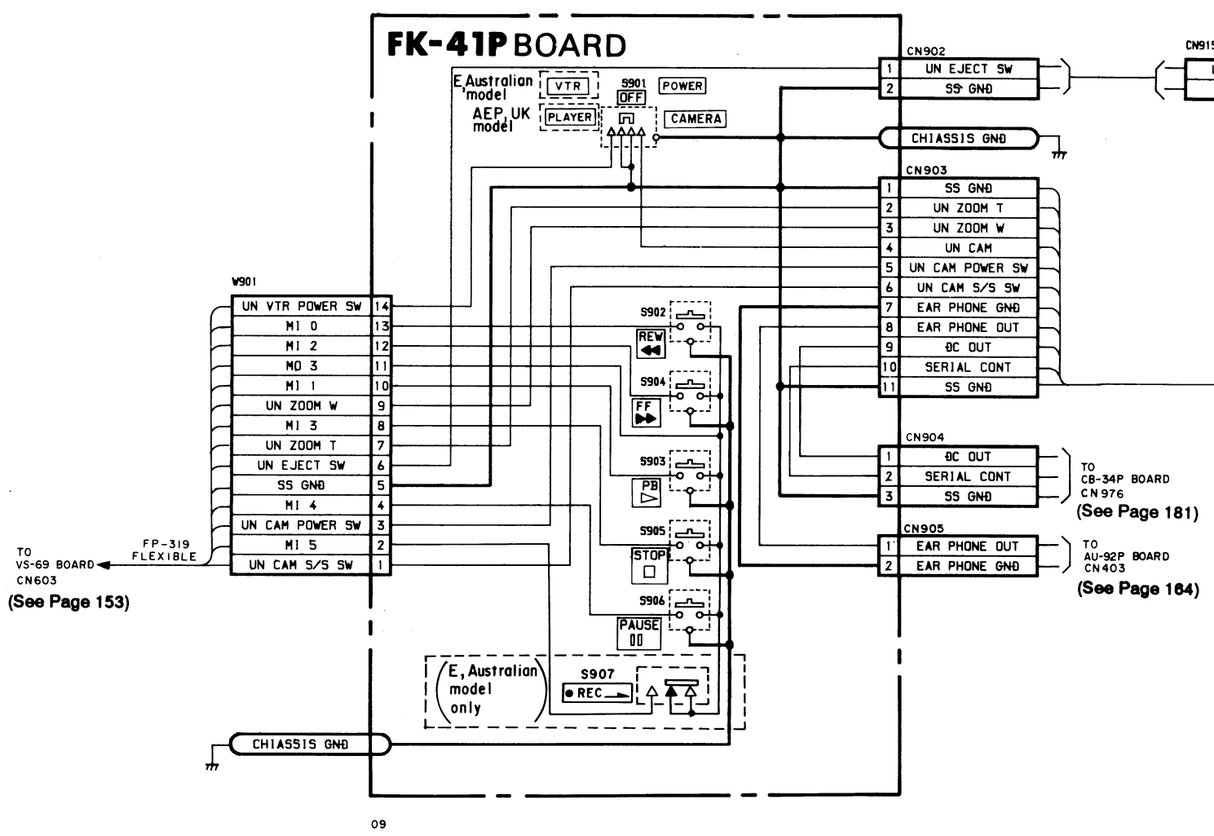

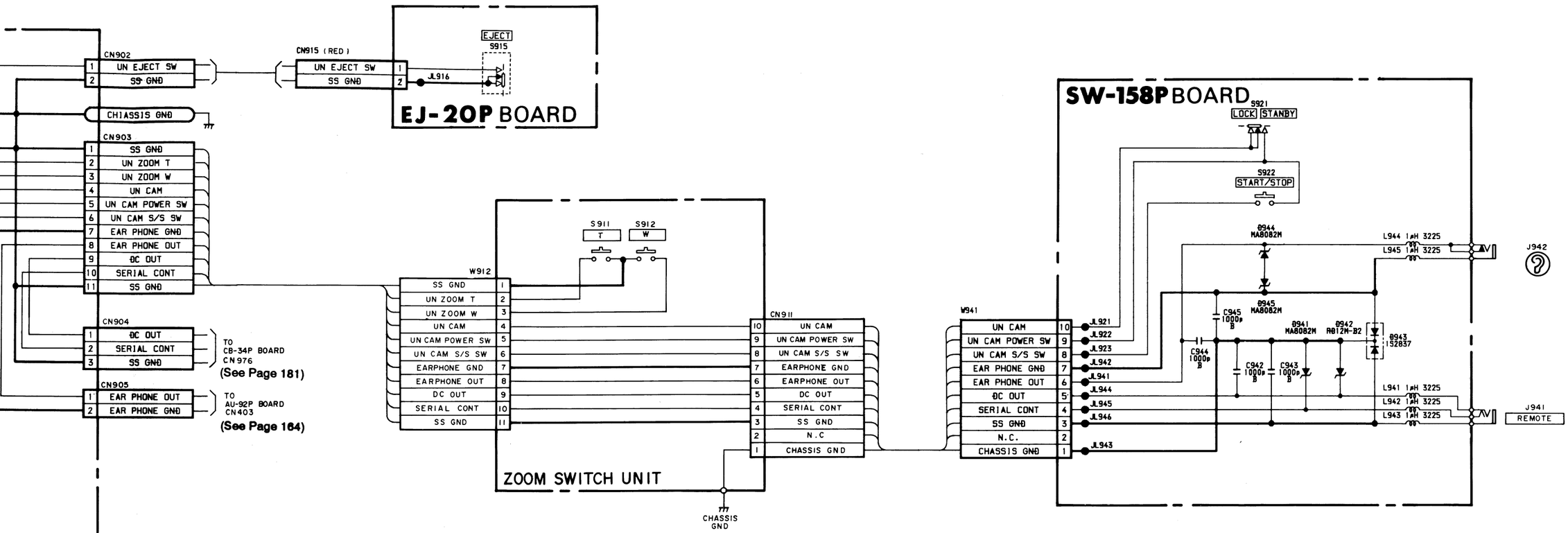
CN902
1 UN EJECT SW
2 SS GND
CHASSIS GND
CN903
1 SS GND
2 UN ZOOM T
3 UN ZOOM W
4 UN CAM
5 UN CAM POWER SW
6 UN CAM S/S SW
7 EAR PHONE GND
8 EAR PHONE OUT
9 DC OUT
10 SERIAL CONT
11 SS GND
CN904
1 DC OUT
2 SERIAL CONT
3 SS GND
TO CB-34P BOARD CN976
(See Page 181)
CN905
1 EAR PHONE OUT
2 EAR PHONE GND
TO AU-92P BOARD CN403
(See Page 164)
CN915 (RED)
UN EJECT SW 1
SS GND 2
JL916
EJECT S915
EJ-20P BOARD
S911 T
S912 W
W912
SS GND 1
UN ZOOM T 2
UN ZOOM W 3
UN CAM 4
UN CAM POWER SW 5
UN CAM S/S SW 6
EARPHONE GND 7
EARPHONE OUT 8
DC OUT 9
SERIAL CONT 10
SS GND 11
CN911
10 UN CAM
9 UN CAM POWER SW
8 UN CAM S/S SW
7 EARPHONE GND
6 EARPHONE OUT
5 DC OUT
4 SERIAL CONT
3 SS GND
2 N.C
1 CHASSIS GND
ZOOM SWITCH UNIT
CHASSIS GND
W941
UN CAM 10 JL921
UN CAM POWER SW 9 JL922
UN CAM S/S SW 8 JL923
EAR PHONE GND 7 JL942
EAR PHONE OUT 6 JL941
DC OUT 5 JL944
SERIAL CONT 4 JL945
SS GND 3 JL946
N.C. 2
CHASSIS GND 1 JL943
SW-158P BOARD
S921 LOCK STANBY
S922 START/STOP
D944 MA8082M
D945 MA8082M
D941 MA8082M
D942 RB12M-B2
D943 152837
C945 1000p B
C944 1000p B
C942 1000p B
C943 1000p B
L944 1μH 3225
L945 1μH 3225
L941 1μH 3225
L942 1μH 3225
L943 1μH 3225
J942
J941 REMOTE

CB-34P (LINK), CF-22P, CF-23P, CF-24P, CF-25P (CAMERA FUNCTION) PRINTED WIRING BOARDS

— Ref. No. CB-34P, CF-22P BOARDS: 8000, CF-23P BOARD: 7000, CF-24P BOARD: 10000, CF-25P BOARD: 9000 series —

CF-23 (P) BOARD, COMPLETE
****

< DIODE >

D751 8-719-420-15 DIODE MA8082-M
D752 8-719-420-15 DIODE MA8082-M
D755 8-719-420-41 DIODE MA123

CF-24 (P) BOARD, COMPLETE
****

< DIODE >

D771 8-719-404-40 DIODE MA121-TW
D772 8-719-420-15 DIODE MA8082-M
D773 8-719-420-15 DIODE MA8082-M
D774 8-719-420-15 DIODE MA8082-M
D779 8-719-420-15 DIODE MA8082-M

D781 8-719-420-15 DIODE MA8082-M

CF-25 (P) BOARD, COMPLETE
****

< DIODE >

D768 8-719-400-18 DIODE 1S2837

CF-25P BOARD (COMPONENT SIDE)

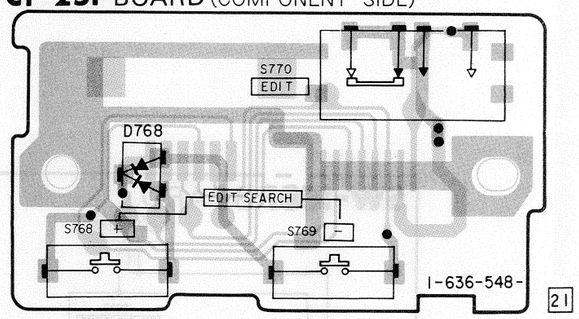

CF-25P BOARD (CONDUCTOR SIDE)

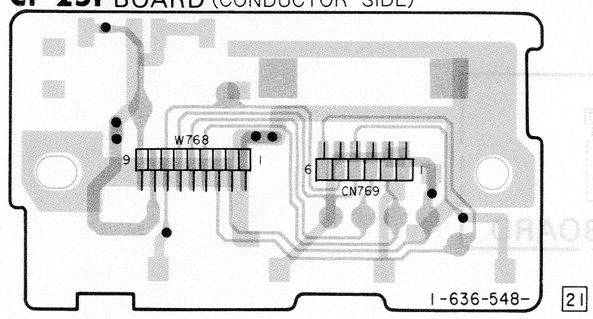

CB-34P BOARD (COMPONENT SIDE)

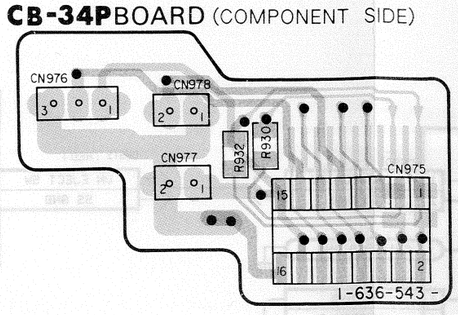

CB-34P

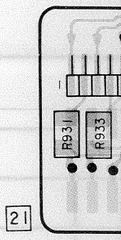

CF-23P BOARD (COMPONENT SIDE)

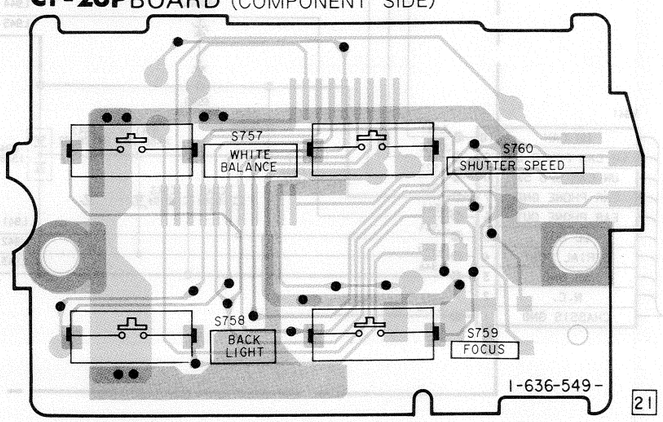

CF-23P BOARD (CONDUCTOR SIDE)

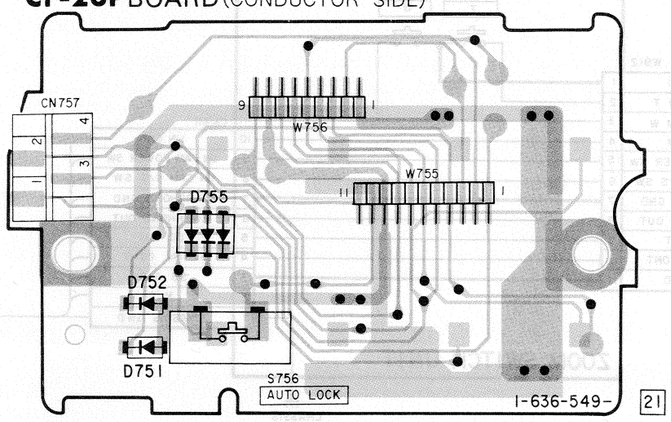

CF-24P BOARD (COMPONENT SIDE)

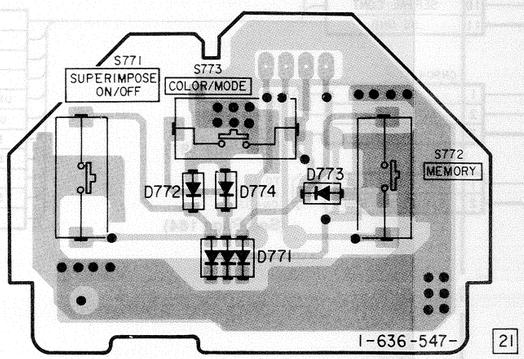

CF-24

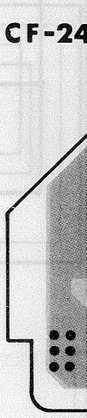

CF-22P BOARD

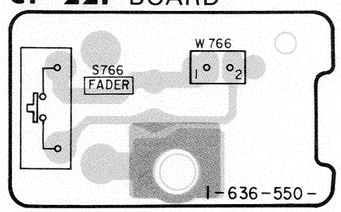

09

CF-25P BOARD (CONDUCTOR SIDE)

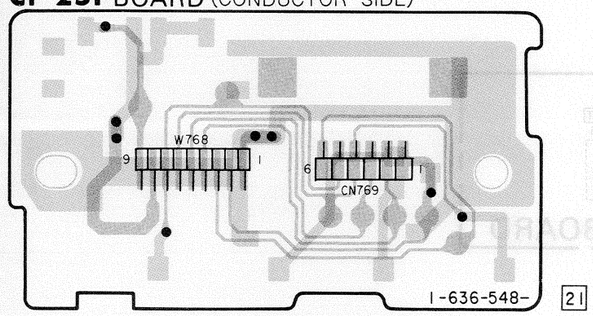

CB-34P BOARD (COMPONENT SIDE)

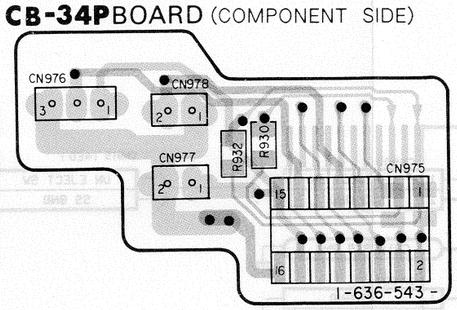

CB-34P BOARD (CONDUCTOR SIDE)

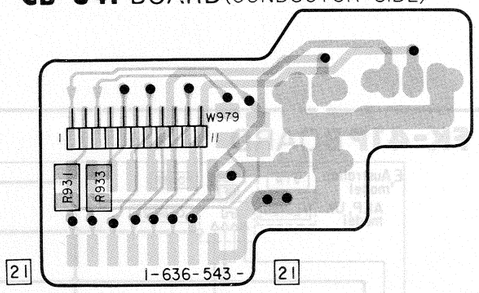

CF-23P BOARD (CONDUCTOR SIDE)

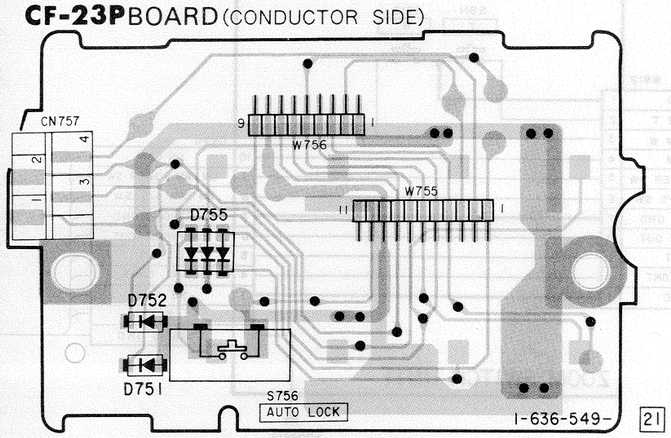

CF-24P BOARD (COMPONENT SIDE)

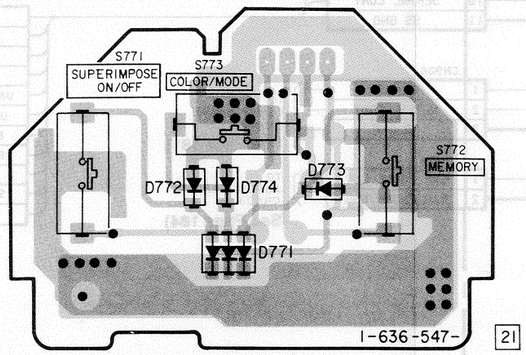

CF-24P BOARD (CONDUCTOR SIDE)

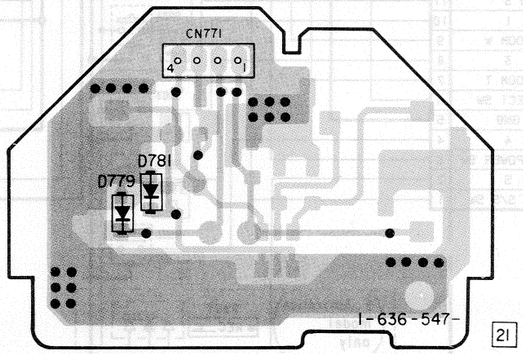

— Ref. No. CB-34P, CF-22P BOARDS: 8000, CF-23P BOARD: 7000, CF-24P BOARD: 10000, CF-25P BOARD: 9000 series —

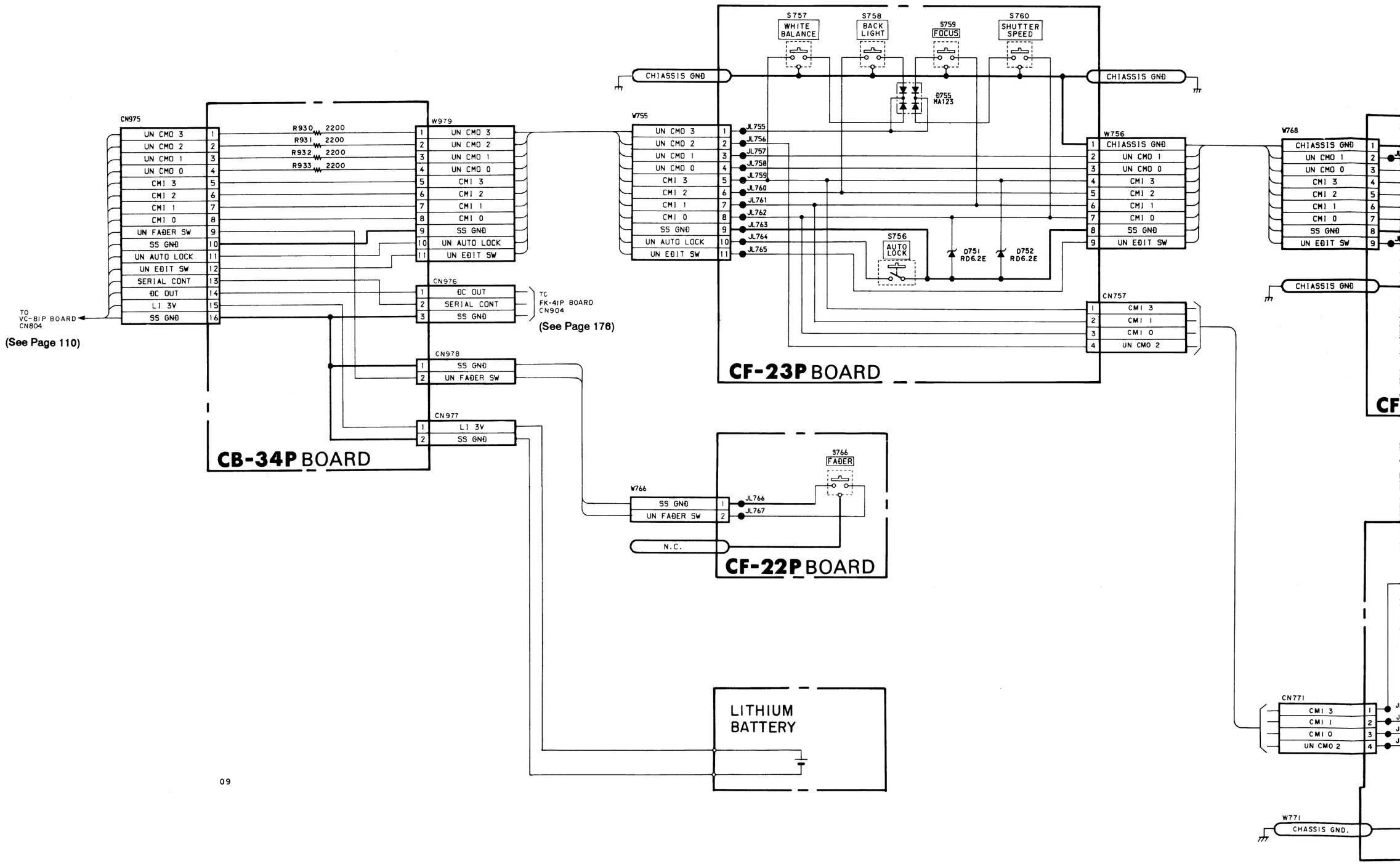

09

7 | 8 | 9 | 10 | 11 | 12 | 13 | 14 | 15 | 16 | 17 | 18 | 19 | 20 | 21 | 22

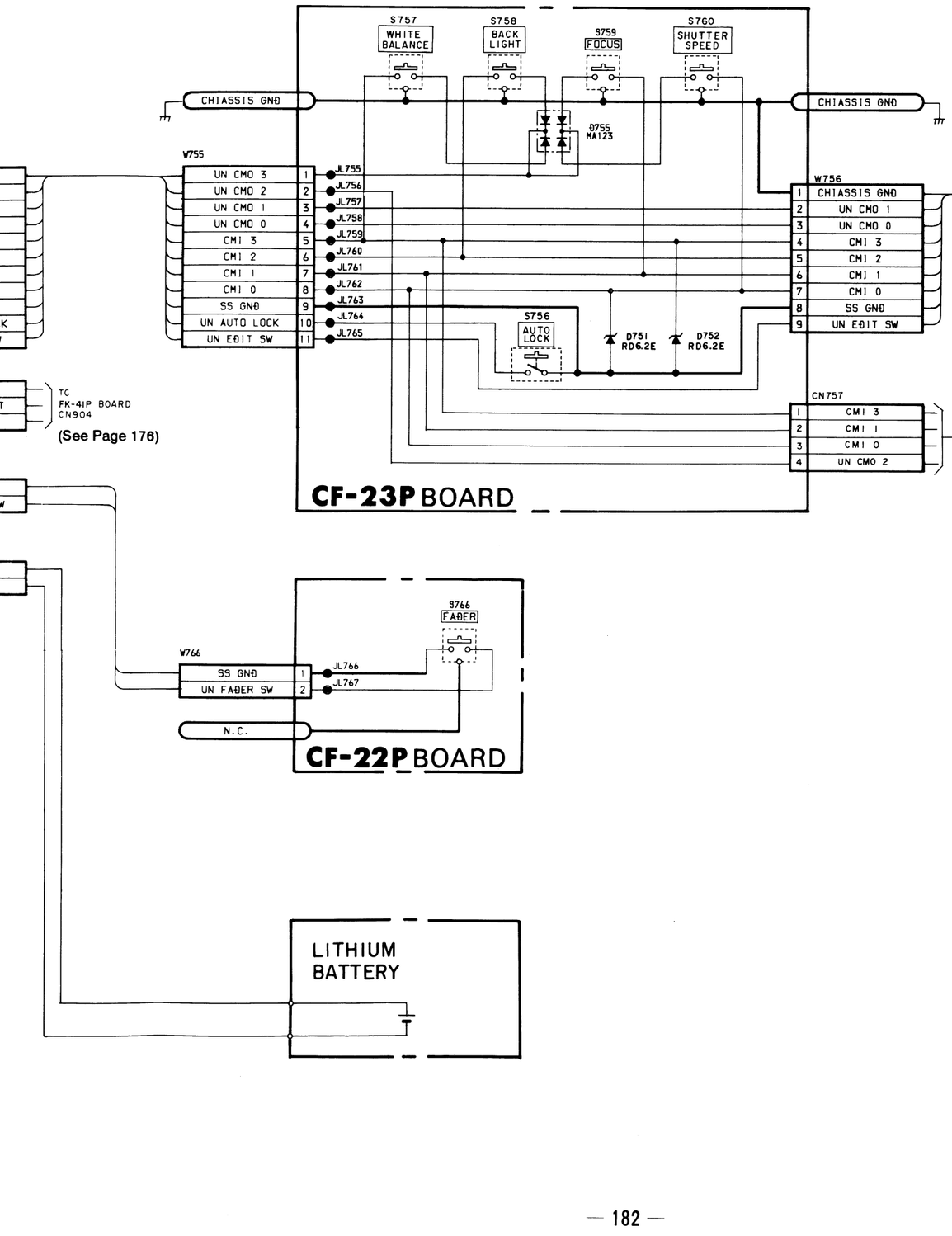

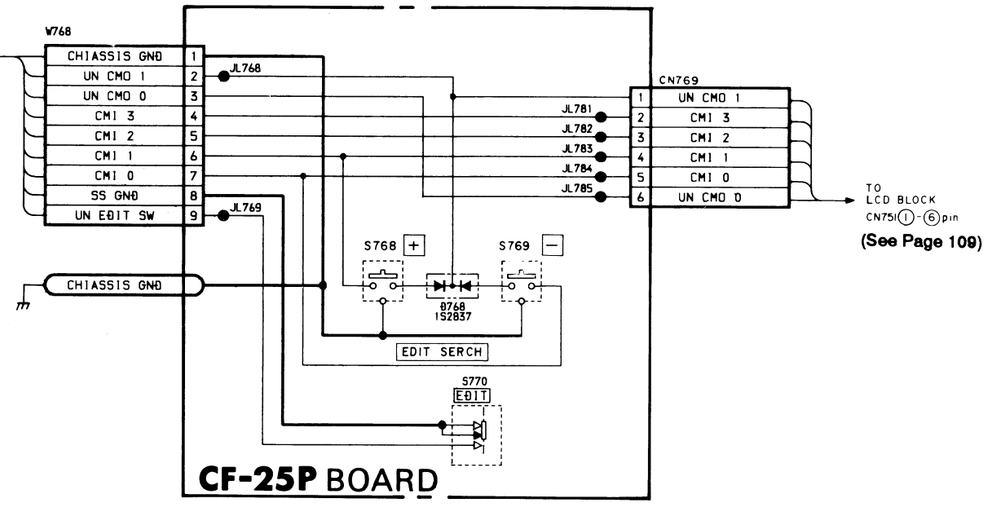

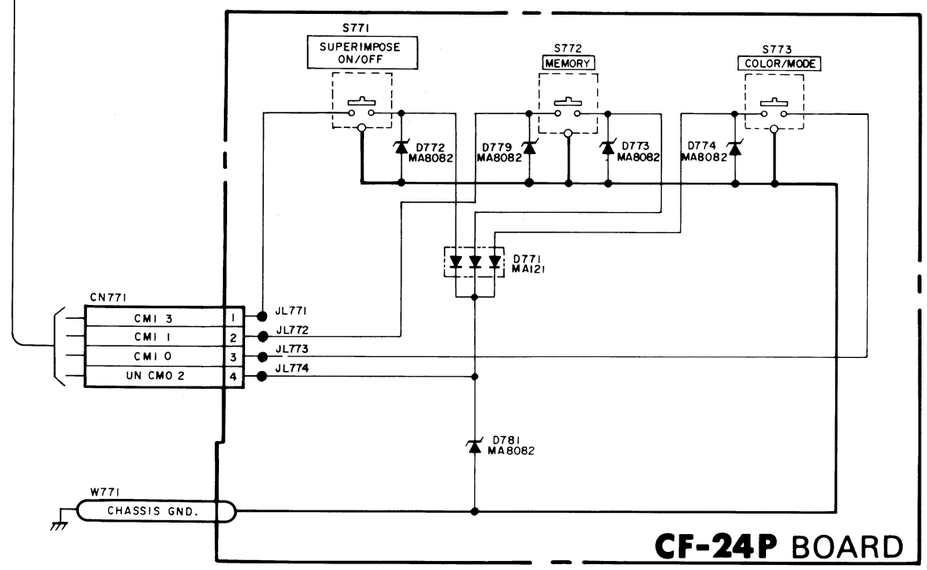

VF-41P (ELECTRICAL VIEWFINDER) PRINTED WIRING BOARD

— Ref. No. VF-41P BOARD: 3000 series —

VF-41P BOARD

D951 A-1
D952 B-6
D953 A-5
D954 C-3

IC951 D-2

Q951 B-4
Q952 D-5

VF-41 (P) BOARD, COMPLETE
****

< DIODE >

D951	8-719-820-65	DIODE TLS221
D952	8-719-800-60	LED TLR214 (RED)
D953	8-719-400-20	DIODE MA152WA
D954	8-719-420-15	DIODE MA8082-M

< IC >

IC951	8-759-420-01	IC AN2512S

< TRANSISTOR >

Q951	8-729-216-31	TRANSISTOR 2SA1163G
Q952	8-729-106-68	TRANSISTOR 2SD1615A-GP

VF-41P BOARD (COMPONENT SIDE)

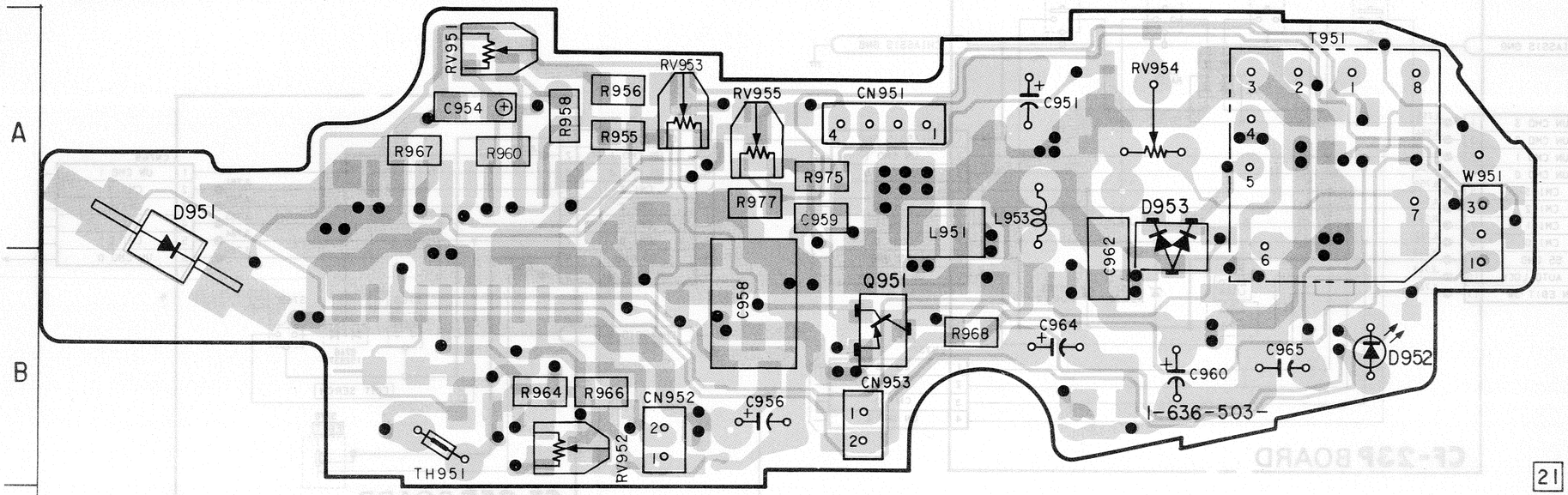

VF-41P BOARD (CONDUCTOR SIDE)

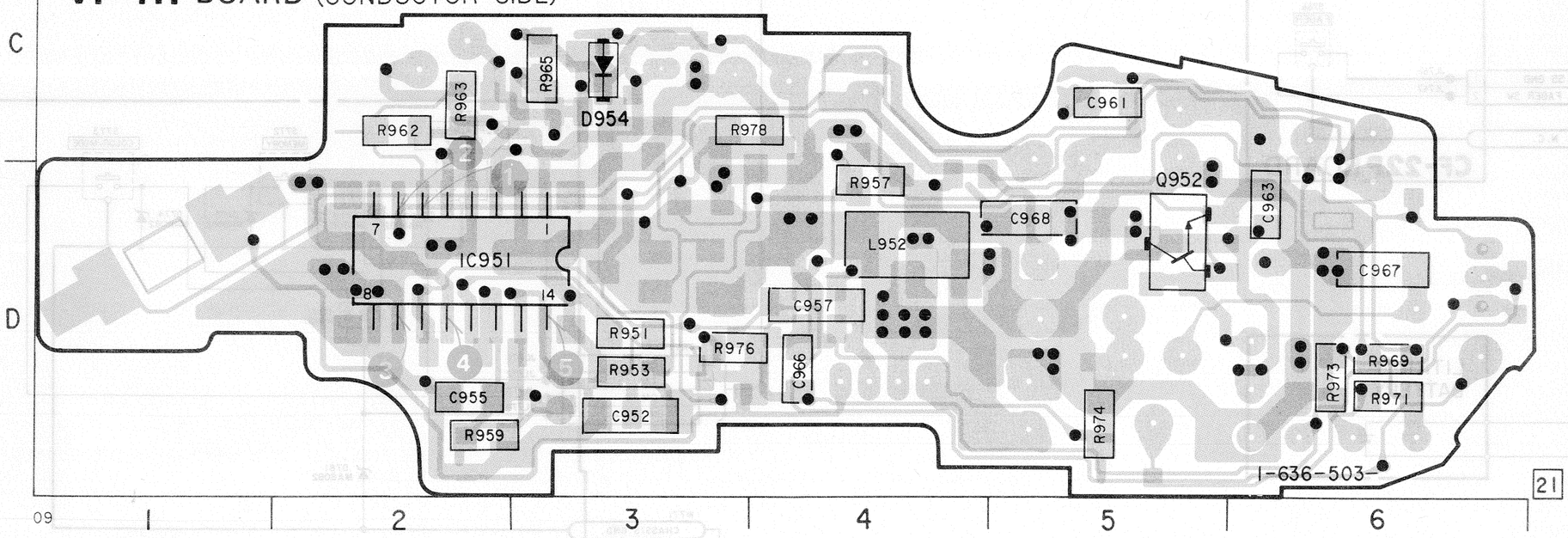

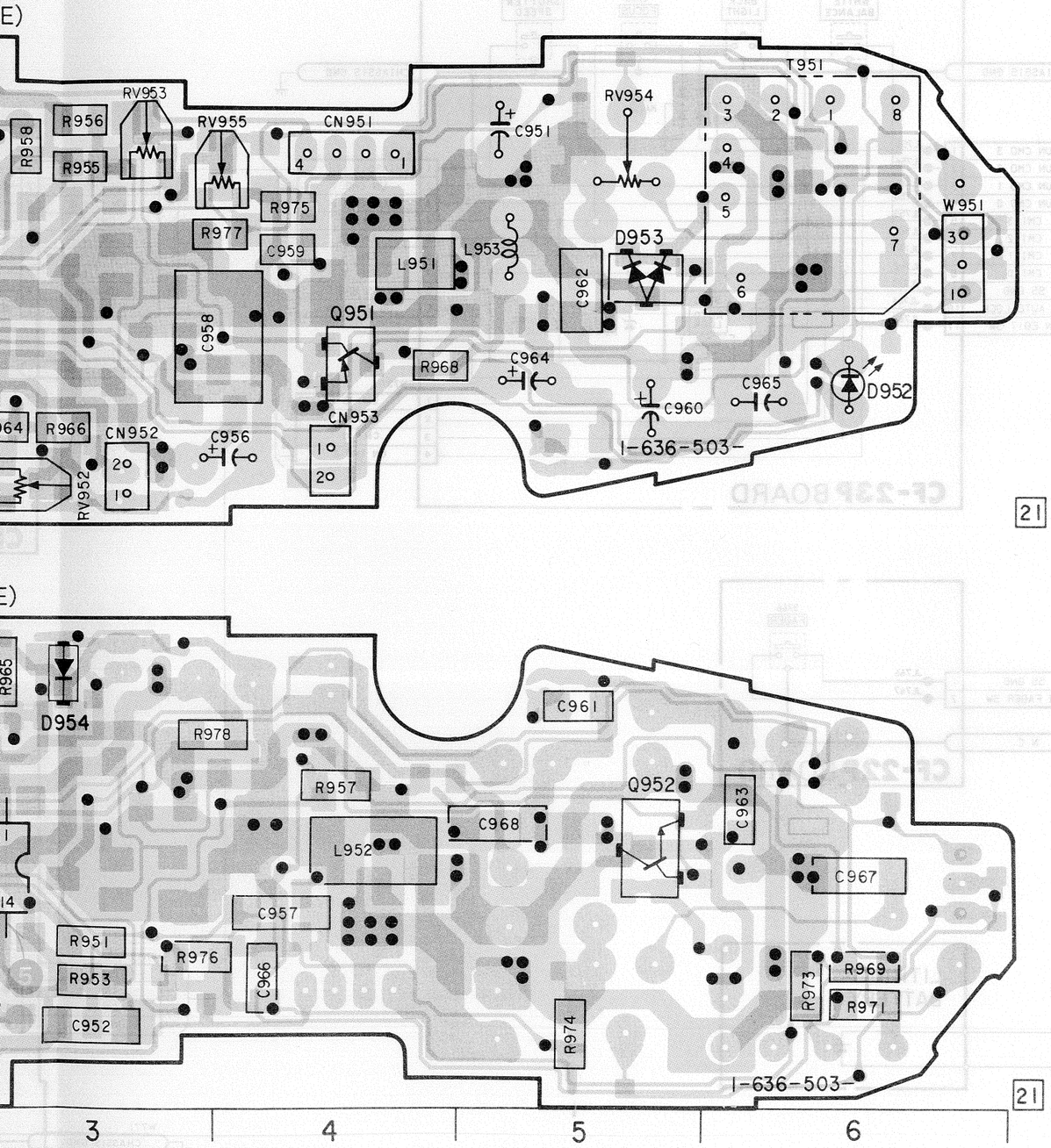
(E)
RV953
R956
R955
R958
RV955
CN951
C951
RV954
T951
R975
R977
C959
L951
L953
D953
W951
C962
C958
Q951
R968
C964
C965
D952
C960
R966
CN952
C956
CN953
RV952
1-636-503-
21
(F)
R965
D954
R978
C961
R957
Q952
C963
C968
L952
C967
C957
R951
R953
R976
C966
R973
R969
R971
C952
R974
1-636-503-
21
3
4
5
6

VF-41P BOARD

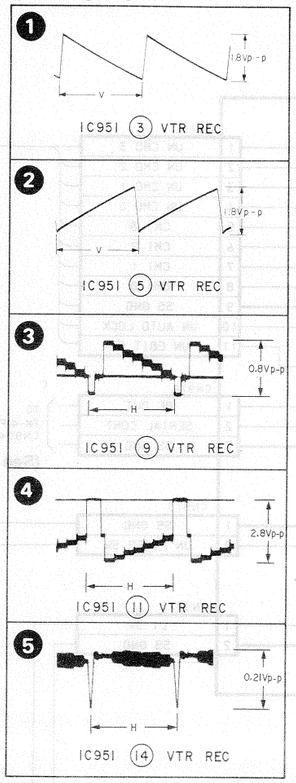
1
1.8Vp-p
V
IC951 (3) VTR REC
2
1.8Vp-p
V
IC951 (5) VTR REC
3
0.8Vp-p
H
IC951 (9) VTR REC
4
2.8Vp-p
H
IC951 (11) VTR REC
5
0.21Vp-p
H
IC951 (14) VTR REC

VF-41P (ELECTRICAL VIEWFINDER) SCHEMATIC DIAGRAM

— Ref. No. VF-41P BOARD: 3000 series —

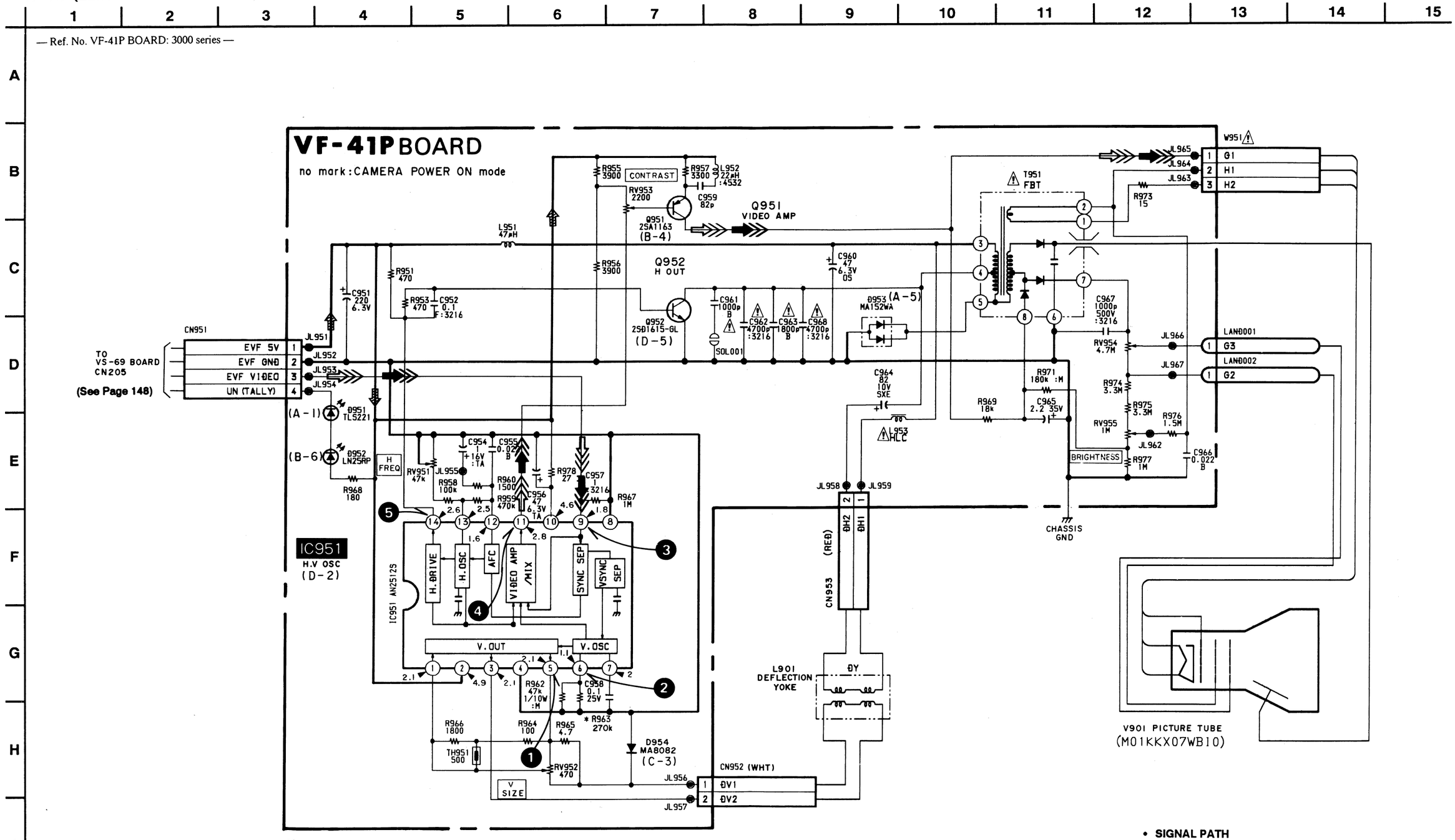

• **SIGNAL PATH**

	VIDEO SIGNAL			AUDIO SIGNAL
	CHROMA	Y	Y/CHROMA/DATA	
REC			➡	
PB			⇨	

DD-31P (BATTERY TERMINAL/DC-DC CONVERTER) PRINTED WIRING BOARD

— Ref. No. DD-31P BOARD: 3000 series —

DD-31P BOARD

D101 E-2
D102 D-8
D103 D-8
D104 A-6
D105 B-8

IC101 C-4
IC102 B-3

Q101 B-6
Q102 E-7
Q103 D-7
Q104 A-2
Q105 A-7
Q106 B-7
Q107 A-6
Q108 F-1

DD-31 (P) BOARD, COMPLETE
****

< DIODE >

D101	8-719-941-04	DIODE SB07-03C
D102	8-719-938-75	DIODE SB05-05CP
D103	8-719-951-22	DIODE IMN10
D104	8-719-941-04	DIODE SB07-03C
D105	8-719-981-59	DIODE FC805

< IC >

IC101	8-759-500-42	IC MB3783PFV
IC102	8-759-998-94	IC LM311DR

< TRANSISTOR >

Q101	8-729-421-90	TRANSISTOR XN4113
Q102	8-729-805-25	TRANSISTOR 2SB1121
Q104	8-729-119-83	TRANSISTOR 2SC4175-B3
Q105	8-729-805-25	TRANSISTOR 2SB1121
Q106	8-729-805-25	TRANSISTOR 2SB1121
Q107	8-729-805-25	TRANSISTOR 2SB1121
Q108	8-729-905-12	TRANSISTOR DTA144EU

DD-31P BOARD (COMPONENT SIDE)

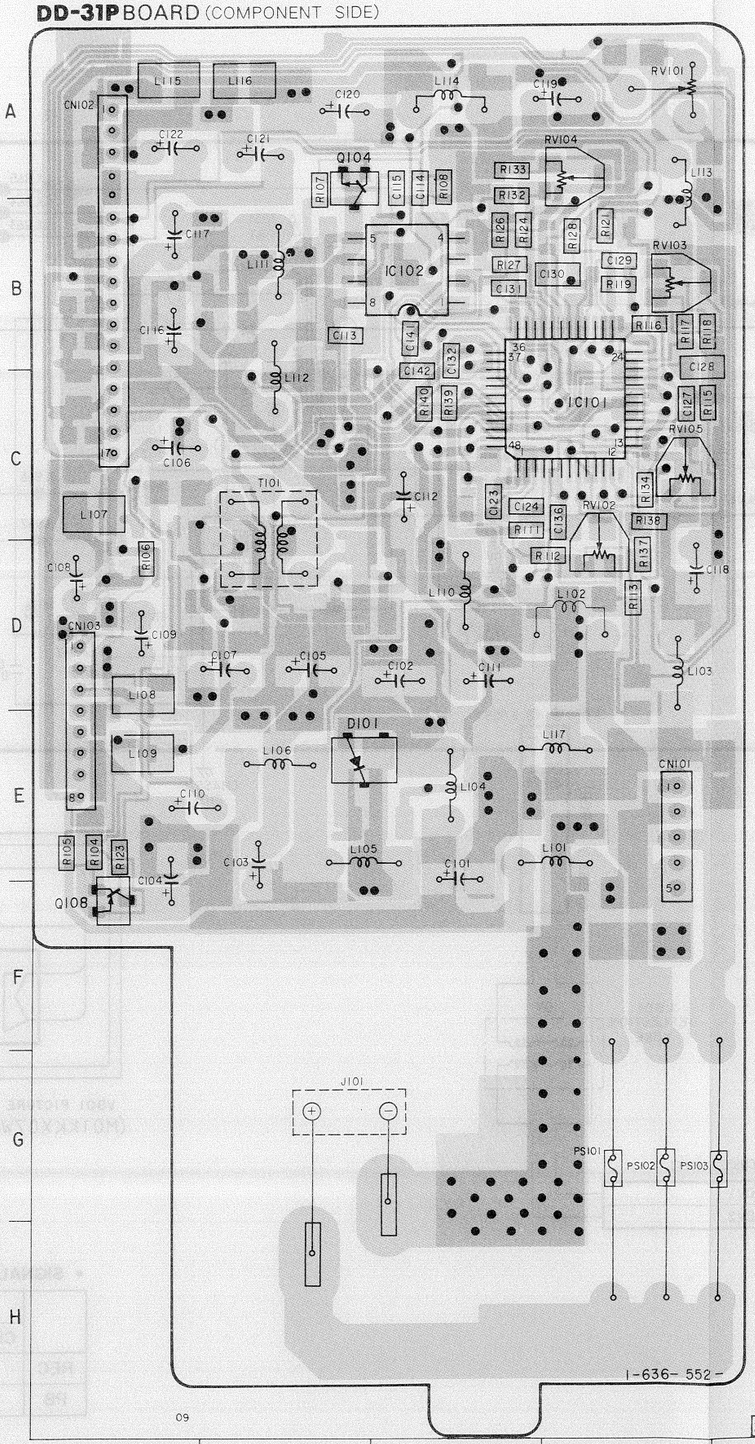

DD-31P BOARD (CONDUCTOR SIDE)

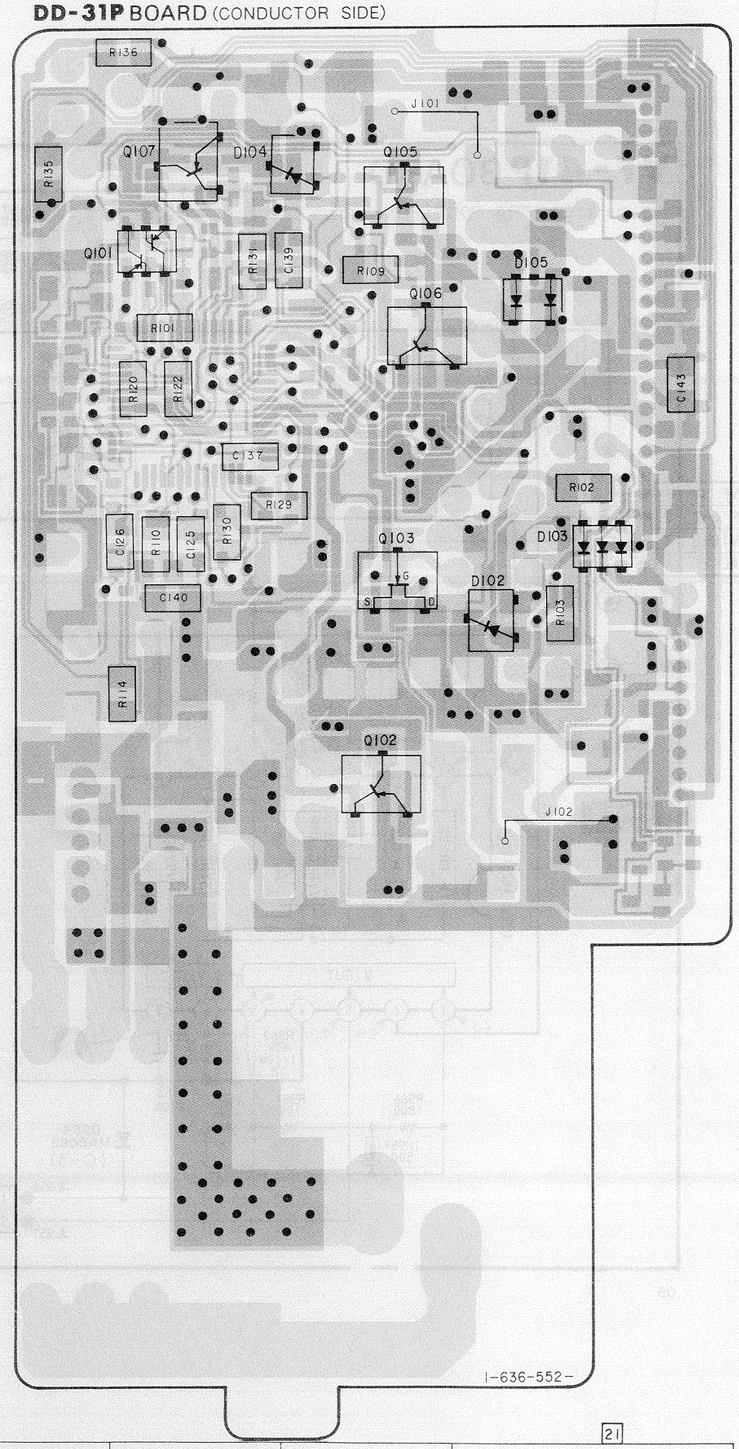

1 2 3 4 21 5 6 7 8 21

A B C D E F G H

DD-31P (BATTERY TERMINAL/DC-DC CONVERTER) SCHEMATIC DIAGRAM

— Ref. No. DD-31P BOARD: 3000 series —

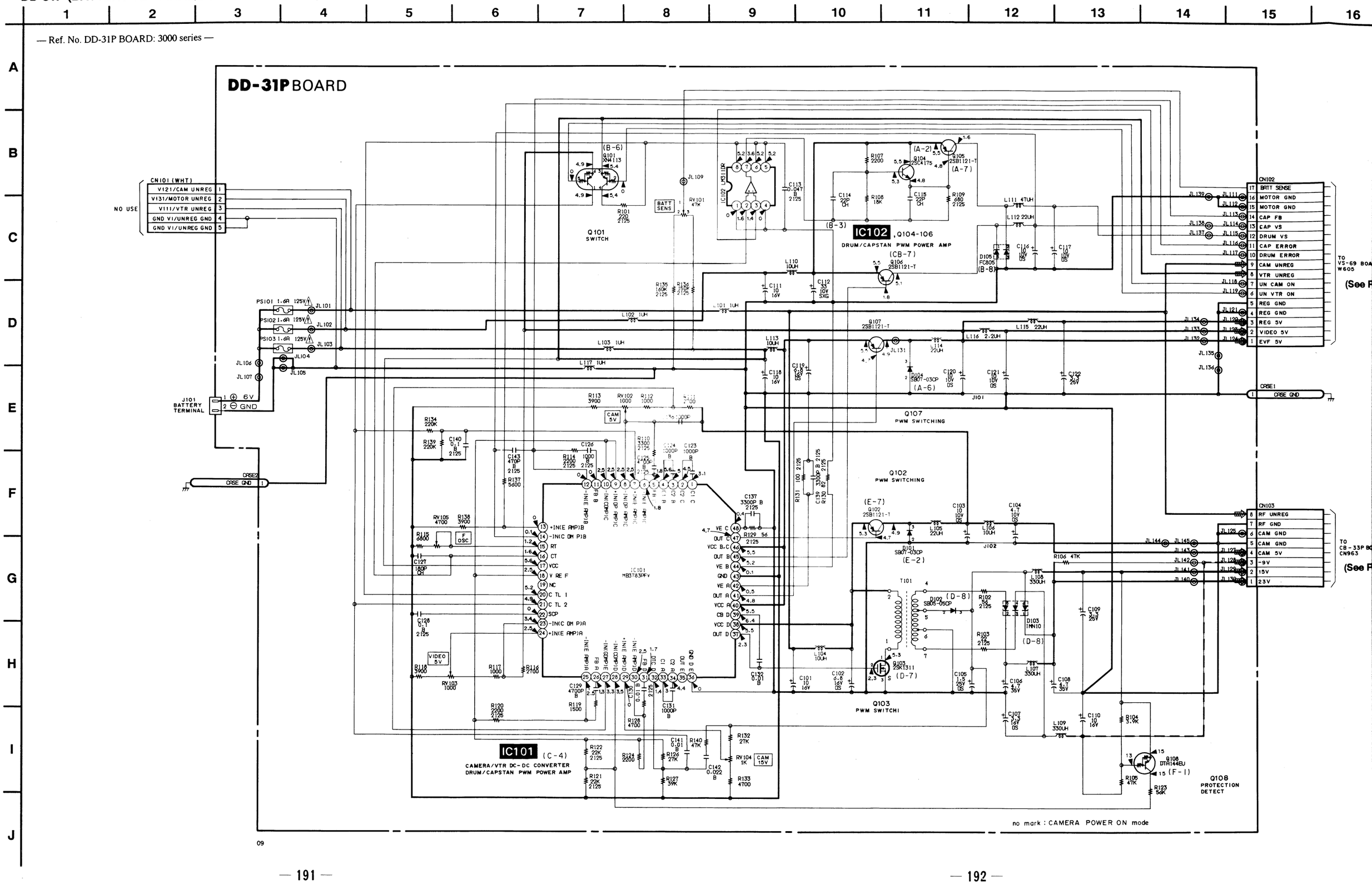

7 | 8 | 9 | 10 | 11 | 12 | 13 | 14 | 15 | 16 | 17 | 18 | 19 | 20 | 21 | 22

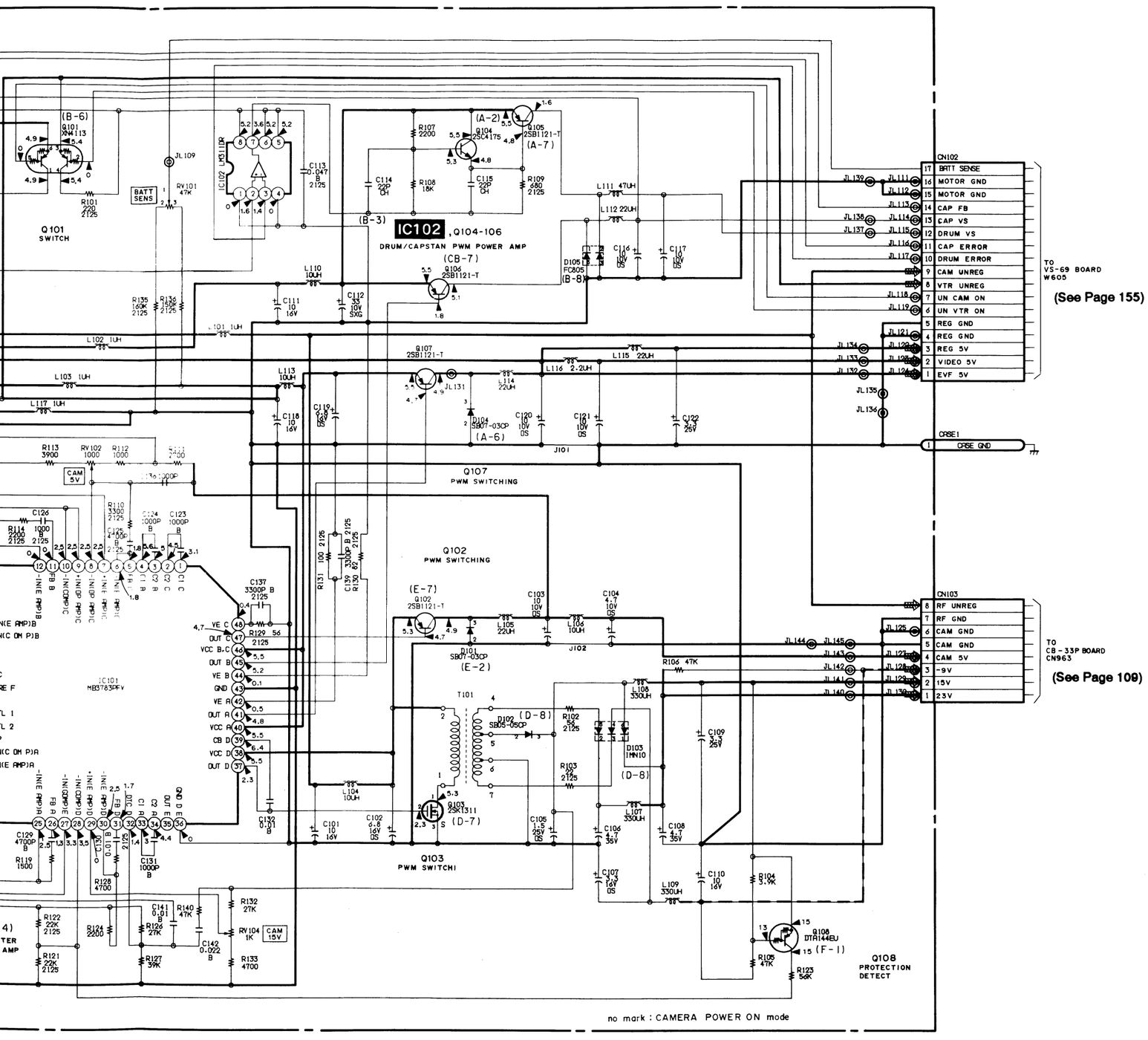

4-3. SEMICONDUCTORS

AN2512S

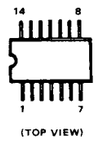

CXD1172AM

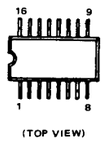

RC3414M
μPC1037GR

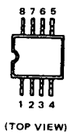

XN6401

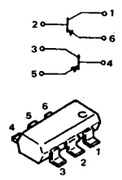

MA8082-M

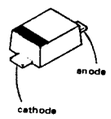

CXL1501M

CXA1047M
CXA1127M

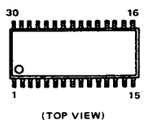

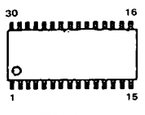

S-81350AG-REG

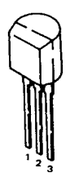

XN6215
XN6501

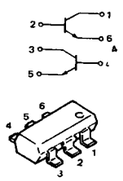

GL453

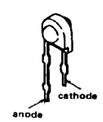

CXL1503N

CXA1200BQ
μPD7503GF-J59

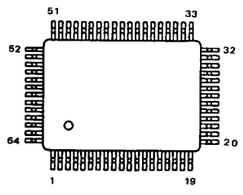

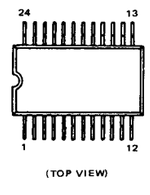

CXP80116-822Q

IMT1US
FC101
XN4113

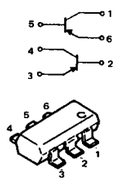

1SS283

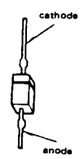

TLR214

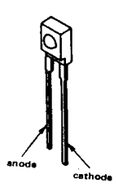

1T32

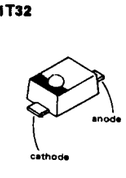

TLS221

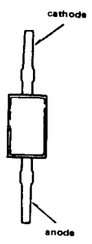

CXA1201Q

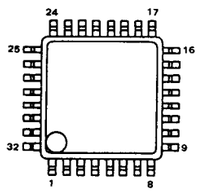

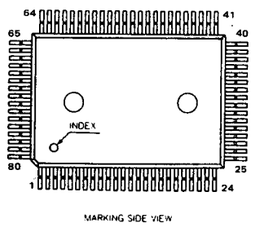

XN4210
XN4213
XN4501

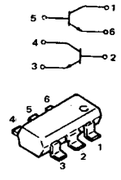

MA110
MA111

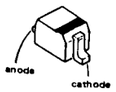

CXA1204Q

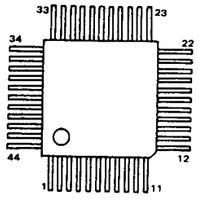

MB88341PFV
MB88346PFV
MPC1737M
μPD6145G

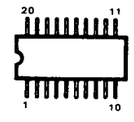

XN4601

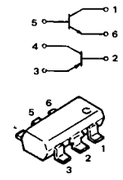

MA121

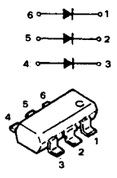

SECTION 5
EXPLODED VIEWS

NOTE:
- -XX, -X mean standardized parts, so they may have some difference from the original one.
- The construction parts of an assembled part are indicated with a collation number in the remark column.
- Items marked " * " are not stocked since they are seldom required for routine service. Some delay should be anticipated when ordering these items.
- The mechanical parts with no reference number in the exploded views are not supplied.
- Hardware (# mark) list is given in the last of this parts list.

The components identified by mark ⚠ or dotted line with mark ⚠ are critical for safety.
Replace only with part number specified.

5-1. CABINET (LEFT) BLOCK

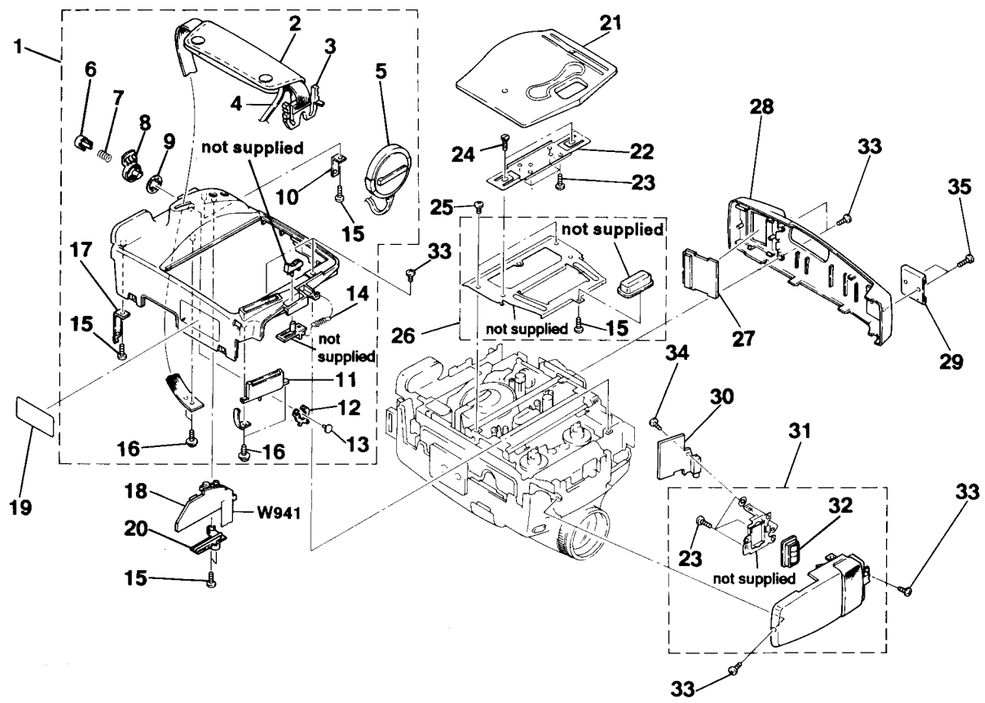

Ref. No.	Part No.	Description	Remark
1	A-7081-490-A	CABINET (L) BLOCK ASSY (AEP, UK MODEL)	
1	A-7081-369-A	CABINET (L) BLOCK ASSY (E, Australian MODEL)	
2	3-719-323-01	BELT, GRIP	
3	3-749-907-01	HOLDER (M), GRIP BELT	
4	3-941-682-01	BELT, STOPPER	
5	A-7091-015-B	CAP ASSY, LENS	
6	3-736-343-01	BUTTON, S/S	
7	3-578-221-00	SPRING, COMPRESSION	
8	3-736-391-01	KNOB, STAND-BY	
9	3-736-364-01	SPRING	
10	3-749-734-01	JOINT (B), LR	
11	*3-749-908-01	HOLDER (F), GRIP BELT	
12	3-749-745-01	HOLDER, STAND-BY KNOB	
13	3-749-732-01	PIN, S/S RELAY	
14	3-674-402-00	SPRING, TENSION	
15	3-719-408-01	SCREW (B2), TAPPING, P3	
16	3-669-480-21	+ PTPWH 2	
17	3-749-733-01	JOINT, LR	
18	*A-7071-362-A	SW-158 (P) BOARD, COMPLETE	
19	*3-941-124-01	LABEL, MODEL NUMBER (AE) (AEP MODEL)	
19	*3-941-543-01	LABEL, MODEL NUMBER (UK) (UK MODEL)	
19	*3-941-911-01	LABEL, MODEL NUMBER (E, Australian MODEL)	
20	3-749-746-01	RETAINER, SW PC BOARD	
21	X-3940-255-1	LID ASSY, CASSETTE	
22	3-749-743-01	SPRING, CASSETTE LID	
23	3-719-601-01	SCREW (B2X5), TAPPING	
24	3-749-904-02	SCREW, STEP, CASSETTE LID	
25	3-733-912-01	SCREW (M2X2.5), SPECIAL HEAD	
26	A-7091-362-A	REINFORCEMENT ASSY, LID	
27	1-809-146-11	DISPLAY BLOCK, LIQUID CRYSTAL	
28	X-3749-169-1	CABINET (T) ASSY	
29	3-724-511-01	SHOE, ACCESSORY	
30	*A-7071-363-A	MA-71 (P) BOARD, COMPLETE	
31	X-3749-166-1	CABINET (F) ASSY	
32	1-542-126-11	MICROPHONE UNIT	
33	3-719-381-01	SCREW (M2X4)	
34	3-713-786-51	SCREW (M2X3)	
35	3-719-831-01	SCREW (M2X6)	
W941	1-590-102-11	CABLE, FLAT (FFC-1)	

SECTION 5
EXPLODED VIEWS

NOTE:
- -XX, -X mean standardized parts, so they may have some difference from the original one.
- The construction parts of an assembled part are indicated with a collation number in the remark column.
- Items marked " * " are not stocked since they are seldom required for routine service. Some delay should be anticipated when ordering these items.
- The mechanical parts with no reference number in the exploded views are not supplied.
- Hardware (# mark) list is given in the last of this parts list.

The components identified by mark ⚠ or dotted line with mark ⚠ are critical for safety.
Replace only with part number specified.

5-1. CABINET (LEFT) BLOCK

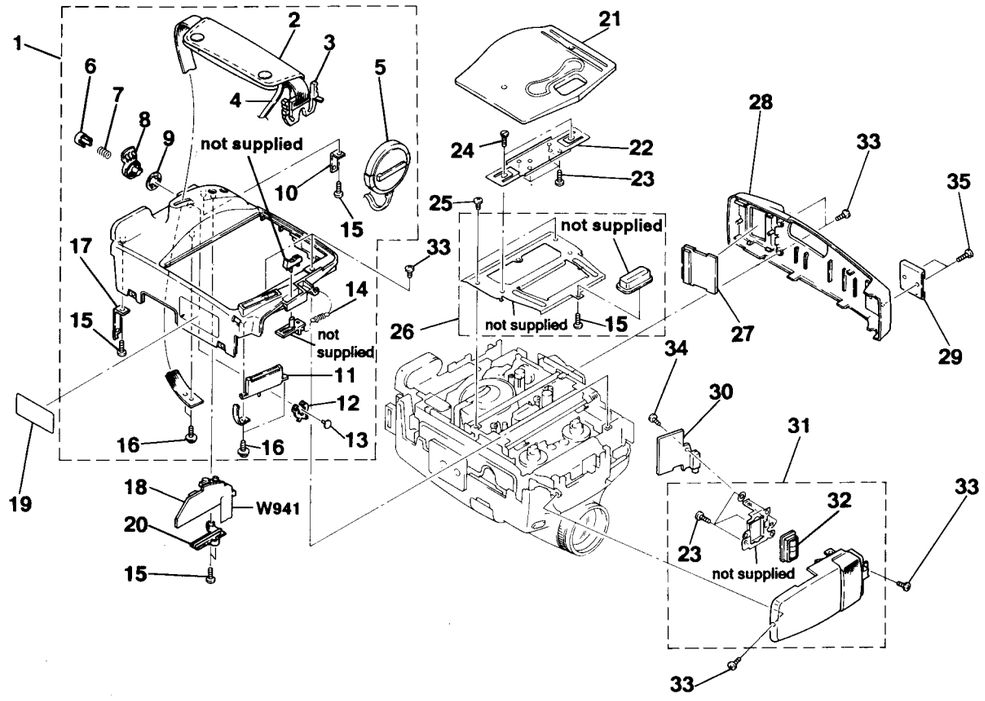

Ref. No.	Part No.	Description	Remark
1	A-7081-490-A	CABINET (L) BLOCK ASSY (AEP, UK MODEL)	
1	A-7081-369-A	CABINET (L) BLOCK ASSY (E, Australian MODEL)	
2	3-719-323-01	BELT, GRIP	
3	3-749-907-01	HOLDER (M), GRIP BELT	
4	3-941-682-01	BELT, STOPPER	
5	A-7091-015-B	CAP ASSY, LENS	
6	3-736-343-01	BUTTON, S/S	
7	3-578-221-00	SPRING, COMPRESSION	
8	3-736-391-01	KNOB, STAND-BY	
9	3-736-364-01	SPRING	
10	3-749-734-01	JOINT (B), LR	
11	*3-749-908-01	HOLDER (F), GRIP BELT	
12	3-749-745-01	HOLDER, STAND-BY KNOB	
13	3-749-732-01	PIN, S/S RELAY	
14	3-674-402-00	SPRING, TENSION	
15	3-719-408-01	SCREW (B2), TAPPING, P3	
16	3-669-480-21	+ PTPWH 2	
17	3-749-733-01	JOINT, LR	
18	*A-7071-362-A	SW-158 (P) BOARD, COMPLETE	
19	*3-941-124-01	LABEL, MODEL NUMBER (AE) (AEP MODEL)	
19	*3-941-543-01	LABEL, MODEL NUMBER (UK) (UK MODEL)	
19	*3-941-911-01	LABEL, MODEL NUMBER (E, Australian MODEL)	
20	3-749-746-01	RETAINER, SW PC BOARD	
21	X-3940-255-1	LID ASSY, CASSETTE	
22	3-749-743-01	SPRING, CASSETTE LID	
23	3-719-601-01	SCREW (B2X5), TAPPING	
24	3-749-904-02	SCREW, STEP, CASSETTE LID	
25	3-733-912-01	SCREW (M2X2.5), SPECIAL HEAD	
26	A-7091-362-A	REINFORCEMENT ASSY, LID	
27	1-809-146-11	DISPLAY BLOCK, LIQUID CRYSTAL	
28	X-3749-169-1	CABINET (T) ASSY	
29	3-724-511-01	SHOE, ACCESSORY	
30	*A-7071-363-A	MA-71 (P) BOARD, COMPLETE	
31	X-3749-166-1	CABINET (F) ASSY	
32	1-542-126-11	MICROPHONE UNIT	
33	3-719-381-01	SCREW (M2X4)	
34	3-713-786-51	SCREW (M2X3)	
35	3-719-831-01	SCREW (M2X6)	
W941	1-590-102-11	CABLE, FLAT (FFC-1)	

5-2. CABINET (RIGHT) BLOCK

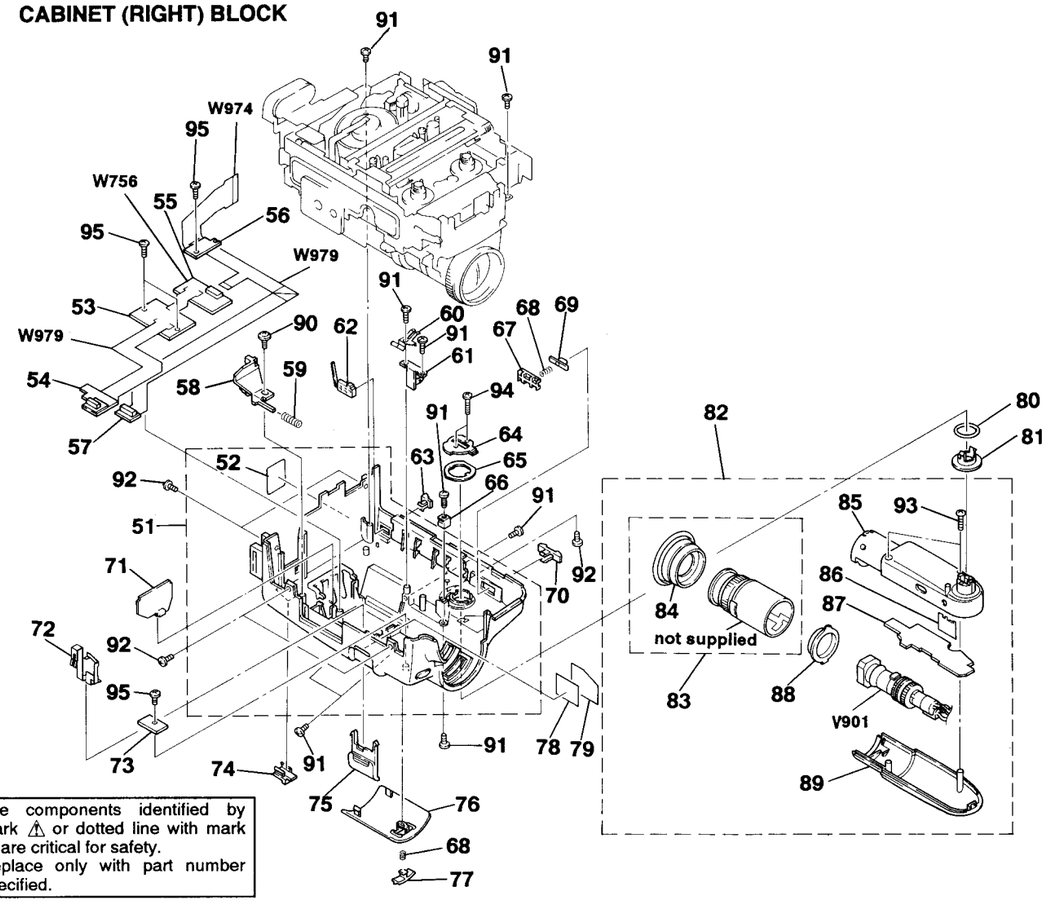

The components identified by mark ⚠ or dotted line with mark ⚠ are critical for safety.
Replace only with part number specified.

Ref. No.	Part No.	Description	Remark
51	X-3940-256-1	CABINET (R) ASSY (AEP, UK MODEL)	
51	X-3940-426-1	CABINET (R) ASSY (E, Australian MODEL)	
52	*3-719-683-01	LABEL, BATTERY FITTING	
53	*A-7071-356-A	CF-23 (P) BOARD, COMPLETE	
54	*A-7071-357-A	CB-34 (P) BOARD, COMPLETE	
55	*A-7071-359-A	CF-25 (P) BOARD, COMPLETE	
56	*A-7071-360-A	JC-10 (P) BOARD, COMPLETE	
57	*1-636-544-21	CB-35 (P) BOARD, COMPLETE	
58	3-749-770-01	LEVER, RELEASE	
59	2-226-804-00	SPRING, COMPRESSION	
60	3-749-754-01	PLATE, GROUND, LOCK	
61	X-3747-102-1	PIN ASSY, EVF LOCK	
62	3-749-771-01	HOLDER, KNOB (E, Australian MODEL)	
63	3-749-756-01	BUTTON (REC) (E, Australian MODEL)	
64	3-747-111-01	PLATE, LOCK, TILT	
65	3-747-110-01	SPRING, LEAF, TILT	
66	3-747-178-01	REINFORCEMENT, TILT LOCK	
67	3-749-769-01	HOLDER, P KNOB	
68	3-303-973-00	SPRING, COMPRESSION	
69	3-749-750-01	BUTTON, P LOCK	
70	3-749-751-01	BUTTON, POWER	
71	*A-7071-358-A	CF-24 (P) BOARD, COMPLETE	
72	1-537-295-31	TERMINAL BOARD, LITIUM	
73	*A-7071-354-A	CF-22 (P) BOARD, COMPLETE	
74	3-749-737-01	BUTTON, BATTERY RELEASE	
75	3-747-174-03	LID, BATTERY CASE, LITHIUM	
76	3-749-768-01	DOOR, AUTO LOCK	
77	3-749-738-01	BUTTON, AUTO LOCK	
78	3-940-060-01	COVER, TERMINAL BOARD	
79	3-747-157-01	SHEET (T), PROTECTION	
80	3-747-112-01	RING, TILT	
81	3-747-109-01	SLEEVE, EVF	
82	A-7019-284-A	EVF COMPLETE ASSY	
83	A-7081-256-A	HOLDER BLOCK ASSY, FINDER	
84	3-736-370-01	EYE CUP	
85	X-3747-105-1	CABINET (L) ASSY, EVF	
86	*3-941-683-02	CAP, HR	
87	*A-7062-629-A	VF-41 (P) BOARD, COMPLETE	
88	3-747-116-01	COVER, CRT	
89	3-747-149-01	CABINET (R), EVF	
90	3-669-480-21	+ PTPWH 2	
91	3-719-408-01	SCREW (B2), TAPPING, P3	
92	3-719-381-01	SCREW (M2X4)	
93	3-713-790-31	SCREW (M2X8), TAPPING, P3	
94	3-740-546-11	SCREW (M2X10.5)	
95	3-719-601-01	SCREW (B2X5), TAPPING	
V901	⚠ 1-452-566-11	CRT ASSY (M01KKX07WB10)	
W756	1-636-589-11	FP-353 BOARD	
W972	1-590-108-11	CABLE, FLAT (FFC-7)	
W974	1-590-107-11	CABLE, FLAT (FFC-6)	
W979	1-590-104-11	CABLE, FLAT (FFC-3)	

5-3. MAIN BOARD BLOCK

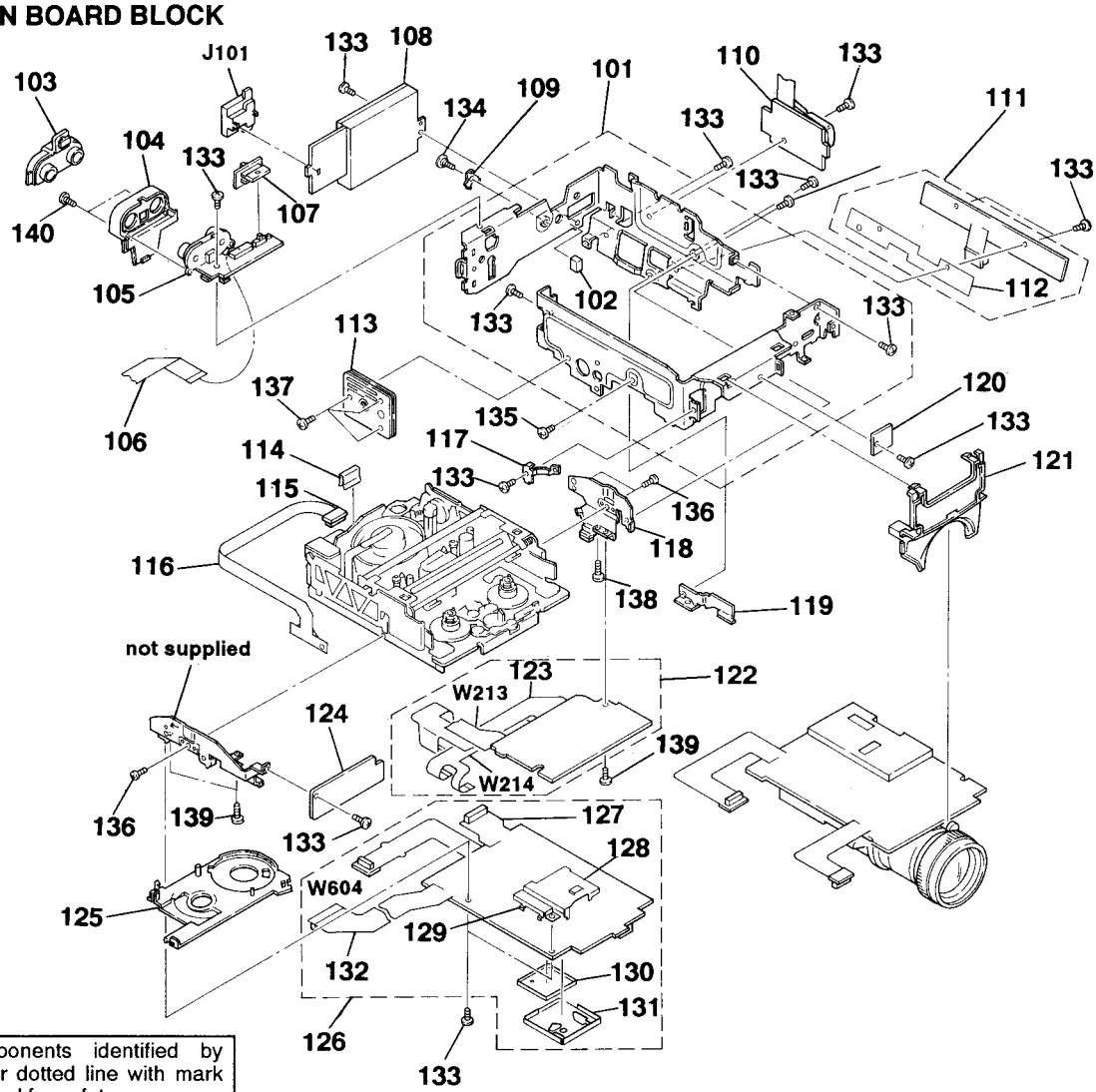

The components identified by mark ⚠ or dotted line with mark ⚠ are critical for safety.
Replace only with part number specified.

Ref. No.	Part No.	Description	Remark
101	A-7091-359-A	FRAME ASSY, U	
102	9-911-840-XX	CUSHION	
103	3-940-054-01	CAP, AV	
104	3-749-774-01	PANEL, JK	
105	1-580-327-21	JACK ASSY, PIN (AEP, UK MODEL)	
105	1-580-327-11	JACK ASSY, PIN (E, Australian MODEL)	
106	1-590-110-12	CABLE, FLAT (FFC-2)	
107	3-749-741-01	KNOB, IN OUT (E, Australian MODEL)	
108	⚠*A-7062-627-A	DD-31 (P) BOARD, COMPLETE (DC-DC CONVERTER UNIT)	
109	3-165-803-01	SPRING, LEAF, GROUND	
110	1-572-496-11	SWITCH, PUSH (POWER ZOOM)	
111	*A-7071-350-A	FK-41 (P) BOARD, COMPLETE (AEP, UK MODEL)	
111	*A-7071-391-A	FK-41 (P) BOARD, COMPLETE (E, Australian MODEL)	
112	*3-749-906-01	INSTLATOR, VTR BUTTON	
113	3-736-396-02	SCREW, TRIPOD	
114	3-941-123-01	HOLDER, FP	
115	1-569-347-11	CONNECTOR, FPC(TRANSLATION)13P	
116	1-636-498-11	PC BOARD, FP316 FLEXIBLE	
117	*3-749-752-01	BRACKET, CAP STRAP	
118	X-3749-168-1	BRACKET (R) ASSY, MD	
119	*3-747-119-01	REINFORCEMENT, LCD	
120	*A-7071-349-A	EJ-20 (P) BOARD, COMPLETE	
121	3-749-780-01	PANEL, SUB	
122	*A-7062-624-A	CC-52 (P) BOARD, COMPLETE	
123	A-7071-266-A	FP-314 BOARD, COMPLETE	
124	*A-7062-623-A	AU-92 (P) BOARD, COMPLETE	
125	3-749-775-01	COVER, MD	
126	*A-7062-622-A	VS-69 BOARD, COMPLETE	
127	1-636-501-11	FP-355 FLEXIBLE BOARD	
128	*3-736-317-01	CASE (LOWER), RP SHIELD	
129	*3-736-322-01	CASE, FE SHIELD	
130	*3-736-887-01	PLATE, SHIELD, PAL DELAY LINE	
131	*3-736-316-01	CASE (UPPER), RP SHIELD	
132	1-636-499-11	FP-363 FLEXIBLE BOARD	
133	3-713-786-51	SCREW (M2X3)	
134	3-749-905-01	SCREW (FRAME), STEP	
135	3-732-791-01	SCREW (M2X3)	
136	3-704-197-21	SCREW (M1.4X2.5), LOCKING	
137	3-719-381-01	SCREW (M2X4)	
138	3-719-408-01	SCREW (B2), TAPPING, P3	
139	3-719-601-01	SCREW (B2X5), TAPPING	
140	3-724-455-11	SCREW (M2X6)	
J101	⚠ 1-537-309-11	TERMINAL BOARD (BATTERY)	
W213	1-636-495-11	FP-312 FLEXIBLE BOARD	
W214	1-636-496-11	FP-313 FLEXIBLE BOARD	
W604	1-630-592-11	FP-184 FLEXIBLE BOARD	

5-4. CAMERA BLOCK

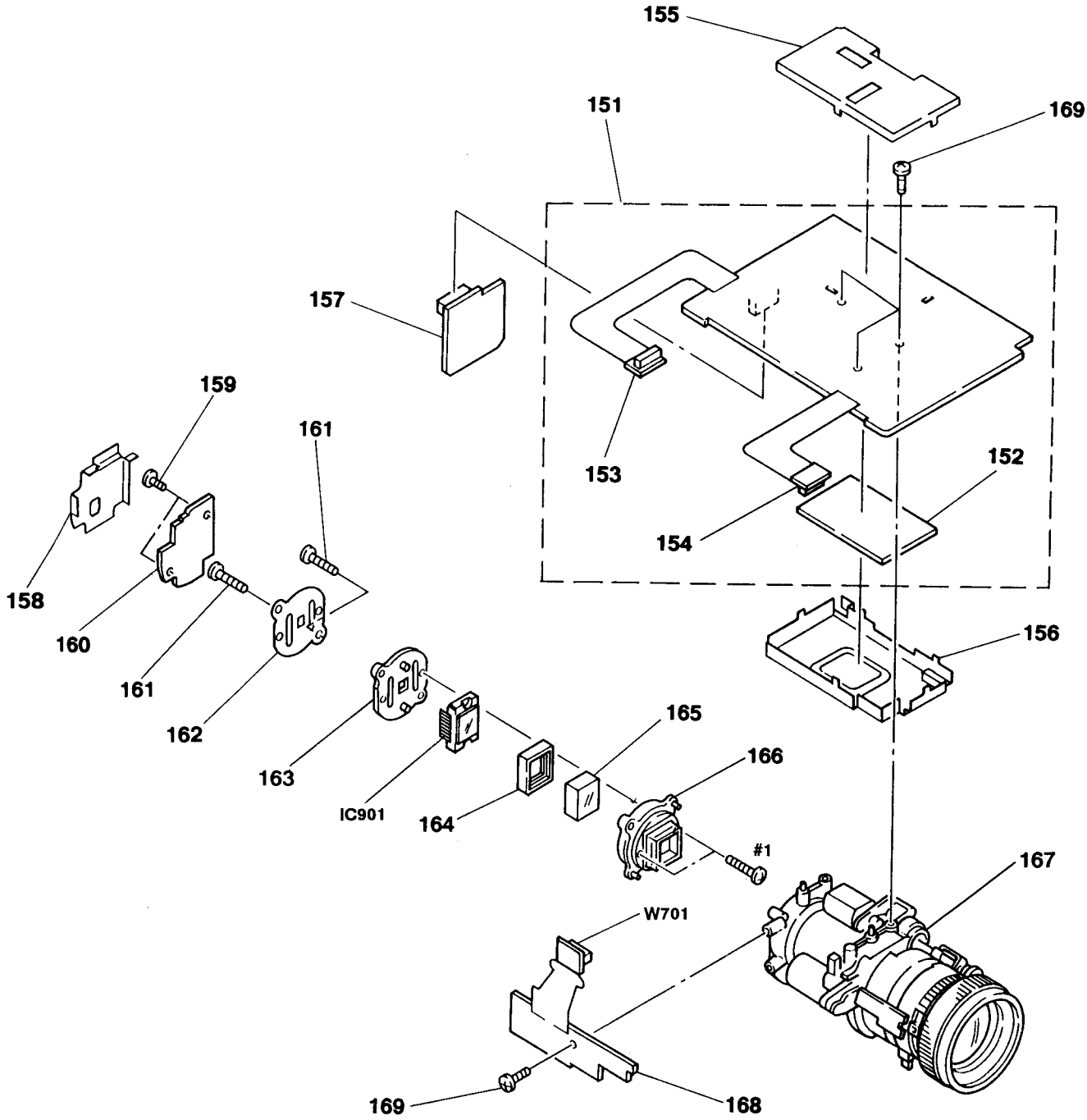

Ref. No.	Part No.	Description	Remark
151	*A-7062-626-A	VC-81 (P) BOARD, COMPLETE	
152	A-7068-189-A	DT-77LX HIC BOARD, COMPLETE	
153	*A-7071-353-A	CB-33 (P) BOARD, COMPLETE	
154	*A-7071-352-A	CB-32 (P) BOARD, COMPLETE	
155	*3-736-320-02	CASE (LOWER), VC SHIELD	
156	*3-747-166-01	CASE (UPPER), SHIELD, VC	
157	*A-7062-628-A	TI-32 (P) BOARD, COMPLETE	
158	*3-749-757-01	CASE, SHIELD, CCD	
159	3-713-786-51	SCREW (M2X3)	
160	*A-7071-351-A	CD-50 (P) BOARD, COMPLETE	
161	3-747-151-21	SCREW (2X12)	

Ref. No.	Part No.	Description	Remark
162	*3-741-525-01	SHEET, INSULATING, CCD	
163	3-941-342-01	HOLDER, CCD	
164	3-749-739-01	RUBBER, SEAL	
165	1-547-445-11	FILTER BLOCK, OPTICAL	
166	3-749-760-01	ADAPTOR, CCD FITTING	
167	1-547-461-13	LENS, ZOOM (VCL-708WA)	
168	*A-7062-625-A	LD-38 (P) BOARD, COMPLETE	
169	3-719-601-01	SCREW (B2X5), TAPPING	
IC901	8-752-606-72	IC ICX045AKA-1	
W701	1-630-595-21	FP-187 FLEXIBLE BOARD	

5-5. MD BLOCK ASSEMBLY (1)

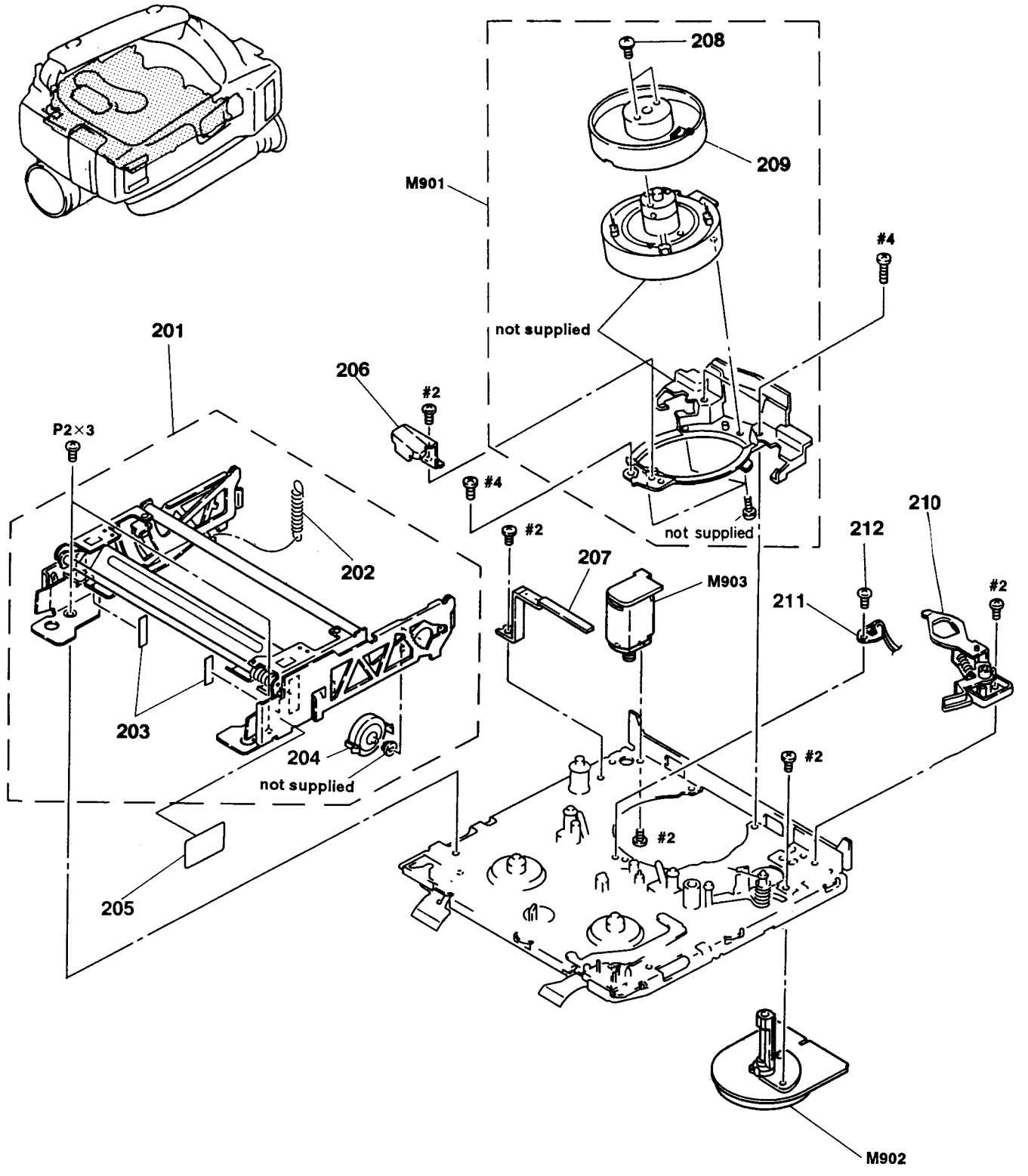

Ref. No.	Part No.	Description	Remark
201	X-3728-874-1	CASSETTE COMPARTMENT ASSY (N)	
202	3-728-825-03	SPRING, TENSION	
203	*3-728-829-01	TAPE	
204	3-728-867-02	DAMPER, OIL	
205	*3-730-176-11	SHEET, MD	
206	3-728-868-01	GUARD, GUIDE	
207	X-3728-864-1	GROUND ASSY, SHAFT	
208	3-686-493-01	SCREW (M2X5), P1	
209	A-7049-343-A	DRUM ASSY, UPPER, ROTERY (DGR-64-R)	
210	A-7040-207-A	ROLLER BLOCK ASSY, HC	
211	1-808-505-12	SENSOR	
212	3-732-087-31	SCREW (M1.4X1.8), SPECIAL HEAD	
M901	A-7048-405-A	DRUM ASSY (DGU-64A-R)	
M902	8-835-331-01	MOTOR, DC U-22A (CAPSTAN)	
M903	A-7040-208-A	MOTOR ASSY, THREADING (LOADING)	

5-6. MD BLOCK ASSEMBLY (2)

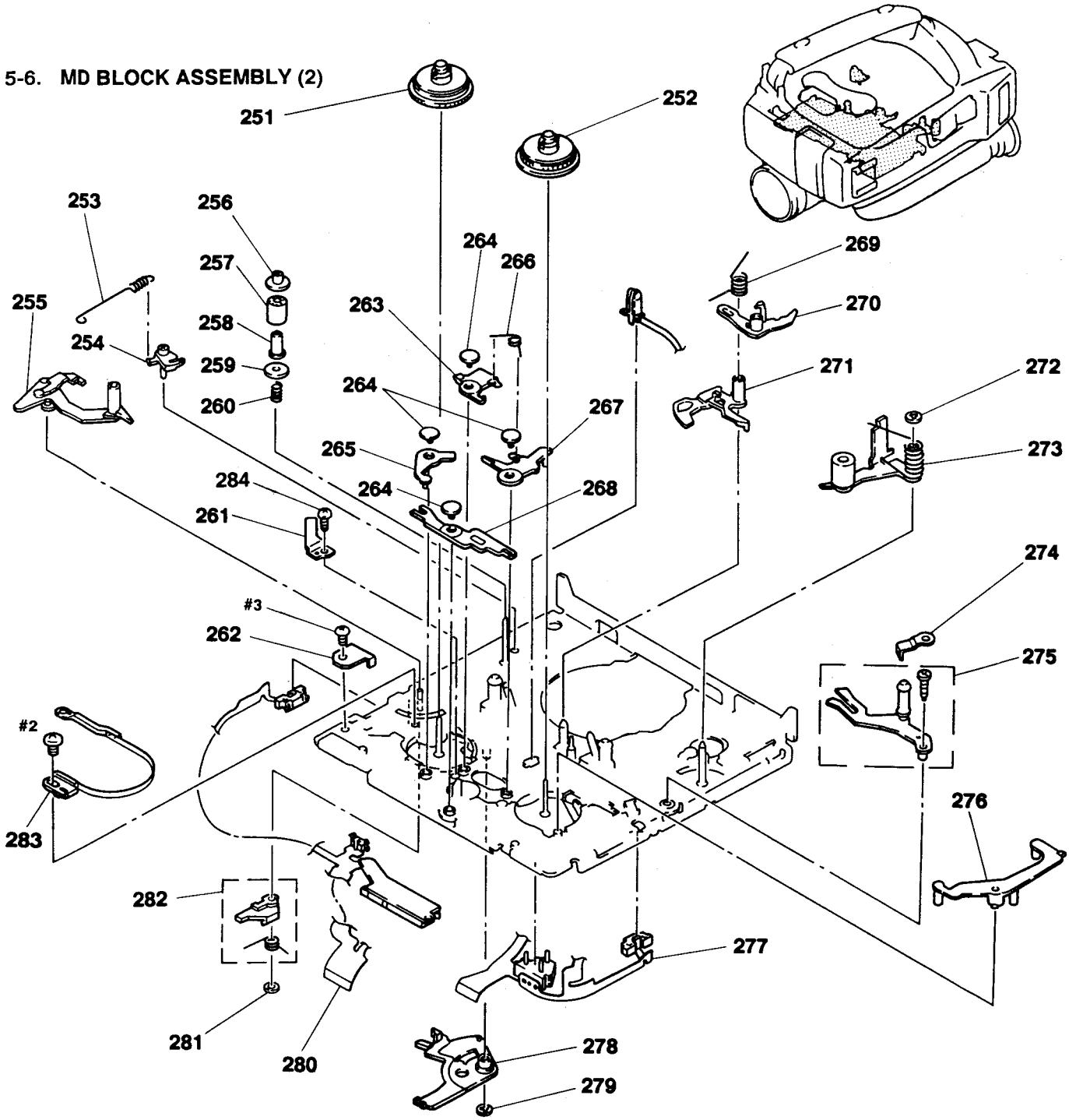

Ref. No.	Part No.	Description	Remark
251	X-3728-851-1	TABLE ASSY, REEL, S	
252	X-3728-855-1	TABLE ASSY, REEL, T	
253	3-736-414-01	SPRING, TENSION	
254	3-728-855-03	ARM, ADJUSTMENT	
255	X-3728-867-1	ARM ASSY (S), TENSION REGULATOR	
256	3-726-884-01	FLANGE, UPPER, TG2	
257	3-726-883-01	ROLLER, TG2	
258	3-726-885-01	SLEEVE, TG2	
259	3-726-882-02	FLANGE, LOWER, TG2	
260	3-726-886-01	SPRING, COMPRESSION	
261	3-726-848-01	RETAINER, TL	
262	3-730-125-01	RETAINER, SW	
263	3-728-849-01	BRAKE, S	
264	3-726-858-01	PIN, SHAFT RETAINER	
265	3-726-852-01	BRAKE, LB	
266	3-726-866-01	SPRING (ST), TORSION	
267	3-728-850-01	BRAKE, T	
268	3-726-853-01	LEVER, LB	
269	3-726-864-01	SPRING (RK), TORSION	
270	3-728-852-02	ARM, RK STOPPER	
271	3-728-875-01	STOPPER, RK	
272	3-669-465-00	WASHER (1.5), STOPPER	
273	A-7040-219-A	ARM BLOCK ASSY, PINCH	
274	3-728-808-01	SPRING, LEAF	
275	X-3728-869-1	ARM ASSY, TG7	
276	3-728-848-01	ARM, LB RELEASE	
277	1-628-061-12	PC BOARD, FP-90 FLEXIBLE	
278	X-3728-863-1	LEVER ASSY, SW	
279	3-726-829-01	WASHER, STOPPER	
280	1-628-060-12	PC BOARD, FP-89 FLEXIBLE	
281	3-321-393-11	WASHER, STOPPER	
282	X-3728-857-1	STOPPER ASSY, TENSION REGULATOR	
283	X-3728-859-1	BAND ASSY, TENSION REGULATOR	
284	3-732-087-31	SCREW (M1.4X1.8), SPECIAL HEAD	

5-7. MD BLOCK ASSEMBLY (3)

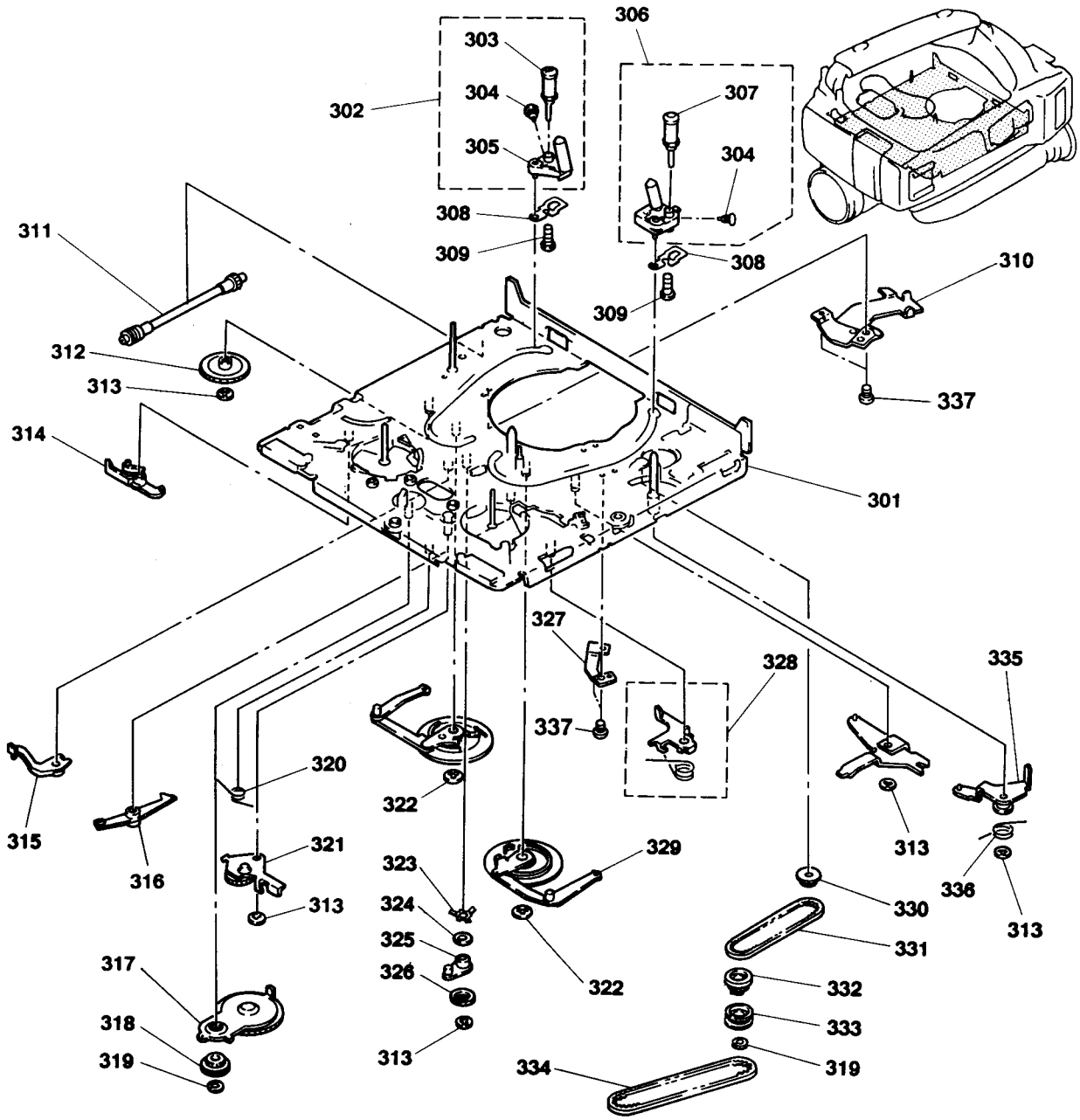

Ref. No.	Part No.	Description	Remark
301	X-3728-862-1	CHASSIS ASSY, MECHANICAL	
302	A-7040-128-A	COASTER (LEFT) BLOCK ASSY	
303	X-3726-820-1	ROLLER ASSY (U), GUIDE	
304	3-726-822-01	SCREW (M1.4X2) (STEP), HEAD	
305	X-3726-818-1	COASTER (LEFT) ASSY	
306	A-7040-216-A	COASTER (RIGHT)BLOCK ASSY(M1P)	
307	X-3728-808-4	ROLLER ASSY (U)(PLATING), GUIDE	
308	3-736-485-01	SPRING, LEAF, COSTER	
309	3-726-830-01	SCREW (M1.4X4) (THREE LOCK)	
310	X-3726-841-1	REINFORCEMENT (SS) ASSY	
311	X-3728-868-1	WORM ASSY	
312	3-744-109-01	GEAR, WHEEL	
313	3-726-829-01	WASHER, STOPPER	
314	3-728-842-01	LEVER, EJECT	
315	3-728-851-01	BRAKE, UL	
316	3-726-854-01	ARM, BRAKE RELEASE	
317	X-3728-866-1	GEAR ASSY, RK	
318	X-3728-858-1	GEAR ASSY, RC	
319	3-321-393-11	WASHER, STOPPER	
320	3-726-865-01	SPRING (LB), TORSION	
321	A-7040-225-A	GEAR BLOCK ASSY (N), LB	
322	3-669-465-00	WASHER (1.5), STOPPER	
323	3-726-867-01	SPRING, LEAF	
324	3-701-436-21	WASHER, POLYEHTHYLENE	
325	3-726-857-03	ARM, UL	
326	3-726-856-04	GEAR, UL	
327	*3-726-805-01	REINFORCEMENT (TT)	
328	X-3726-808-2	BRAKE ASSY, TS	
329	X-3728-843-1	GEAR (RIGHT) ASSY, DRIVE	
330	X-3726-805-1	GEAR ASSY, JOINT	
331	3-728-866-11	BELT (S), TIMING	
332	X-3726-813-1	PULLEY (UPPER) ASSY, MIDWAY	
333	3-741-196-01	PULLEY (LOWER), BELT MIDWAY	
334	3-741-197-01	BELT (L), TIMING	
335	X-3726-824-1	ARM ASSY, PINCH SUB	
336	3-726-895-01	SPRING	
337	3-732-087-31	SCREW (M1.4X1.8), SPECIAL HEAD	

5-8. ZOOM LENS ASSEMBLY

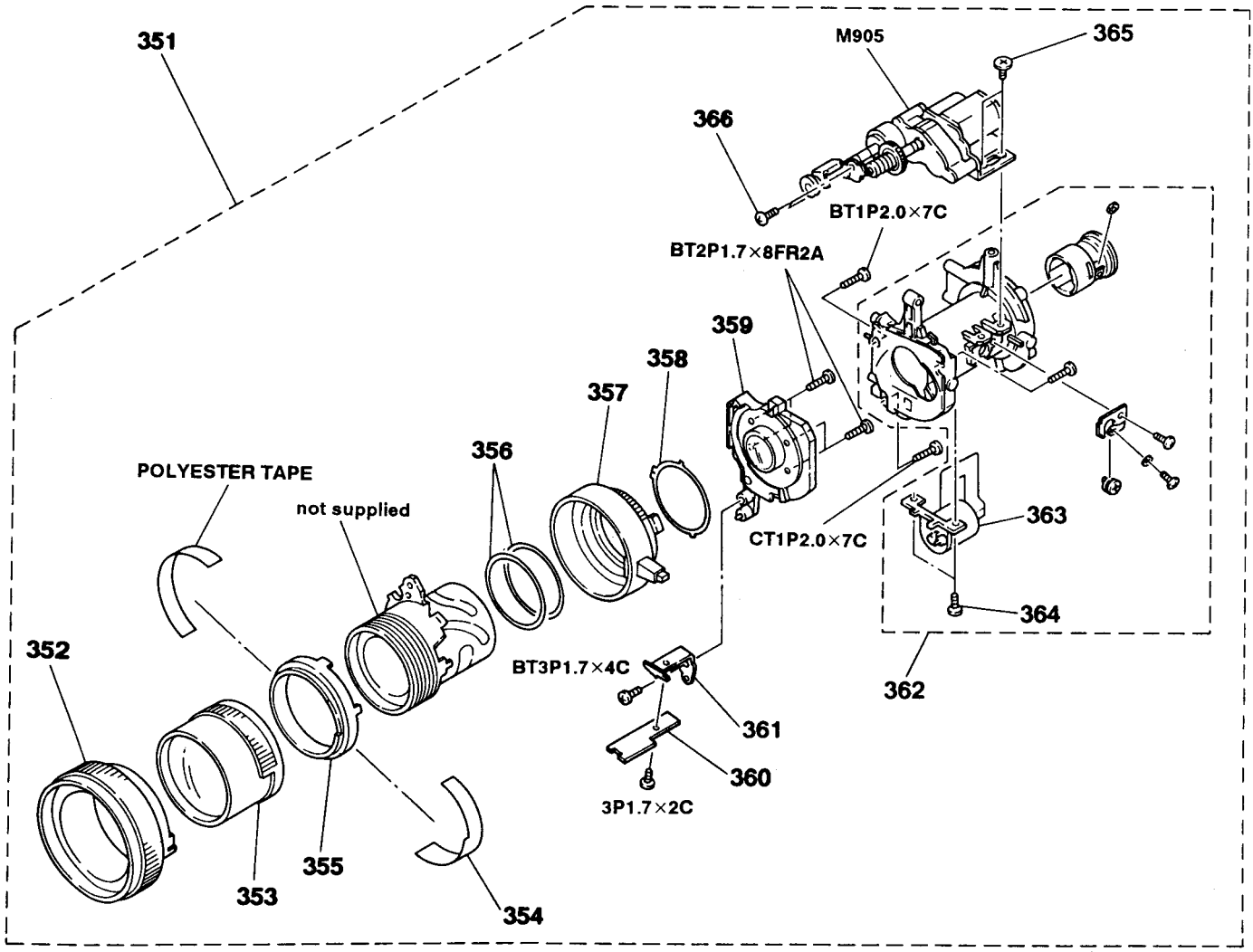

Ref. No.	Part No.	Description	Remark
351	1-547-461-13	LENS, ZOOM (VCL-708WA)	
352	3-707-740-01	RING	
353	3-708-124-01	RING UNIT (F)	
354	3-708-123-01	SEAL, FITTING (DISTANCE SCALE)	
355	3-708-122-01	RING, (F) SCALE	
356	3-707-744-01	SPRING	
357	3-708-125-01	RING ASSY, ZOOM	
358	3-707-743-01	WASHER	
359	3-708-126-01	FRAME ASSY, MIDWAY	
360	3-708-128-01	SENSOR ASSY (F)	
361	3-708-129-01	BRACKET, FITTING (F SENSOR ASSY)	
362	3-708-127-01	MIRROR TUBE ASSY, REAR	
363	3-707-660-01	METER ASSY, EE	
364	3-707-665-01	SCREW, (B) 3P 1.7X4C	
365	3-707-663-01	SCREW, FITTING	
366	3-707-666-01	SCREW, (B) 3P 1.7X2.8C	
M905	3-707-659-03	MOTOR ASSY, AF/Z GEAR (AUTO FOCUS, ZOOM)	

SECTION 6
ELECTRICAL PARTS LIST

NOTE:

The components identified by mark ⚠ or dotted line with mark ⚠ are critical for safety.
Replace only with part number specified.

When indicating parts by reference number, please include the board name.

- Due to standardization, replacements in the parts list may be different from the parts specified in the diagrams or the components used on the set.
- -XX, -X mean standardized parts, so they may have some difference from the original one.
- RESISTORS
  All resistors are in ohms
  METAL: Metal-film resistor
  METAL OXIDE: Metal Oxide-film resistor
  F : nonflammable
- Items marked "*" are not stocked since they are seldom required for routine service. Some delay should be anticipated when ordering these items.
- SEMICONDUCTORS
  In each case, u: μ , for example:
  uA...: μA..., uPA...: μPA...,
  uPB...: μPB..., uPC...: μPC...,
  uPD...: μPD...
- CAPACITORS
  uF : μF
- COILS
  uH : μH

Ref. No.	Part No.	Description			Remark
	* A-7062-623-A	AU-92 (P) BOARD, COMPLETE			
		**********			
		(Ref. No. 6000 Series)			
		< CAPACITOR >			
C421	1-126-206-11	ELECT CHIP	100uF	20% 6.3V	
C422	1-164-247-11	CERAMIC CHIP	0.047uF	10% 16V	
C423	1-135-177-21	TANTALUM CHIP	1uF	20% 20V	
C424	1-135-177-21	TANTALUM CHIP	1uF	20% 20V	
C425	1-162-969-11	CERAMIC CHIP	0.0068uF	10% 25V	
C426	1-162-970-11	CERAMIC CHIP	0.01uF	10% 25V	
C428	1-135-180-21	TANTALUM CHIP	3.3uF	20% 6.3V	
C429	1-126-205-11	ELECT CHIP	47uF	20% 6.3V	
C430	1-164-156-11	CERAMIC CHIP	0.1uF	25V	
C431	1-126-199-11	ELECT CHIP	6.8uF	20% 35V	
C432	1-126-205-11	ELECT CHIP	47uF	20% 6.3V	
C433	1-126-206-11	ELECT CHIP	100uF	20% 6.3V	
C434	1-135-177-21	TANTALUM CHIP	1uF	20% 20V	
C435	1-126-206-11	ELECT CHIP	100uF	20% 6.3V	
C436	1-162-964-11	CERAMIC CHIP	0.001uF	10% 50V	
C437	1-164-247-11	CERAMIC CHIP	0.047uF	10% 16V	
C438	1-164-156-11	CERAMIC CHIP	0.1uF	25V	
C439	1-135-149-21	TANTALUM CHIP	2.2uF	20% 10V	
C440	1-162-970-11	CERAMIC CHIP	0.01uF	10% 25V	
C441	1-162-970-11	CERAMIC CHIP	0.01uF	10% 25V	
C442	1-164-227-11	CERAMIC CHIP	0.022uF	10% 25V	
C443	1-162-957-11	CERAMIC CHIP	220PF	5% 50V	
C444	1-135-145-11	TANTALUM CHIP	0.47uF	10% 25V	
C445	1-162-965-11	CERAMIC CHIP	0.0015uF	10% 50V	
C446	1-163-016-00	CERAMIC CHIP	0.0039uF	10% 50V	
C447	1-162-957-11	CERAMIC CHIP	220PF	5% 50V	
C448	1-162-966-11	CERAMIC CHIP	0.0022uF	10% 50V	
C449	1-162-970-11	CERAMIC CHIP	0.01uF	10% 25V	
C450	1-162-910-11	CERAMIC CHIP	5PF 0.25PF	50V	
C451	1-163-133-00	CERAMIC CHIP	470PF	5% 50V	
C452	1-162-910-11	CERAMIC CHIP	5PF 0.25PF	50V	
C453	1-162-968-11	CERAMIC CHIP	0.0047uF	10% 50V	
C454	1-162-957-11	CERAMIC CHIP	220PF	5% 50V	
C455	1-162-587-11	CERAMIC CHIP	0.039uF	10% 25V	
C456	1-162-963-11	CERAMIC CHIP	680PF	10% 50V	
C457	1-163-020-00	CERAMIC CHIP	0.0082uF	10% 50V	
C458	1-135-157-21	TANTALUM CHIP	10uF	20% 6.3V	
C459	1-135-177-21	TANTALUM CHIP	1uF	20% 20V	
C460	1-135-157-21	TANTALUM CHIP	10uF	20% 6.3V	
C461	1-135-157-21	TANTALUM CHIP	10uF	20% 6.3V	
C462	1-135-149-21	TANTALUM CHIP	2.2uF	20% 10V	
C463	1-126-205-11	ELECT CHIP	47uF	20% 6.3V	
C464	1-126-205-11	ELECT CHIP	47uF	20% 6.3V	
C465	1-162-955-11	CERAMIC CHIP	150PF	5% 50V	
C466	1-162-966-11	CERAMIC CHIP	0.0022uF	10% 50V	
C467	1-162-964-11	CERAMIC CHIP	0.001uF	10% 50V	
C469	1-162-957-11	CERAMIC CHIP	220PF	5% 50V	
C470	1-162-953-11	CERAMIC CHIP	100PF	5% 50V	
C471	1-162-953-11	CERAMIC CHIP	100PF	5% 50V	
		< CONNECTOR >			
CN401	1-580-509-11	CONNECTOR, BOARD TO BOARD(P)14P			
CN402	* 1-565-875-11	PIN, CONNECTOR (PC BOARD) 3P			
CN403	1-566-757-11	PIN, CONNECTOR (PC BOARD) 2P			
		< DIODE >			
D402	8-719-420-15	DIODE MA8082-M			
		< FILTER >			
FL401	1-236-145-11	FILTER, BAND PASS			
FL401	1-236-145-11	FILTER, BAND PASS			
		< IC >			
IC401	8-752-033-01	IC CXA1237AR			
		< COIL >			
L401	1-412-032-11	INDUCTOR, CHIP 100uH			
L402	1-410-658-31	INDUCTOR, CHIP 220uH			
		< TRANSISTOR >			
Q406	8-729-117-32	TRANSISTOR 2SC4177			
Q409	8-729-117-32	TRANSISTOR 2SC4177			
Q410	8-729-117-32	TRANSISTOR 2SC4177			
Q411	8-729-905-15	TRANSISTOR DTC144WU			
Q412	8-729-905-09	TRANSISTOR DTA144WU			
Q413	8-729-117-32	TRANSISTOR 2SC4177			
Q414	8-729-905-09	TRANSISTOR DTA144WU			
Q415	8-729-821-88	TRANSISTOR 2SK1332-3			
Q416	8-729-117-32	TRANSISTOR 2SC4177			
Q417	8-729-140-63	TRANSISTOR 2SA1611-M5M6			
Q418	8-729-140-63	TRANSISTOR 2SA1611-M5M6			
Q419	8-729-117-32	TRANSISTOR 2SC4177			
		< RESISTOR >			
R421	1-216-841-11	METAL CHIP	47K	5% 1/1 6W	
R422	1-216-826-11	METAL CHIP	2.7K	5% 1/1 6W	
R423	1-216-821-11	METAL CHIP	1K	5% 1/1 6W	
R424	1-216-821-11	METAL CHIP	1K	5% 1/1 6W	
R425	1-216-825-11	METAL CHIP	2.2K	5% 1/1 6W	
R426	1-216-825-11	METAL CHIP	2.2K	5% 1/1 6W	
R430	1-216-849-11	METAL CHIP	220K	5% 1/1 6W	
R431	1-216-853-11	METAL CHIP	470K	5% 1/1 6W	
R432	1-216-827-11	METAL CHIP	3.3K	5% 1/1 6W	
R433	1-216-827-11	METAL CHIP	3.3K	5% 1/1 6W	

Ref. No.	Part No.	Description			Remark
R434	1-216-825-11	METAL CHIP	2.2K	5% 1/16W	
R435	1-216-833-11	METAL CHIP	10K	5% 1/16W	
R436	1-216-838-11	METAL CHIP	27K	5% 1/16W	
R437	1-216-835-11	METAL CHIP	15K	5% 1/16W	
R438	1-216-825-11	METAL CHIP	2.2K	5% 1/16W	
R439	1-216-826-11	METAL CHIP	2.7K	5% 1/16W	
R440	1-216-833-11	METAL CHIP	10K	5% 1/16W	
R441	1-216-831-11	METAL CHIP	6.8K	5% 1/16W	
R442	1-216-833-11	METAL CHIP	10K	5% 1/16W	
R443	1-216-801-11	METAL CHIP	22	5% 1/16W	
R444	1-216-832-11	METAL CHIP	8.2K	5% 1/16W	
R445	1-216-851-11	METAL CHIP	330K	5% 1/16W	
R446	1-216-843-11	METAL CHIP	68K	5% 1/16W	
R447	1-216-841-11	METAL CHIP	47K	5% 1/16W	
R448	1-216-825-11	METAL CHIP	2.2K	5% 1/16W	
R449	1-216-837-11	METAL CHIP	22K	5% 1/16W	
R450	1-216-829-11	METAL CHIP	4.7K	5% 1/16W	
R451	1-216-829-11	METAL CHIP	4.7K	5% 1/16W	
R452	1-216-829-11	METAL CHIP	4.7K	5% 1/16W	
R453	1-216-649-11	METAL CHIP	820	0.5% 1/10W	
R454	1-216-649-11	METAL CHIP	820	0.5% 1/10W	
R455	1-216-828-11	METAL CHIP	3.9K	5% 1/16W	
R456	1-216-834-11	METAL CHIP	12K	5% 1/16W	
R457	1-216-825-11	METAL CHIP	2.2K	5% 1/16W	
R458	1-216-819-11	METAL CHIP	680	5% 1/16W	
R459	1-216-826-11	METAL CHIP	2.7K	5% 1/16W	
R460	1-216-826-11	METAL CHIP	2.7K	5% 1/16W	
R461	1-216-827-11	METAL CHIP	3.3K	5% 1/16W	
R462	1-216-827-11	METAL CHIP	3.3K	5% 1/16W	
R463	1-216-833-11	METAL CHIP	10K	5% 1/16W	
R464	1-216-836-11	METAL CHIP	18K	5% 1/16W	
R465	1-216-836-11	METAL CHIP	18K	5% 1/16W	
R466	1-216-835-11	METAL CHIP	15K	5% 1/16W	
R467	1-216-832-11	METAL CHIP	8.2K	5% 1/16W	
R468	1-216-821-11	METAL CHIP	1K	5% 1/16W	
R469	1-216-820-11	METAL CHIP	820	5% 1/16W	
R470	1-216-814-11	METAL CHIP	270	5% 1/16W	
R471	1-216-810-11	METAL CHIP	120	5% 1/16W	
R472	1-216-822-11	METAL CHIP	1.2K	5% 1/16W	
R473	1-216-045-00	METAL CHIP	680	5% 1/10W	
R474	1-216-041-00	METAL CHIP	470	5% 1/10W	
R475	1-216-817-11	METAL CHIP	470	5% 1/16W	
		< VARIABLE RESISTOR >			
RV401	1-238-090-11	RES, ADJ CERMET 10K			
RV402	1-238-091-11	RES, ADJ CERMET 22K			

****

Ref. No.	Part No.	Description	Remark
	* A-7071-352-A	CB-32 (P) BOARD, COMPLETE	
		**********	
		(Ref. No. 2000 Series)	
		< CONNECTOR >	
CN961	1-568-326-11	CONNECTOR, BOARD TO BOARD 7P	
		< FLAT CABLE >	
W962	1-590-105-11	CABLE, FLAT (FFC-4)	

****

	* A-7071-353-A	CB-33 (P) BOARD, COMPLETE	
		**********	
		(Ref. No. 1000 Series)	
		< CONNECTOR >	
CN963	1-568-327-11	CONNECTOR, BOARD TO BOARD 8P	
		< FLAT CABLE >	
W964	1-590-106-11	CABLE, FLAT (FFC-5)	

****

	* A-7071-357-A	CB-34 (P) BOARD, COMPLETE	
		**********	
		(Ref. No. 8000 Series)	
		< CONNECTOR >	
CN975	1-568-334-11	CONNECTOR, BOARD TO BOARD 16P	
CN976	* 1-565-875-11	PIN, CONNECTOR (PC BOARD) 3P	
CN977	1-566-757-11	PIN, CONNECTOR (PC BOARD) 2P	
CN978	1-566-757-11	PIN, CONNECTOR (PC BOARD) 2P	
		< RESISTER >	
R930	1-216-057-00	METAL CHIP 2.2K 5% 1/10W	
R931	1-216-057-00	METAL CHIP 2.2K 5% 1/10W	
R932	1-216-057-00	METAL CHIP 2.2K 5% 1/10W	
R933	1-216-057-00	METAL CHIP 2.2K 5% 1/10W	
		< FLAT CABLE >	
W979	1-590-104-11	CABLE, FLAT (FFC-3)	

****

	* 1-636-544-21	CB-35 (P) BOARD, COMPLETE	
		**********	
		(Ref. No. 6000 Series)	
		< CONNECTOR >	
CN971	1-568-335-11	CONNECTOR, BOARD TO BOARD 18P	

When indicating parts by reference number, please include the board name.

Ref. No.	Part No.	Description			Remark
**********					
	* A-7062-624-A	CC-52 (P) BOARD, COMPLETE			
		**********			
		(Ref. No. 7000 Series)			
	1-569-346-11	CONNECTOR, FPC(TRANSLATION)10P			
		< CAPACITOR >			
C201	1-163-086-00	CERAMIC CHIP	3PF	50V	
C202	1-164-232-11	CERAMIC CHIP	0.01uF	50V	
C203	1-163-033-00	CERAMIC CHIP	0.022uF	50V	
C204	1-164-232-11	CERAMIC CHIP	0.01uF	50V	
C205	1-164-232-11	CERAMIC CHIP	0.01uF	50V	
C206	1-163-131-00	CERAMIC CHIP	390PF 5%	50V	
C207	1-164-232-11	CERAMIC CHIP	0.01uF	50V	
C208	1-163-038-00	CERAMIC CHIP	0.1uF	25V	
C209	1-163-109-00	CERAMIC CHIP	47PF 5%	50V	
C210	1-164-182-11	CERAMIC CHIP	0.0033uF 10%	50V	
C211	1-163-038-00	CERAMIC CHIP	0.1uF	25V	
C212	1-164-232-11	CERAMIC CHIP	0.01uF	50V	
C213	1-163-038-00	CERAMIC CHIP	0.1uF	25V	
C214	1-135-157-21	TANTALUM CHIP	10uF 20%	6.3V	
C290	1-164-634-11	CERAMIC CHIP	1uF	16V	
C291	1-164-634-11	CERAMIC CHIP	1uF	16V	
C292	1-164-634-11	CERAMIC CHIP	1uF	16V	
		< CONNECTOR >			
CN211	1-566-545-41	CONNECTOR, FPC (NON ZIF) 13P			
CN212	1-566-543-31	CONNECTOR, FPC (NON ZIF) 11P			
CN217	1-569-286-11	CONNECTOR, CARD EDGE 5P			
		< DIODE >			
D201	8-719-800-76	DIODE 1SS226			
		< FILTER >			
FL201	1-236-188-11	FILTER, BAND PASS			
FL201	1-236-188-11	FILTER, BAND PASS			
FL202	1-415-664-11	DELAY LINE, ULTRASONIC 2H			
		< COIL >			
L201	1-410-383-31	INDUCTOR CHIP 15uH			
L202	1-410-385-11	INDUCTOR CHIP 22uH			
L203	1-412-029-11	INDUCTOR CHIP 10uH			
		< TRANSISTOR >			
Q201	8-729-100-66	TRANSISTOR 2SC1623			
Q202	8-729-100-66	TRANSISTOR 2SC1623			
Q203	8-729-100-66	TRANSISTOR 2SC1623			
Q204	8-729-100-66	TRANSISTOR 2SC1623			
Q205	8-729-100-66	TRANSISTOR 2SC1623			
Q206	8-729-100-66	TRANSISTOR 2SC1623			
Q207	8-729-100-66	TRANSISTOR 2SC1623			
Q208	8-729-100-66	TRANSISTOR 2SC1623			
		< RESISTOR >			
R201	1-216-049-00	METAL CHIP	1K 5%	1/10W	
R202	1-216-049-00	METAL CHIP	1K 5%	1/10W	
R203	1-216-077-00	METAL CHIP	15K 5%	1/10W	
R204	1-216-041-00	METAL CHIP	470 5%	1/10W	
R205	1-216-033-00	METAL CHIP	220 5%	1/10W	
R206	1-216-049-00	METAL CHIP	1K 5%	1/10W	
R207	1-216-057-00	METAL CHIP	2.2K 5%	1/10W	
R208	1-216-073-00	METAL CHIP	10K 5%	1/10W	
R209	1-216-065-00	METAL CHIP	4.7K 5%	1/10W	
R210	1-216-039-00	METAL CHIP	390 5%	1/10W	
R211	1-216-047-00	METAL CHIP	820 5%	1/10W	
R212	1-216-059-00	METAL CHIP	2.7K 5%	1/10W	
R213	1-216-041-00	METAL CHIP	470 5%	1/10W	
R214	1-216-053-00	METAL CHIP	1.5K 5%	1/10W	
R215	1-216-085-00	METAL CHIP	33K 5%	1/10W	
R216	1-216-081-00	METAL CHIP	22K 5%	1/10W	
R217	1-216-041-00	METAL CHIP	470 5%	1/10W	
R218	1-216-043-00	METAL CHIP	560 5%	1/10W	
R219	1-216-027-00	METAL CHIP	120 5%	1/10W	
R220	1-216-061-00	METAL CHIP	3.3K 5%	1/10W	
R221	1-216-073-00	METAL CHIP	10K 5%	1/10W	
R222	1-216-047-00	METAL CHIP	820 5%	1/10W	
R223	1-216-037-00	METAL CHIP	330 5%	1/10W	
R224	1-216-047-00	METAL CHIP	820 5%	1/10W	
R225	1-216-037-00	METAL CHIP	330 5%	1/10W	
R226	1-216-085-00	METAL CHIP	33K 5%	1/10W	
R227	1-216-077-00	METAL CHIP	15K 5%	1/10W	
R228	1-216-065-00	METAL CHIP	4.7K 5%	1/10W	
R229	1-216-079-00	METAL CHIP	18K 5%	1/10W	
R276	1-216-295-00	METAL CHIP	0 5%	1/10W	
R282	1-216-295-00	METAL CHIP	0 5%	1/10W	
R290	1-216-061-00	METAL CHIP	3.3K 5%	1/10W	
R291	1-216-085-00	METAL CHIP	33K 5%	1/10W	
R292	1-216-085-00	METAL CHIP	33K 5%	1/10W	
R293	1-216-061-00	METAL CHIP	3.3K 5%	1/10W	
R296	1-216-041-00	METAL CHIP	470 5%	1/10W	
		< VARIABLE RESISTOR >			
RV201	1-238-089-11	RES, ADJ CERMET 4.7K			
		< FLEXIBLE BOARD >			
W213	1-636-495-11	FP312 FLEXIBLE BOARD			
W214	1-636-496-11	FP313 FLEXIBLE BOARD			

When indicating parts by reference number, please include the board name.

Ref. No.	Part No.	Description			Remark
**********					
	* A-7071-351-A	CD-50 (P) BOARD, COMPLETE			
		**********			
					(Ref. No. 4000 Series)
		< CAPACITOR >			
C902	1-135-155-21	TANTALUM CHIP	4.7uF	10% 10V	
C903	1-135-159-21	TANTALUM CHIP	10uF	10% 16V	
C904	1-164-232-11	CERAMIC CHIP	0.01uF	50V	
C905	1-135-162-21	TANTALUM CHIP	33uF	20% 6.3V	
C906	1-135-148-21	TANTAL. CHIP	1.5uF	20% 16V	
		< CONNECTOR >			
CN301	1-580-509-11	CONNECTOR, BOARD TO BOARD(P)14P			
		< COIL >			
L901	1-412-032-11	INDUCTOR CHIP 100uH			
		< TRANSISTOR >			
Q901	8-765-420-02	TRANSISTOR 2SK300-3			
		< RESISTOR >			
R901	1-216-025-00	METAL CHIP	100	5% 1/10W	
R902	1-216-063-00	METAL CHIP	3.9K	5% 1/10W	
R903	1-216-089-00	METAL CHIP	47K	5% 1/10W	
R904	1-216-077-00	METAL CHIP	15K	5% 1/10W	
R905	1-216-051-00	METAL CHIP	1.2K	5% 1/10W	
**********					
	* A-7071-354-A	CF-22 (P) BOARD, COMPLETE			
		**********			
					(Ref. No. 8000 Series)
		< SWITCH >			
S766	1-572-499-11	SWITCH, TACTIL (FADER)			
**********					
	* A-7071-356-A	CF-23 (P) BOARD, COMPLETE			
		**********			
					(Ref. No. 7000 Series)
		< CONNECTOR >			
CN757	1-568-323-11	CONNECTOR, BOARD TO BOARD 4P			
		< DIODE >			
D751	8-719-420-15	DIODE MA8082-M			
D752	8-719-420-15	DIODE MA8082-M			
D755	8-719-420-41	DIODE MA123			
		< SWITCH >			
S756	1-572-288-11	SWITCH, PUSH (AUTO LOCK)			
S757	1-572-438-11	SWITCH, TACTIL (WHITE BALANCE)			
S758	1-572-438-11	SWITCH, TACTIL (BACK LIGHT)			
S759	1-572-438-11	SWITCH, TACTIL (FOCUS)			
S760	1-572-438-11	SWITCH, TACTIL (SHUTTER SPEED)			
		< FLEXIBLE BOARD >			
W756	1-636-589-11	FP-353 BOARD			
**********					
	* A-7071-358-A	CF-24 (P) BOARD, COMPLETE			
		**********			
					(Ref. No. 10000 Series)
		< CONNECTOR >			
CN771	1-573-054-11	CONNECTOR, BOARD TO BOARD(F)4P			
		< DIODE >			
D771	8-719-404-40	DIODE MA121-TW			
D772	8-719-420-15	DIODE MA8082-M			
D773	8-719-420-15	DIODE MA8082-M			
D774	8-719-420-15	DIODE MA8082-M			
D779	8-719-420-15	DIODE MA8082-M			
D781	8-719-420-15	DIODE MA8082-M			
		< SWITCH >			
S771	1-572-438-11	SWITCH, TACTIL (SUPER IMPOSE ON/OFF)			
S772	1-572-438-11	SWITCH, TACTIL (MEMORY)			
S773	1-572-438-11	SWITCH, TACTIL (COLOR/MODE)			
**********					
	* A-7071-359-A	CF-25 (P) BOARD, COMPLETE			
		**********			
					(Ref. No. 9000 Series)
		< CONNECTOR >			
CN769	1-566-538-11	CONNECTOR, FPC (NON ZIF) 6P			
		< DIODE >			
D768	8-719-400-18	DIODE 1S2837			

When indicating parts by reference number, please include the board name.

Ref.No.	Part No.	Description			Remark
		< SWITCH >			
S768	1-572-438-11	SWITCH, TACTIL (EDITSEARCH +)			
S769	1-572-438-11	SWITCH, TACTIL (EDITSEARCH -)			
S770	1-572-497-11	SWITCH, SLIDE (EDIT)			
**********					
	A-7062-627-A	DD-31 (P) BOARD, COMPLETE			
		********** (Ref.No. 3000 Series)			
		< CONNECTOR >			
*	3-749-758-02	CASE (UPPER), SHIELD, DD			
*	3-749-759-02	CASE (LOWER), SHIELD, DD			
		< CAPACITOR >			
C101	1-126-157-11	ELECT	10uF	20% 16V	
C102	1-127-556-11	ELECT(SOLID)	6.8uF	20% 16V	
C103	1-127-558-11	ELECT(SOLID)	10uF	20% 10V	
C106	1-126-163-11	ELECT	4.7uF	20% 50V	
C108	1-126-163-11	ELECT	4.7uF	20% 50V	
C109	1-126-162-11	ELECT	3.3uF	20% 50V	
C110	1-126-157-11	ELECT	10uF	20% 16V	
C111	1-126-157-11	ELECT	10uF	20% 16V	
C112	1-128-078-11	ELECT	33uF	20% 10V	
C113	1-163-809-11	CERAMIC CHIP	0.047uF	10% 25V	
C114	1-162-919-11	CERAMIC CHIP	22PF	5% 50V	
C115	1-162-919-11	CERAMIC CHIP	22PF	5% 50V	
C116	1-127-558-11	ELECT(SOLID)	10uF	20% 10V	
C117	1-127-558-11	ELECT(SOLID)	10uF	20% 10V	
C118	1-126-157-11	ELECT	10uF	20% 16V	
C119	1-127-556-11	ELECT(SOLID)	6.8uF	20% 16V	
C120	1-127-558-11	ELECT(SOLID)	10uF	20% 10V	
C121	1-127-558-11	ELECT(SOLID)	10uF	20% 10V	
C122	1-126-162-11	ELECT	3.3uF	20% 50V	
C123	1-162-964-11	CERAMIC CHIP	0.001uF	10% 50V	
C124	1-162-964-11	CERAMIC CHIP	0.001uF	10% 50V	
C125	1-163-017-00	CERAMIC CHIP	0.0047uF	5% 50V	
C126	1-163-009-11	CERAMIC CHIP	0.001uF	10% 50V	
C127	1-164-218-11	CERAMIC CHIP	180PF	0.25PF 50V	
C128	1-164-633-11	CERAMIC CHIP	0.1uF	10% 25V	
C129	1-162-968-11	CERAMIC CHIP	0.0047uF	10% 50V	
C130	1-164-232-11	CERAMIC CHIP	0.01uF	50V	
C131	1-162-964-11	CERAMIC CHIP	0.001uF	10% 50V	
C132	1-162-970-11	CERAMIC CHIP	0.01uF	10% 25V	
C136	1-162-964-11	CERAMIC CHIP	0.001uF	10% 50V	
C137	1-164-182-11	CERAMIC CHIP	0.0033uF	10% 50V	
C139	1-164-182-11	CERAMIC CHIP	0.0033uF	10% 50V	
C140	1-164-633-11	CERAMIC CHIP	0.1uF	10% 25V	
C141	1-162-970-11	CERAMIC CHIP	0.01uF	10% 25V	
C142	1-164-227-11	CERAMIC CHIP	0.022uF	10% 25V	
C143	1-163-005-11	CERAMIC CHIP	470PF	10% 50V	
		< CONNECTOR >			
CN101	* 1-566-198-11	PIN, CONNECTOR (PC BOARD) 5P			
		< DIODE >			
D101	8-719-941-04	DIODE SB07-03C			
D102	8-719-938-75	DIODE SB05-05CP			
D103	8-719-951-22	DIODE IMN10			
D104	8-719-941-04	DIODE SB07-03C			
D105	8-719-981-59	DIODE FC805			
		< IC >			
IC101	8-759-500-42	IC MB3783PFV			
IC102	8-759-998-94	IC LM311DR			
		< JACK >			
J101	1-537-309-11	TERMINAL BOARD (BATTERY)			
		< COIL >			
L101	1-410-337-11	INDUCTOR	1uH		
L102	1-410-337-11	INDUCTOR	1uH		
L103	1-410-337-11	INDUCTOR	1uH		
L104	1-424-104-11	COIL, CHOKE	10uH		
L105	1-424-105-11	COIL, CHOKE	22uH		
L106	1-424-104-11	COIL, CHOKE	10uH		
L107	1-412-034-21	INDUCTOR CHIP	330uH		
L108	1-412-034-21	INDUCTOR CHIP	330uH		
L109	1-412-034-21	INDUCTOR CHIP	330uH		
L110	1-424-104-11	COIL, CHOKE	10uH		
L111	1-424-106-11	COIL, CHOKE	47uH		
L112	1-424-105-11	COIL, CHOKE	22uH		
L113	1-424-104-11	COIL, CHOKE	10uH		
L114	1-424-105-11	COIL, CHOKE	22uH		
L115	1-412-030-11	INDUCTOR CHIP	22uH		
L116	1-412-027-11	INDUCTOR CHIP	2.2uH		
L117	1-410-337-11	INDUCTOR	1uH		
		< IC LINK >			
PS101 ⚠	1-532-841-21	LINK, IC			
PS102 ⚠	1-532-841-21	LINK, IC			
PS103 ⚠	1-532-841-21	LINK, IC			
		< TRANSISTOR >			
Q101	8-729-421-90	TRANSISTOR XN4113			
Q102	8-729-805-25	TRANSISTOR 2SB1121			
Q104	8-729-119-83	TRANSISTOR 2SC4175-B3			
Q105	8-729-805-25	TRANSISTOR 2SB1121			
Q106	8-729-805-25	TRANSISTOR 2SB1121			

The components identified by mark ⚠ or dotted line with mark ⚠ are critical for safety. Replace only with part number specified.

When indicating parts by reference number, please include the board name.

Ref. No.	Part No.	Description				Remark
Q107	8-729-805-25	TRANSISTOR 2SB1121				
Q108	8-729-905-12	TRANSISTOR DTA144EU				
		< RESISTOR >				
R101	1-216-033-00	METAL CHIP	220	5%	1/10W	
R102	1-216-019-00	METAL CHIP	56	5%	1/10W	
R103	1-216-009-00	METAL CHIP	22	5%	1/10W	
R104	1-216-828-11	METAL CHIP	3.9K	5%	1/16W	
R105	1-216-841-11	METAL CHIP	47K	5%	1/16W	
R106	1-216-841-11	METAL CHIP	47K	5%	1/16W	
R107	1-216-825-11	METAL CHIP	2.2K	5%	1/16W	
R108	1-216-836-11	METAL CHIP	18K	5%	1/16W	
R109	1-216-045-00	METAL CHIP	680	5%	1/10W	
R110	1-216-061-00	METAL CHIP	3.3K	5%	1/10W	
R111	1-216-826-11	METAL CHIP	2.7K	5%	1/16W	
R112	1-216-821-11	METAL CHIP	1K	5%	1/16W	
R113	1-216-828-11	METAL CHIP	3.9K	5%	1/16W	
R114	1-216-057-00	METAL CHIP	2.2K	5%	1/10W	
R115	1-216-831-11	METAL CHIP	6.8K	5%	1/16W	
R116	1-216-826-11	METAL CHIP	2.7K	5%	1/16W	
R117	1-216-821-11	METAL CHIP	1K	5%	1/16W	
R118	1-216-828-11	METAL CHIP	3.9K	5%	1/16W	
R119	1-216-823-11	METAL CHIP	1.5K	5%	1/16W	
R120	1-216-057-00	METAL CHIP	2.2K	5%	1/10W	
R121	1-216-837-11	METAL CHIP	22K	5%	1/16W	
R122	1-216-081-00	METAL CHIP	22K	5%	1/10W	
R123	1-216-842-11	METAL CHIP	56K	5%	1/16W	
R124	1-216-825-11	METAL CHIP	2.2K	5%	1/16W	
R126	1-216-838-11	METAL CHIP	27K	5%	1/16W	
R127	1-216-840-11	METAL CHIP	39K	5%	1/16W	
R128	1-216-829-11	METAL CHIP	4.7K	5%	1/16W	
R129	1-216-019-00	METAL CHIP	56	5%	1/10W	
R130	1-216-023-00	METAL CHIP	82	5%	1/10W	
R131	1-216-025-00	METAL CHIP	100	5%	1/10W	
R132	1-216-838-11	METAL CHIP	27K	5%	1/16W	
R133	1-216-829-11	METAL CHIP	4.7K	5%	1/16W	
R134	1-216-849-11	METAL CHIP	220K	5%	1/16W	
R135	1-216-102-00	METAL GLAZE	160K	5%	1/10W	
R136	1-216-101-00	METAL CHIP	150K	5%	1/10W	
R137	1-216-830-11	METAL CHIP	5.6K	5%	1/16W	
R138	1-216-828-11	METAL CHIP	3.9K	5%	1/16W	
R139	1-216-849-11	METAL CHIP	220K	5%	1/16W	
R140	1-216-841-11	METAL CHIP	47K	5%	1/16W	
		< VARIABLE RESISTOR >				
RV101	1-230-526-11	RES, ADJ METAL	47K			
RV102	1-238-087-11	RES, ADJ CERMET	1K			
RV103	1-238-087-11	RES, ADJ CERMET	1K			
RV104	1-238-087-11	RES, ADJ CERMET	1K			
RV105	1-238-089-11	RES, ADJ CERMET	4.7K			

Ref. No.	Part No.	Description	Remark
**********			
	* A-7071-349-A	EJ-20 (P) BOARD, COMPLETE	
		**********	
		(Ref. No. 10000 Series)	
		< CONNECTOR >	
CN915	1-565-874-11	PIN, CONNECTOR (PC BOARD) 2P	
		< SWITCH >	
S915	1-572-498-11	SWITCH, SLIDE (EJECT ▲)	
**********			
	* A-7071-350-A	FK-41 (P) BOARD, COMPLETE (AEP, UK MODEL)	
		**********	
	* A-7071-391-A	FK-41 (P) BOARD, COMPLETE	
		(E, Australian MODEL)	
		**********	
		(Ref. No. 9000 Series)	
	* 3-749-906-01	INSULATOR, VTR BUTTON	
		< CONNECTOR >	
CN902	1-565-874-11	PIN, CONNECTOR (PC BOARD) 2P	
CN903	1-566-543-31	CONNECTOR, FPC (NON ZIF) 11P	
CN904	* 1-565-875-11	PIN, CONNECTOR (PC BOARD) 3P	
CN905	1-565-874-11	PIN, CONNECTOR (PC BOARD) 2P	
		< SWITCH >	
S901	1-572-283-11	SWITCH, SLIDE (POWER)	
S902	1-572-438-11	SWITCH, TACTIL (REW ◂◂)	
S903	1-572-438-11	SWITCH, TACTIL (PB ▷)	
S904	1-572-438-11	SWITCH, TACTIL (FF ▸▸)	
S905	1-572-438-11	SWITCH, TACTIL (STOP □)	
S906	1-572-438-11	SWITCH, TACTIL (PAUSE □□)	
S907	1-572-498-21	SWITCH, SLIDE (● REC ◣)	
		(E, Australian MODEL)	
		< FLEXIBLE BOARD >	
W901	1-636-500-11	FP319 FLEXIBLE BOARD	
**********			
	* 1-628-060-12	FP-89 FLEXIBLE BOARD	
		**********	
		(Ref. No. 11000 Series)	
	3-728-869-02	HOLDER, SENSOR	
		< DIODE >	
D991	8-719-820-44	PHOTO COUPLER TLP907	

When indicating parts by reference number, please include the board name.

Ref.No.	Part No.	Description	Remark
		< TRANSISTOR >	
Q991	8-729-906-48	TRANSISTOR EE-TP109	
		< SWITCH >	
S991	1-571-099-11	SWITCH (CASSETTE DOWN)	
S993	1-572-173-11	SWITCH, SLIDE (ENCODER) (MODE)	
**********			
*	1-628-061-12	FP-90 FLEXIBLE BOARD	
		********** (Ref.No. 12000 Series)	
	3-728-837-01	HOLDER, LED	
	3-728-869-02	HOLDER, SENSOR	
		< DIODE >	
D992	8-719-940-81	DIODE GL452S	
D993	8-719-820-44	PHOTO COUPLER TLP-907	
		< TRANSISTOR >	
Q992	8-729-906-48	TRANSISTOR EE-TP109	
		< SWITCH >	
S992	1-572-298-11	SWITCH, PUSH (REC PROOF, TAPE SELECT)	
**********			
*	A-7071-360-A	JC-10 (P) BOARD, COMPLETE	
		********** (Ref.No. 7000 Series)	
		< FLAT CABLE >	
W972	1-590-108-11	CABLE, FLAT (FFC-7)	
W974	1-590-107-11	CABLE, FLAT (FFC-6)	
**********			
*	A-7062-625-A	LD-38 (P) BOARD, COMPLETE	
		********** (Ref.No. 3000 Series)	
		< CAPACITOR >	
C701	1-135-157-21	TANTALUM CHIP 10uF 20% 6.3V	
C702	1-162-970-11	CERAMIC CHIP 0.01uF 10% 25V	
C703	1-162-968-11	CERAMIC CHIP 0.0047uF 10% 50V	
C706	1-164-156-11	CERAMIC CHIP 0.1uF 25V	
C707	1-135-181-21	TANTALUM CHIP 4.7uF 20% 6.3V	
C708	1-162-970-11	CERAMIC CHIP 0.01uF 10% 25V	
C709	1-162-970-11	CERAMIC CHIP 0.01uF 10% 25V	
C710	1-162-970-11	CERAMIC CHIP 0.01uF 10% 25V	
C711	1-162-964-11	CERAMIC CHIP 0.001uF 10% 50V	
C713	1-163-809-11	CERAMIC CHIP 0.047uF 10% 25V	
C714	1-164-156-11	CERAMIC CHIP 0.1uF 25V	
C715	1-164-156-11	CERAMIC CHIP 0.1uF 25V	
C716	1-162-637-11	CERAMIC CHIP 0.47uF 16V	
		< CONNECTOR >	
CN702	1-566-540-11	CONNECTOR, FPC (NON ZIF) 8P	
CN703	* 1-565-543-11	PIN, CONNECTOR (PC BOARD) 4P	
CN704	* 1-565-543-21	PIN, CONNECTOR (PC BOARD) 4P	
CN705	* 1-565-542-11	PIN, CONNECTOR (PC BOARD) 3P	
		< DIODE >	
D701	8-719-404-46	DIODE MA110	
		< IC >	
IC701	8-759-037-20	IC MPC1737MR	
IC702	8-759-100-94	IC uPC358G2	
IC702	8-759-998-98	IC LM358DR	
IC703	8-759-981-82	IC RC3414M	
		< TRANSISTOR >	
Q701	8-729-905-15	TRANSISTOR DTC144WU	
Q702	8-729-920-39	TRANSISTOR IMT1US	
Q703	8-729-905-61	TRANSISTOR DTC124EU	
Q704	8-729-905-23	TRANSISTOR 2SA1576-R	
Q706	8-729-805-25	TRANSISTOR 2SB1121	
Q707	8-729-117-32	TRANSISTOR 2SC4177	
		< RESISTOR >	
R701	1-216-837-11	METAL CHIP 22K 5% 1/16W	
R702	1-216-836-11	METAL CHIP 18K 5% 1/16W	
R703	1-216-842-11	METAL CHIP 56K 5% 1/16W	
R705	1-216-817-11	METAL CHIP 470 5% 1/16W	
R707	1-216-833-11	METAL CHIP 10K 5% 1/16W	
R708	1-216-836-11	METAL CHIP 18K 5% 1/16W	
R709	1-216-842-11	METAL CHIP 56K 5% 1/16W	
R710	1-216-821-11	METAL CHIP 1K 5% 1/16W	
R712	1-216-857-11	METAL CHIP 1M 5% 1/16W	
R714	1-216-825-11	METAL CHIP 2.2K 5% 1/16W	
R715	1-216-825-11	METAL CHIP 2.2K 5% 1/16W	
R716	1-216-309-00	METAL CHIP 5.6 5% 1/10W	
R717	1-216-791-11	METAL CHIP 3.3 5% 1/16W	
R718	1-216-791-11	METAL CHIP 3.3 5% 1/16W	
R719	1-216-833-11	METAL CHIP 10K 5% 1/16W	
R720	1-216-828-11	METAL CHIP 3.9K 5% 1/16W	
R723	1-216-825-11	METAL CHIP 2.2K 5% 1/16W	
R725	1-216-829-11	METAL CHIP 4.7K 5% 1/16W	
R726	1-216-819-11	METAL CHIP 680 5% 1/16W	
R730	1-216-833-11	METAL CHIP 10K 5% 1/16W	

When indicating parts by reference number, please include the board name.

LD-38P MA-71P SW-158P

Ref. No.	Part No.	Description				Remark
R732	1-216-835-11	METAL CHIP	15K	5%	1/16W	
R733	1-216-830-11	METAL CHIP	5.6K	5%	1/16W	
R734	1-216-857-11	METAL CHIP	1M	5%	1/16W	
R735	1-216-822-11	METAL CHIP	1.2K	5%	1/16W	
R736	1-216-841-11	METAL CHIP	47K	5%	1/16W	
R737	1-216-839-11	METAL CHIP	33K	5%	1/16W	
R738	1-216-843-11	METAL CHIP	68K	5%	1/16W	
R739	1-216-843-11	METAL CHIP	68K	5%	1/16W	
R740	1-216-843-11	METAL CHIP	68K	5%	1/16W	
		< VARIABLE RESISTOR >				
RV701	1-238-860-11	RES, ADJ CERMET 220K				
		< FLEXIBLE BOARD >				
W701	1-630-595-21	FP-187 FLEXIBLE BOARD				
**********						
	* A-7071-363-A	MA-71 (P) BOARD, COMPLETE				
		**********				
						(Ref. No. 5000 Series)
		< CAPACITOR >				
C401	1-162-964-11	CERAMIC CHIP	0.001uF	10%	50V	
C402	1-163-809-11	CERAMIC CHIP	0.047uF	10%	25V	
C403	1-163-809-11	CERAMIC CHIP	0.047uF	10%	25V	
C404	1-162-953-11	CERAMIC CHIP	100PF	5%	50V	
C406	1-162-587-11	CERAMIC CHIP	0.039uF	10%	25V	
C407	1-162-964-11	CERAMIC CHIP	0.001uF	10%	50V	
C408	1-164-156-11	CERAMIC CHIP	0.1uF		25V	
C409	1-124-967-11	ELECT	10uF	20%	10V	
C410	1-162-953-11	CERAMIC CHIP	100PF	5%	50V	
C411	1-135-181-21	TANTALUM CHIP	4.7uF	20%	6.3V	
C412	1-135-181-21	TANTALUM CHIP	4.7uF	20%	6.3V	
C413	1-126-205-11	ELECT CHIP	47uF	20%	6.3V	
C414	1-162-964-11	CERAMIC CHIP	0.001uF	10%	50V	
C415	1-162-957-11	CERAMIC CHIP	220PF	5%	50V	
C416	1-162-941-11	CERAMIC CHIP	10PF	0.5PF	50V	
		< CONNECTOR >				
CN404	* 1-565-543-11	PIN, CONNECTOR (PC BOARD) 4P				
		< DIODE >				
D401	8-719-420-15	DIODE MA8082-M				
		< JACK >				
J904	1-568-027-11	JACK, SMALL TYPE 1P (MIC)				

Ref. No.	Part No.	Description				Remark
		< TRANSISTOR >				
Q402	8-729-905-35	TRANSISTOR 2SC4081R				
Q403	8-729-905-35	TRANSISTOR 2SC4081R				
Q404	8-729-905-35	TRANSISTOR 2SC4081R				
Q405	8-729-905-35	TRANSISTOR 2SC4081R				
Q481	8-729-905-35	TRANSISTOR 2SC4081R				
		< RESISTOR >				
R401	1-216-823-11	METAL CHIP	1.5K	5%	1/16W	
R402	1-216-834-11	METAL CHIP	12K	5%	1/16W	
R403	1-216-844-11	METAL CHIP	82K	5%	1/16W	
R404	1-216-845-11	METAL CHIP	100K	5%	1/16W	
R405	1-216-832-11	METAL CHIP	8.2K	5%	1/16W	
R406	1-216-831-11	METAL CHIP	6.8K	5%	1/16W	
R407	1-216-836-11	METAL CHIP	18K	5%	1/16W	
R408	1-216-831-11	METAL CHIP	6.8K	5%	1/16W	
R409	1-216-836-11	METAL CHIP	18K	5%	1/16W	
R410	1-216-810-11	METAL CHIP	120	5%	1/16W	
R411	1-216-829-11	METAL CHIP	4.7K	5%	1/16W	
R412	1-216-836-11	METAL CHIP	18K	5%	1/16W	
R413	1-216-821-11	METAL CHIP	1K	5%	1/16W	
R414	1-216-828-11	METAL CHIP	3.9K	5%	1/16W	
R415	1-216-833-11	METAL CHIP	10K	5%	1/16W	
R416	1-216-815-11	METAL CHIP	330	5%	1/16W	
R417	1-216-828-11	METAL CHIP	3.9K	5%	1/16W	
R418	1-216-295-00	METAL CHIP	0	5%	1/10W	
R419	1-216-295-00	METAL CHIP	0	5%	1/10W	
R484	1-216-296-00	METAL CHIP	0	5%	1/8W	
R485	1-216-864-11	METAL CHIP	0			
**********						
	* A-7071-362-A	SW-158 (P) BOARD, COMPLETE				
		**********				
						(Ref. No. 5000 Series)
		< CAPACITOR >				
C942	1-163-009-11	CERAMIC CHIP	0.001uF	10%	50V	
C943	1-163-009-11	CERAMIC CHIP	0.001uF	10%	50V	
C944	1-163-009-11	CERAMIC CHIP	0.001uF	10%	50V	
C945	1-163-009-11	CERAMIC CHIP	0.001uF	10%	50V	
		< DIODE >				
D941	8-719-420-15	DIODE MA8082-M				
D942	8-719-106-71	DIODE RD12M-B2				
D943	8-719-400-18	DIODE MA152WK				
D944	8-719-420-15	DIODE MA8082-M				
D945	8-719-420-15	DIODE MA8082-M				
		< JACK >				
J941	1-565-276-21	JACK, ULTRA SMALL 1P (REMOTE)				

When indicating parts by reference number, please include the board name.

Ref. No.	Part No.	Description	Remark
J942	1-568-027-11	JACK, SMALL TYPE 1P (earphone)	
		< COIL >	
L941	1-410-369-11	INDUCTOR CHIP 1uH	
L942	1-410-369-11	INDUCTOR CHIP 1uH	
L943	1-410-369-11	INDUCTOR CHIP 1uH	
L944	1-410-369-11	INDUCTOR CHIP 1uH	
L945	1-410-369-11	INDUCTOR CHIP 1uH	
		< SWITCH >	
S921	1-553-977-00	SWITCH, SLIDE (LOCK/STANDBY)	
S922	1-571-315-11	SWITCH, KEY BOARD (START/STOP)	
		< FLAT CABLE >	
W941	1-590-102-11	CABLE, FLAT (FFC-1)	
**********			
* A-7062-628-A		TI-32 (P) BOARD, COMPLETE ********** (Ref. No. 4000 Series)	
		< CAPACITOR >	
C801	1-164-156-11	CERAMIC CHIP 0.1uF 25V	
C802	1-135-157-21	TANTALUM CHIP 10uF 20% 6.3V	
C803	1-162-637-11	CERAMIC CHIP 0.47uF 16V	
C804	1-162-913-11	CERAMIC CHIP 8PF 0.5PF 50V	
C805	1-162-970-11	CERAMIC CHIP 0.01uF 10% 25V	
C807	1-162-970-11	CERAMIC CHIP 0.01uF 10% 25V	
C808	1-162-964-11	CERAMIC CHIP 0.001uF 10% 50V	
C810	1-135-157-21	TANTALUM CHIP 10uF 20% 6.3V	
C811	1-164-156-11	CERAMIC CHIP 0.1uF 25V	
C812	1-162-970-11	CERAMIC CHIP 0.01uF 10% 25V	
C813	1-162-949-11	CERAMIC CHIP 47PF 5% 50V	
C814	1-162-949-11	CERAMIC CHIP 47PF 5% 50V	
C815	1-162-949-11	CERAMIC CHIP 47PF 5% 50V	
C816	1-164-156-11	CERAMIC CHIP 0.1uF 25V	
C817	1-162-975-11	CERAMIC CHIP 24PF 5% 50V	
C819	1-162-970-11	CERAMIC CHIP 0.01uF 10% 25V	
		< CONNECTOR >	
CN801	1-580-510-11	CONNECTOR, BOARD TO BOARD(P)16P	
		< TRIMMER >	
CT801	1-141-331-11	CAP, CHIP TRIMMER	
CT801	1-141-368-11	CAP, CHIP TRIMMER	
CT801	1-141-424-11	CAP, ADJ	
CT801	1-141-424-11	CAP, ADJ	
CT802	1-141-331-11	CAP, CHIP TRIMMER	
CT802	1-141-368-11	CAP, CHIP TRIMMER	
CT802	1-141-424-11	CAP, ADJ	
CT802	1-141-424-11	CAP, ADJ	
		< DIODE >	
D801	8-713-300-88	DIODE 1T33C-01	
		< IC >	
IC801	8-759-979-96	IC MB8464A-15LLPF	
IC802	8-759-150-75	IC uPD6145G-621-E1	
IC803	8-759-983-54	IC MB670479U	
		< COIL >	
L801	1-410-377-31	INDUCTOR CHIP 4.7uH	
L802	1-410-384-31	INDUCTOR CHIP 18uH	
L803	1-410-390-11	INDUCTOR CHIP 56uH	
L804	1-410-381-11	INDUCTOR CHIP 10uH	
		< TRANSISTOR >	
Q801	8-729-905-18	TRANSISTOR DTC144EU	
Q802	8-729-403-24	TRANSISTOR XN4210	
		< RESISTOR >	
R801	1-216-833-11	METAL CHIP 10K 5% 1/16W	
R805	1-216-833-11	METAL CHIP 10K 5% 1/16W	
R806	1-216-833-11	METAL CHIP 10K 5% 1/16W	
R809	1-216-833-11	METAL CHIP 10K 5% 1/16W	
R810	1-216-833-11	METAL CHIP 10K 5% 1/16W	
R811	1-216-833-11	METAL CHIP 10K 5% 1/16W	
R812	1-216-833-11	METAL CHIP 10K 5% 1/16W	
R815	1-216-833-11	METAL CHIP 10K 5% 1/16W	
R816	1-216-833-11	METAL CHIP 10K 5% 1/16W	
R818	1-216-837-11	METAL CHIP 22K 5% 1/16W	
R819	1-216-829-11	METAL CHIP 4.7K 5% 1/16W	
R820	1-216-845-11	METAL CHIP 100K 5% 1/16W	
R821	1-216-845-11	METAL CHIP 100K 5% 1/16W	
R822	1-216-833-11	METAL CHIP 10K 5% 1/16W	
R823	1-216-825-11	METAL CHIP 2.2K 5% 1/16W	
R826	1-216-825-11	METAL CHIP 2.2K 5% 1/16W	
R827	1-216-821-11	METAL CHIP 1K 5% 1/16W	
R828	1-216-825-11	METAL CHIP 2.2K 5% 1/16W	
R829	1-216-825-11	METAL CHIP 2.2K 5% 1/16W	
R830	1-216-817-11	METAL CHIP 470 5% 1/16W	
R831	1-216-817-11	METAL CHIP 470 5% 1/16W	
R832	1-216-833-11	METAL CHIP 10K 5% 1/16W	
		< NETWORK RESISTER >	
RB801	1-236-424-11	NETWORK, RES 10K	
RB802	1-236-424-11	NETWORK, RES 10K	
RB804	1-236-424-11	NETWORK, RES 10K	

When indicating parts by reference number, please include the board name.

VC-81P

Ref. No.	Part No.	Description			Remark
**********					
	* A-7062-626-A	VC-81 (P) BOARD, COMPLETE			
		**********			
		(Ref. No. 1000 Series)			
	* A-7068-189-A	COMPLETE PCB DT-77LX HIC			
	* 3-940-303-01	SHEET, REINFORCEMENT, CB32			
		< CAPACITOR >			
C101	1-135-211-11	TANTAL. CHIP	6.8uF	20% 6.3V	
C102	1-135-162-21	TANTALUM CHIP	33uF	20% 6.3V	
C103	1-162-970-11	CERAMIC CHIP	0.01uF	10% 25V	
C104	1-162-970-11	CERAMIC CHIP	0.01uF	10% 25V	
C105	1-135-162-21	TANTALUM CHIP	33uF	20% 6.3V	
C108	1-126-607-11	ELECT CHIP	47uF	20% 4V	
C109	1-135-181-21	TANTALUM CHIP	4.7uF	20% 6.3V	
C112	1-162-910-11	CERAMIC CHIP	5PF	0.25PF 50V	
C131	1-164-156-11	CERAMIC CHIP	0.1uF	25V	
C132	1-164-156-11	CERAMIC CHIP	0.1uF	25V	
C133	1-164-633-11	CERAMIC CHIP	0.1uF	10% 25V	
C134	1-135-079-21	TANTALUM CHIP	3.3uF	10% 35V	
C136	1-162-964-11	CERAMIC CHIP	0.001uF	10% 50V	
C137	1-135-177-21	TANTALUM CHIP	1uF	20% 20V	
C138	1-164-156-11	CERAMIC CHIP	0.1uF	25V	
C141	1-162-970-11	CERAMIC CHIP	0.01uF	10% 25V	
C142	1-164-633-11	CERAMIC CHIP	0.1uF	10% 25V	
C143	1-162-964-11	CERAMIC CHIP	0.001uF	10% 50V	
C145	1-162-964-11	CERAMIC CHIP	0.001uF	10% 50V	
C149	1-164-337-11	CERAMIC CHIP	2.2uF	16V	
C151	1-162-970-11	CERAMIC CHIP	0.01uF	10% 25V	
C152	1-162-964-11	CERAMIC CHIP	0.001uF	10% 50V	
C153	1-162-964-11	CERAMIC CHIP	0.001uF	10% 50V	
C154	1-162-916-11	CERAMIC CHIP	12PF	5% 50V	
C156	1-162-910-11	CERAMIC CHIP	5PF	0.25PF 50V	
C157	1-162-910-11	CERAMIC CHIP	5PF	0.25PF 50V	
C158	1-162-970-11	CERAMIC CHIP	0.01uF	10% 25V	
C180	1-135-157-21	TANTALUM CHIP	10uF	20% 6.3V	
C181	1-135-177-21	TANTALUM CHIP	1uF	20% 20V	
C182	1-164-156-11	CERAMIC CHIP	0.1uF	25V	
C183	1-162-950-11	CERAMIC CHIP	56PF	5% 50V	
C184	1-164-156-11	CERAMIC CHIP	0.1uF	25V	
C185	1-164-156-11	CERAMIC CHIP	0.1uF	25V	
C186	1-162-970-11	CERAMIC CHIP	0.01uF	10% 25V	
C187	1-164-156-11	CERAMIC CHIP	0.1uF	25V	
C188	1-162-945-11	CERAMIC CHIP	22PF	5% 50V	
C189	1-164-156-11	CERAMIC CHIP	0.1uF	25V	
C191	1-164-156-11	CERAMIC CHIP	0.1uF	25V	
C192	1-164-156-11	CERAMIC CHIP	0.1uF	25V	
C196	1-164-217-11	CERAMIC CHIP	150PF	0.25PF 50V	
C197	1-162-922-11	CERAMIC CHIP	39PF	5% 50V	
C198	1-162-957-11	CERAMIC CHIP	220PF	5% 50V	
C199	1-162-925-11	CERAMIC CHIP	68PF	5% 50V	
C200	1-162-919-11	CERAMIC CHIP	22PF	5% 50V	
C201	1-162-945-11	CERAMIC CHIP	22PF	5% 50V	
C202	1-162-638-11	CERAMIC CHIP	1uF	16V	
C203	1-162-638-11	CERAMIC CHIP	1uF	16V	
C204	1-162-638-11	CERAMIC CHIP	1uF	16V	
C205	1-162-638-11	CERAMIC CHIP	1uF	16V	
C206	1-162-638-11	CERAMIC CHIP	1uF	16V	
C210	1-164-156-11	CERAMIC CHIP	0.1uF	25V	
C211	1-164-156-11	CERAMIC CHIP	0.1uF	25V	
C212	1-164-156-11	CERAMIC CHIP	0.1uF	25V	
C213	1-164-156-11	CERAMIC CHIP	0.1uF	25V	
C214	1-164-156-11	CERAMIC CHIP	0.1uF	25V	
C215	1-164-156-11	CERAMIC CHIP	0.1uF	25V	
C216	1-164-156-11	CERAMIC CHIP	0.1uF	25V	
C217	1-164-156-11	CERAMIC CHIP	0.1uF	25V	
C219	1-162-638-11	CERAMIC CHIP	1uF	16V	
C220	1-162-638-11	CERAMIC CHIP	1uF	16V	
C221	1-162-638-11	CERAMIC CHIP	1uF	16V	
C222	1-162-638-11	CERAMIC CHIP	1uF	16V	
C223	1-162-638-11	CERAMIC CHIP	1uF	16V	
C224	1-162-970-11	CERAMIC CHIP	0.01uF	10% 25V	
C225	1-162-638-11	CERAMIC CHIP	1uF	16V	
C229	1-164-156-11	CERAMIC CHIP	0.1uF	25V	
C230	1-135-211-11	TANTAL. CHIP	6.8uF	20% 6.3V	
C232	1-162-964-11	CERAMIC CHIP	0.001uF	10% 50V	
C233	1-162-942-11	CERAMIC CHIP	12PF	5% 50V	
C234	1-162-970-11	CERAMIC CHIP	0.01uF	10% 25V	
C235	1-135-157-21	TANTALUM CHIP	10uF	20% 6.3V	
C236	1-164-156-11	CERAMIC CHIP	0.1uF	25V	
C237	1-164-156-11	CERAMIC CHIP	0.1uF	25V	
C238	1-163-119-00	CERAMIC CHIP	120PF	5% 50V	
C239	1-164-156-11	CERAMIC CHIP	0.1uF	25V	
C241	1-162-953-11	CERAMIC CHIP	100PF	5% 50V	
C252	1-135-157-21	TANTALUM CHIP	10uF	20% 6.3V	
C253	1-162-970-11	CERAMIC CHIP	0.01uF	10% 25V	
C254	1-164-005-11	CERAMIC CHIP	0.47uF	25V	
C255	1-164-005-11	CERAMIC CHIP	0.47uF	25V	
C256	1-164-005-11	CERAMIC CHIP	0.47uF	25V	
C261	1-164-156-11	CERAMIC CHIP	0.1uF	25V	
C262	1-164-156-11	CERAMIC CHIP	0.1uF	25V	
C265	1-164-156-11	CERAMIC CHIP	0.1uF	25V	
C266	1-164-156-11	CERAMIC CHIP	0.1uF	25V	
C267	1-164-156-11	CERAMIC CHIP	0.1uF	25V	
C268	1-162-638-11	CERAMIC CHIP	1uF	16V	
C269	1-162-638-11	CERAMIC CHIP	1uF	16V	
C272	1-162-970-11	CERAMIC CHIP	0.01uF	10% 25V	
C273	1-162-923-11	CERAMIC CHIP	47PF	5% 50V	
C274	1-162-925-11	CERAMIC CHIP	68PF	5% 50V	

When indicating parts by reference number, please include the board name.

Ref. No.	Part No.	Description				Remark
C275	1-162-916-11	CERAMIC CHIP	12PF	5%	50V	
C276	1-164-156-11	CERAMIC CHIP	0.1uF		25V	
C277	1-164-156-11	CERAMIC CHIP	0.1uF		25V	
C279	1-164-156-11	CERAMIC CHIP	0.1uF		25V	
C280	1-135-145-11	TANTALUM CHIP	0.47uF	10%	25V	
C281	1-162-923-11	CERAMIC CHIP	47PF	5%	50V	
C282	1-162-925-11	CERAMIC CHIP	68PF	5%	50V	
C283	1-162-916-11	CERAMIC CHIP	12PF	5%	50V	
C301	1-162-952-11	CERAMIC CHIP	82PF	5%	50V	
C304	1-164-156-11	CERAMIC CHIP	0.1uF		25V	
C305	1-135-177-21	TANTALUM CHIP	1uF	20%	20V	
C306	1-164-156-11	CERAMIC CHIP	0.1uF		25V	
C307	1-162-915-11	CERAMIC CHIP	10PF	0.5PF	50V	
C308	1-164-005-11	CERAMIC CHIP	0.47uF		25V	
C309	1-164-156-11	CERAMIC CHIP	0.1uF		25V	
C310	1-164-005-11	CERAMIC CHIP	0.47uF		25V	
C311	1-162-915-11	CERAMIC CHIP	10PF	0.5PF	50V	
C313	1-162-964-11	CERAMIC CHIP	0.001uF	10%	50V	
C315	1-164-156-11	CERAMIC CHIP	0.1uF		25V	
C316	1-164-156-11	CERAMIC CHIP	0.1uF		25V	
C317	1-162-970-11	CERAMIC CHIP	0.01uF	10%	25V	
C318	1-126-205-11	ELECT CHIP	47uF	20%	6.3V	
C319	1-162-970-11	CERAMIC CHIP	0.01uF	10%	25V	
C320	1-164-156-11	CERAMIC CHIP	0.1uF		25V	
C321	1-164-156-11	CERAMIC CHIP	0.1uF		25V	
C322	1-162-638-11	CERAMIC CHIP	1uF		16V	
C323	1-135-145-11	TANTALUM CHIP	0.47uF	10%	25V	
C331	1-162-926-11	CERAMIC CHIP	82PF	5%	50V	
C332	1-162-919-11	CERAMIC CHIP	22PF	5%	50V	
C333	1-162-916-11	CERAMIC CHIP	12PF	5%	50V	
C334	1-162-638-11	CERAMIC CHIP	1uF		16V	
C336	1-162-970-11	CERAMIC CHIP	0.01uF	10%	25V	
C337	1-162-970-11	CERAMIC CHIP	0.01uF	10%	25V	
C342	1-164-156-11	CERAMIC CHIP	0.1uF		25V	
C343	1-164-337-11	CERAMIC CHIP	2.2uF		16V	
C344	1-162-970-11	CERAMIC CHIP	0.01uF	10%	25V	
C346	1-162-922-11	CERAMIC CHIP	39PF	5%	50V	
C348	1-163-097-00	CERAMIC CHIP	15PF	5%	50V	
C349	1-162-970-11	CERAMIC CHIP	0.01uF	10%	25V	
C360	1-164-156-11	CERAMIC CHIP	0.1uF		25V	
C362	1-162-970-11	CERAMIC CHIP	0.01uF	10%	25V	
C363	1-135-181-21	TANTALUM CHIP	4.7uF	20%	6.3V	
C364	1-135-181-21	TANTALUM CHIP	4.7uF	20%	6.3V	
C365	1-162-970-11	CERAMIC CHIP	0.01uF	10%	25V	
C366	1-135-180-21	TANTALUM CHIP	3.3uF	20%	6.3V	
C367	1-135-180-21	TANTALUM CHIP	3.3uF	20%	6.3V	
C368	1-135-180-21	TANTALUM CHIP	3.3uF	20%	6.3V	
C369	1-162-974-11	CERAMIC CHIP	0.01uF		50V	
C370	1-162-970-11	CERAMIC CHIP	0.01uF	10%	25V	
C371	1-162-974-11	CERAMIC CHIP	0.01uF		50V	

Ref. No.	Part No.	Description				Remark
C372	1-135-072-21	TANTALUM CHIP	0.22uF	10%	35V	
C373	1-135-157-21	TANTALUM CHIP	10uF	20%	6.3V	
C374	1-162-970-11	CERAMIC CHIP	0.01uF	10%	25V	
C378	1-164-156-11	CERAMIC CHIP	0.1uF		25V	
C379	1-135-145-11	TANTALUM CHIP	0.47uF	10%	25V	
C380	1-163-115-00	CERAMIC CHIP	82PF	5%	50V	
C389	1-164-156-11	CERAMIC CHIP	0.1uF		25V	
C415	1-162-945-11	CERAMIC CHIP	22PF	5%	50V	
C416	1-162-949-11	CERAMIC CHIP	47PF	5%	50V	
C501	1-135-181-21	TANTALUM CHIP	4.7uF	20%	6.3V	
C502	1-162-957-11	CERAMIC CHIP	220PF	5%	50V	
C503	1-162-970-11	CERAMIC CHIP	0.01uF	10%	25V	
C504	1-162-970-11	CERAMIC CHIP	0.01uF	10%	25V	
C505	1-162-970-11	CERAMIC CHIP	0.01uF	10%	25V	
C506	1-162-970-11	CERAMIC CHIP	0.01uF	10%	25V	
C507	1-162-962-11	CERAMIC CHIP	470PF	10%	50V	
C508	1-162-970-11	CERAMIC CHIP	0.01uF	10%	25V	
C509	1-162-970-11	CERAMIC CHIP	0.01uF	10%	25V	
C510	1-162-970-11	CERAMIC CHIP	0.01uF	10%	25V	
C511	1-162-970-11	CERAMIC CHIP	0.01uF	10%	25V	
C512	1-162-970-11	CERAMIC CHIP	0.01uF	10%	25V	
C513	1-162-913-11	CERAMIC CHIP	8PF	0.5PF	50V	
C514	1-162-910-11	CERAMIC CHIP	5PF	0.25PF	50V	
C515	1-162-920-11	CERAMIC CHIP	27PF	5%	50V	
C516	1-164-156-11	CERAMIC CHIP	0.1uF		25V	
C517	1-164-337-11	CERAMIC CHIP	2.2uF		16V	
C518	1-164-156-11	CERAMIC CHIP	0.1uF		25V	
C519	1-162-923-11	CERAMIC CHIP	47PF	5%	50V	
C520	1-135-181-21	TANTALUM CHIP	4.7uF	20%	6.3V	
C521	1-163-131-00	CERAMIC CHIP	390PF	5%	50V	
C522	1-162-959-11	CERAMIC CHIP	330PF	5%	50V	
C523	1-162-970-11	CERAMIC CHIP	0.01uF	10%	25V	
C524	1-162-947-11	CERAMIC CHIP	33PF	5%	50V	
C525	1-162-954-11	CERAMIC CHIP	120PF	5%	50V	
C526	1-135-181-21	TANTALUM CHIP	4.7uF	20%	6.3V	
C528	1-164-156-11	CERAMIC CHIP	0.1uF		25V	
C530	1-162-970-11	CERAMIC CHIP	0.01uF	10%	25V	
C536	1-162-970-11	CERAMIC CHIP	0.01uF	10%	25V	
C537	1-135-181-21	TANTALUM CHIP	4.7uF	20%	6.3V	
C538	1-164-227-11	CERAMIC CHIP	0.022uF	10%	25V	
C539	1-162-970-11	CERAMIC CHIP	0.01uF	10%	25V	
C540	1-164-156-11	CERAMIC CHIP	0.1uF		25V	
C541	1-162-944-11	CERAMIC CHIP	18PF	5%	50V	
C545	1-135-157-21	TANTALUM CHIP	10uF	20%	6.3V	
C561	1-162-921-11	CERAMIC CHIP	33PF	5%	50V	
C562	1-164-160-11	CERAMIC CHIP	20PF	10%	50V	
C563	1-162-638-11	CERAMIC CHIP	1uF		16V	
C564	1-162-915-11	CERAMIC CHIP	10PF	0.5PF	50V	
C565	1-135-149-21	TANTALUM CHIP	2.2uF	20%	10V	
C566	1-135-149-21	TANTALUM CHIP	2.2uF	20%	10V	

When indicating parts by reference number, please include the board name.

Ref. No.	Part No.	Description			Remark
C567	1-135-157-21	TANTALUM CHIP	10uF	20% 6.3V	
C569	1-135-157-21	TANTALUM CHIP	10uF	20% 6.3V	
C570	1-164-156-11	CERAMIC CHIP	0.1uF	25V	
C571	1-164-227-11	CERAMIC CHIP	0.022uF	10% 25V	
C572	1-162-953-11	CERAMIC CHIP	100PF	5% 50V	
C611	1-162-974-11	CERAMIC CHIP	0.01uF	50V	
C612	1-162-974-11	CERAMIC CHIP	0.01uF	50V	
C613	1-164-156-11	CERAMIC CHIP	0.1uF	25V	
C614	1-135-157-21	TANTALUM CHIP	10uF	20% 6.3V	
C616	1-135-157-21	TANTALUM CHIP	10uF	20% 6.3V	
C617	1-162-974-11	CERAMIC CHIP	0.01uF	50V	
C618	1-135-157-21	TANTALUM CHIP	10uF	20% 6.3V	
C619	1-164-156-11	CERAMIC CHIP	0.1uF	25V	
C620	1-162-964-11	CERAMIC CHIP	0.001uF	10% 50V	
C621	1-162-941-11	CERAMIC CHIP	10PF 0.5PF	50V	
C623	1-162-957-11	CERAMIC CHIP	220PF	5% 50V	
C624	1-162-957-11	CERAMIC CHIP	220PF	5% 50V	
C625	1-162-928-11	CERAMIC CHIP	120PF	5% 50V	
C626	1-162-926-11	CERAMIC CHIP	82PF	5% 50V	
C627	1-164-156-11	CERAMIC CHIP	0.1uF	25V	
C628	1-164-156-11	CERAMIC CHIP	0.1uF	25V	
C629	1-164-156-11	CERAMIC CHIP	0.1uF	25V	
C631	1-162-966-11	CERAMIC CHIP	0.0022uF	10% 50V	
C633	1-164-156-11	CERAMIC CHIP	0.1uF	25V	
C634	1-164-156-11	CERAMIC CHIP	0.1uF	25V	
C636	1-164-005-11	CERAMIC CHIP	0.47uF	25V	
C637	1-135-180-21	TANTALUM CHIP	3.3uF	20% 6.3V	
C638	1-135-177-21	TANTALUM CHIP	1uF	20% 20V	
C643	1-162-957-11	CERAMIC CHIP	220PF	5% 50V	
C644	1-164-156-11	CERAMIC CHIP	0.1uF	25V	
C647	1-164-156-11	CERAMIC CHIP	0.1uF	25V	
C648	1-128-292-11	ELECT	220uF	20% 10V	
		< CONNECTOR >			
CN302	1-580-496-41	CONNECTOR, BOARD TO BOARD(R)14P			
CN304 *	1-565-543-11	PIN, CONNECTOR (PC BOARD) 4P			
CN802	1-568-366-41	CONNECTOR, BOARD TO BOARD 16P			
CN803	1-580-499-41	CONNECTOR, BOARD TO BOARD(R)20P			
CN804	1-568-366-41	CONNECTOR, BOARD TO BOARD 16P			
CN805	1-568-359-41	CONNECTOR, BOARD TO BOARD 20P			
CN806	1-568-367-41	CONNECTOR, BOARD TO BOARD 18P			
		< TRIMMER >			
CT141	1-141-331-11	CAP, CHIP TRIMMER 30PF			
CT142	1-141-331-11	CAP, CHIP TRIMMER 30PF			
CT143	1-141-356-11	CAP, ADJ 6PF			
		< DIODE >			
D101	8-719-404-46	DIODE MA110			
D102	8-719-404-46	DIODE MA110			

Ref. No.	Part No.	Description	Remark
D131	8-719-404-32	DIODE MA141WA	
D132	8-719-404-46	DIODE MA110	
D141	8-719-949-46	DIODE 1T32	
D142	8-719-949-46	DIODE 1T32	
D301	8-719-404-46	DIODE MA110	
D361	8-719-404-32	DIODE MA141WA	
D362	8-719-404-46	DIODE MA110	
D561	8-719-404-49	DIODE MA111	
D562 ⚠	8-719-420-51	DIODE MA729	
D563	8-719-404-46	DIODE MA110	
D611	8-719-404-32	DIODE MA141WA	
		< FILTER >	
FL181	1-236-266-11	FILTER, LOW PASS (YH)	
FL182	1-236-267-11	FILTER, LOW PASS (YDL)	
FL303	1-415-695-11	DL, LC	
FL501	1-236-589-11	B.P.F	
FL502	1-415-660-11	DL, LC	
FL503	1-236-450-11	LPF	
FL504	1-236-588-11	B.P.F	
FL610	1-236-209-11	FILTER, LOW PASS	
		< IC >	
IC141	8-752-335-85	IC CXD2109Q	
IC181	8-752-034-17	IC CXA1338R	
IC182	8-752-330-15	IC CXL1503N	
IC183	8-752-332-69	IC CXL5504M	
IC251	8-752-034-21	IC CXA1339R	
IC252	8-759-946-00	IC MB88341PFV	
IC253	8-752-039-49	IC CXA1393AN	
IC301	8-752-033-34	IC CXA1072R	
IC302	8-759-946-00	IC MB88341PFV	
IC361	8-759-037-60	IC MC68HC05N4-SC406667	
IC362	8-759-937-56	IC S-8054ALB-LM-S	
IC363	8-759-008-67	IC MC14066BF	
IC364	8-759-150-05	IC uPC324G2	
IC501	8-759-144-23	IC uPC1037GR	
IC502	8-759-144-23	IC uPC1037GR	
IC503	8-752-031-01	IC CXA1047M	
IC561	8-759-154-07	IC uPD7503GF-J59-3B8	
IC610	8-752-334-49	IC CXD1172AM	
IC611	8-759-502-04	IC MB88346PFV	
IC612	8-752-326-18	IC CXD1204R	
IC613	8-759-038-59	IC MC68HC05C4-SC403112	
IC615	8-759-100-94	IC uPC358G2	
IC616	8-759-234-77	IC TC4S66F	
		< COIL >	
L101	1-412-029-11	INDUCTOR CHIP 10uH	
L102	1-412-031-11	INDUCTOR CHIP 47uH	

The components identified by mark ⚠ or dotted line with mark ⚠ are critical for safety.
Replace only with part number specified.

When indicating parts by reference number, please include the board name.

Ref.No.	Part No.	Description	Remark
L141	1-410-391-11	INDUCTOR CHIP 68uH	
L142	1-410-381-11	INDUCTOR CHIP 10uH	
L182	1-410-381-11	INDUCTOR CHIP 10uH	
L183	1-410-381-11	INDUCTOR CHIP 10uH	
L251	1-410-381-11	INDUCTOR CHIP 10uH	
L303	1-410-204-31	INDUCTOR CHIP 10uH	
L304	1-410-392-11	INDUCTOR CHIP 82uH	
L361	1-410-381-11	INDUCTOR CHIP 10uH	
L401	1-410-192-51	INDUCTOR CHIP 1uH	
L402	1-410-192-51	INDUCTOR CHIP 1uH	
L403	1-412-026-11	INDUCTOR CHIP 1uH	
L404	1-410-192-51	INDUCTOR CHIP 1uH	
L501	1-410-381-11	INDUCTOR CHIP 10uH	
L502	1-410-658-31	INDUCTOR CHIP 220uH	
L503	1-410-388-21	INDUCTOR CHIP 39uH	
L509	1-410-381-11	INDUCTOR CHIP 10uH	
L561	1-410-369-11	INDUCTOR CHIP 1uH	
L610	1-410-381-11	INDUCTOR CHIP 10uH	
L611	1-410-389-31	INDUCTOR CHIP 47uH	
L612	1-410-655-31	INDUCTOR CHIP 120uH	
		< TRANSISTOR >	
Q101	8-729-907-47	TRANSISTOR IMZ1T108	
Q102	8-729-907-47	TRANSISTOR IMZ1T108	
Q106	8-729-602-36	TRANSISTOR 2SA1602	
Q107	8-729-907-47	TRANSISTOR IMZ1T108	
Q111	8-729-907-47	TRANSISTOR IMZ1T108	
Q112	8-729-907-47	TRANSISTOR IMZ1T108	
Q113	8-729-921-58	TRANSISTOR DTA144TU	
Q131	8-729-421-23	TRANSISTOR XN1216	
Q132	8-729-117-32	TRANSISTOR 2SC4177	
Q135	8-729-403-42	TRANSISTOR XN1401	
Q141	8-729-117-32	TRANSISTOR 2SC4177	
Q142	8-729-117-32	TRANSISTOR 2SC4177	
Q181	8-729-117-32	TRANSISTOR 2SC4177	
Q182	8-729-925-42	TRANSISTOR IMT2	
Q183	8-729-602-36	TRANSISTOR 2SA1602	
Q184	8-729-117-32	TRANSISTOR 2SC4177	
Q185	8-729-421-23	TRANSISTOR XN1216	
Q186	8-729-602-36	TRANSISTOR 2SA1602	
Q187	8-729-602-36	TRANSISTOR 2SA1602	
Q188	8-729-117-32	TRANSISTOR 2SC4177	
Q189	8-729-602-36	TRANSISTOR 2SA1602	
Q190	8-729-117-32	TRANSISTOR 2SC4177	
Q191	8-729-925-42	TRANSISTOR IMT2	
Q192	8-729-925-42	TRANSISTOR IMT2	
Q193	8-729-925-42	TRANSISTOR IMT2	
Q194	8-729-602-36	TRANSISTOR 2SA1602	
Q195	8-729-602-36	TRANSISTOR 2SA1602	
Q196	8-729-117-32	TRANSISTOR 2SC4177	

Ref.No.	Part No.	Description	Remark
Q255	8-729-907-47	TRANSISTOR IMZ1T108	
Q256	8-729-905-18	TRANSISTOR DTC144EU	
Q257	8-729-907-47	TRANSISTOR IMZ1T108	
Q302	8-729-602-36	TRANSISTOR 2SA1602	
Q303	8-729-602-36	TRANSISTOR 2SA1602	
Q305	8-729-117-32	TRANSISTOR 2SC4177	
Q307	8-729-402-81	TRANSISTOR XN4501	
Q310	8-729-117-32	TRANSISTOR 2SC4177	
Q311	8-729-117-32	TRANSISTOR 2SC4177	
Q312	8-729-117-32	TRANSISTOR 2SC4177	
Q313	8-729-403-42	TRANSISTOR XN1401	
Q314	8-729-907-47	TRANSISTOR IMZ1T108	
Q315	8-729-602-36	TRANSISTOR 2SA1602	
Q361	8-729-403-07	TRANSISTOR XN1213	
Q362	8-729-403-10	TRANSISTOR XN6215	
Q363	8-729-117-32	TRANSISTOR 2SC4177	
Q364	8-729-403-10	TRANSISTOR XN6215	
Q365	8-729-925-42	TRANSISTOR IMT2	
Q367	8-729-117-32	TRANSISTOR 2SC4177	
Q368	8-729-403-10	TRANSISTOR XN6215	
Q501	8-729-117-32	TRANSISTOR 2SC4177	
Q502	8-729-117-32	TRANSISTOR 2SC4177	
Q503	8-729-602-36	TRANSISTOR 2SA1602	
Q504	8-729-117-32	TRANSISTOR 2SC4177	
Q505	8-729-102-07	TRANSISTOR 2SC2223	
Q508	8-729-117-32	TRANSISTOR 2SC4177	
Q509	8-729-602-36	TRANSISTOR 2SA1602	
Q561	8-729-602-36	TRANSISTOR 2SA1602	
Q562	8-729-403-24	TRANSISTOR XN4210	
Q563	8-729-905-18	TRANSISTOR DTC144EU	
Q564	8-729-921-08	TRANSISTOR DTC144TU	
Q565	8-729-925-42	TRANSISTOR IMT2	
Q566	8-729-402-19	TRANSISTOR XN6501	
Q567	8-729-925-42	TRANSISTOR IMT2	
Q568	⚠ 8-729-109-44	TRANSISTOR 2SK94	
Q569	8-729-602-36	TRANSISTOR 2SA1602	
Q570	8-729-905-15	TRANSISTOR DTC144WU	
Q571	8-729-920-39	TRANSISTOR IMT1US	
Q572	8-729-805-25	TRANSISTOR 2SB1121	
Q573	8-729-905-18	TRANSISTOR DTC144EU	
Q610	8-729-403-10	TRANSISTOR XN6215	
Q612	8-729-921-08	TRANSISTOR DTC144TU	
Q613	8-729-117-32	TRANSISTOR 2SC4177	
Q614	8-729-117-32	TRANSISTOR 2SC4177	
Q619	8-729-117-32	TRANSISTOR 2SC4177	
Q620	8-729-117-32	TRANSISTOR 2SC4177	
Q621	8-729-402-19	TRANSISTOR XN6501	

The components identified by mark ⚠ or dotted line with mark ⚠ are critical for safety.
Replace only with part number specified.

When indicating parts by reference number, please include the board name.

VC-81P

Ref. No.	Part No.	Description				Remark
		< RESISTOR >				
R001	1-216-829-11	METAL CHIP	4.7K	5%	1/16W	
R002	1-216-825-11	METAL CHIP	2.2K	5%	1/16W	
R003	1-216-864-11	METAL CHIP	0			
R005	1-216-864-11	METAL CHIP	0			
R008	1-216-821-11	METAL CHIP	1K	5%	1/16W	
R011	1-216-825-11	METAL CHIP	2.2K	5%	1/16W	
R012	1-216-825-11	METAL CHIP	2.2K	5%	1/16W	
R013	1-216-825-11	METAL CHIP	2.2K	5%	1/16W	
R014	1-216-825-11	METAL CHIP	2.2K	5%	1/16W	
R015	1-216-825-11	METAL CHIP	2.2K	5%	1/16W	
R016	1-216-825-11	METAL CHIP	2.2K	5%	1/16W	
R018	1-216-813-11	METAL CHIP	220	5%	1/16W	
R020	1-216-813-11	METAL CHIP	220	5%	1/16W	
R051	1-216-864-11	METAL CHIP	0			
R052	1-216-835-11	METAL CHIP	15K	5%	1/16W	
R056	1-216-841-11	METAL CHIP	47K	5%	1/16W	
R058	1-216-839-11	METAL CHIP	33K	5%	1/16W	
R059	1-216-837-11	METAL CHIP	22K	5%	1/16W	
R063	1-216-837-11	METAL CHIP	22K	5%	1/16W	
R064	1-216-837-11	METAL CHIP	22K	5%	1/16W	
R065	1-216-835-11	METAL CHIP	15K	5%	1/16W	
R066	1-216-833-11	METAL CHIP	10K	5%	1/16W	
R067	1-216-837-11	METAL CHIP	22K	5%	1/16W	
R068	1-216-837-11	METAL CHIP	22K	5%	1/16W	
R069	1-216-833-11	METAL CHIP	10K	5%	1/16W	
R070	1-216-853-11	METAL CHIP	470K	5%	1/16W	
R075	1-216-864-11	METAL CHIP	0			
R102	1-216-833-11	METAL CHIP	10K	5%	1/16W	
R103	1-216-823-11	METAL CHIP	1.5K	5%	1/16W	
R104	1-216-835-11	METAL CHIP	15K	5%	1/16W	
R105	1-216-837-11	METAL CHIP	22K	5%	1/16W	
R107	1-216-820-11	METAL CHIP	820	5%	1/16W	
R108	1-216-839-11	METAL CHIP	33K	5%	1/16W	
R109	1-216-837-11	METAL CHIP	22K	5%	1/16W	
R111	1-216-822-11	METAL CHIP	1.2K	5%	1/16W	
R112	1-216-836-11	METAL CHIP	18K	5%	1/16W	
R116	1-216-836-11	METAL CHIP	18K	5%	1/16W	
R117	1-216-845-11	METAL CHIP	100K	5%	1/16W	
R118	1-216-837-11	METAL CHIP	22K	5%	1/16W	
R123	1-216-841-11	METAL CHIP	47K	5%	1/16W	
R128	1-216-864-11	METAL CHIP	0			
R129	1-216-864-11	METAL CHIP	0			
R133	1-216-844-11	METAL CHIP	82K	5%	1/16W	
R134	1-216-850-11	METAL CHIP	270K	5%	1/16W	
R135	1-216-833-11	METAL CHIP	10K	5%	1/16W	
R136	1-216-835-11	METAL CHIP	15K	5%	1/16W	
R137	1-216-857-11	METAL CHIP	1M	5%	1/16W	
R138	1-216-843-11	METAL CHIP	68K	5%	1/16W	
R141	1-216-821-11	METAL CHIP	1K	5%	1/16W	
R142	1-216-839-11	METAL CHIP	33K	5%	1/16W	
R143	1-216-864-11	METAL CHIP	0			
R144	1-216-827-11	METAL CHIP	3.3K	5%	1/16W	
R147	1-216-864-11	METAL CHIP	0			
R148	1-216-809-11	METAL CHIP	100	5%	1/16W	
R149	1-216-843-11	METAL CHIP	68K	5%	1/16W	
R150	1-216-857-11	METAL CHIP	1M	5%	1/16W	
R151	1-216-833-11	METAL CHIP	10K	5%	1/16W	
R152	1-216-845-11	METAL CHIP	100K	5%	1/16W	
R153	1-216-864-11	METAL CHIP	0			
R154	1-216-809-11	METAL CHIP	100	5%	1/16W	
R155	1-216-825-11	METAL CHIP	2.2K	5%	1/16W	
R156	1-216-823-11	METAL CHIP	1.5K	5%	1/16W	
R157	1-216-832-11	METAL CHIP	8.2K	5%	1/16W	
R158	1-216-828-11	METAL CHIP	3.9K	5%	1/16W	
R162	1-216-812-11	METAL CHIP	180	5%	1/16W	
R163	1-216-811-11	METAL CHIP	150	5%	1/16W	
R165	1-216-825-11	METAL CHIP	2.2K	5%	1/16W	
R166	1-216-821-11	METAL CHIP	1K	5%	1/16W	
R168	1-216-864-11	METAL CHIP	0			
R170	1-216-845-11	METAL CHIP	100K	5%	1/16W	
R171	1-216-833-11	METAL CHIP	10K	5%	1/16W	
R172	1-216-864-11	METAL CHIP	0			
R174	1-216-296-00	METAL CHIP	0	5%	1/8W	
R175	1-216-864-11	METAL CHIP	0			
R177	1-216-842-11	METAL CHIP	56K	5%	1/16W	
R178	1-216-835-11	METAL CHIP	15K	5%	1/16W	
R181	1-216-072-00	METAL CHIP	9.1K	5%	1/10W	
R182	1-216-822-11	METAL CHIP	1.2K	5%	1/16W	
R183	1-216-833-11	METAL CHIP	10K	5%	1/16W	
R184	1-216-837-11	METAL CHIP	22K	5%	1/16W	
R185	1-216-833-11	METAL CHIP	10K	5%	1/16W	
R186	1-216-821-11	METAL CHIP	1K	5%	1/16W	
R187	1-216-824-11	METAL CHIP	1.8K	5%	1/16W	
R188	1-216-812-11	METAL CHIP	180	5%	1/16W	
R189	1-216-820-11	METAL CHIP	820	5%	1/16W	
R190	1-216-825-11	METAL CHIP	2.2K	5%	1/16W	
R193	1-216-821-11	METAL CHIP	1K	5%	1/16W	
R194	1-216-820-11	METAL CHIP	820	5%	1/16W	
R195	1-216-829-11	METAL CHIP	4.7K	5%	1/16W	
R196	1-216-840-11	METAL CHIP	39K	5%	1/16W	
R197	1-216-839-11	METAL CHIP	33K	5%	1/16W	
R199	1-216-833-11	METAL CHIP	10K	5%	1/16W	
R200	1-216-833-11	METAL CHIP	10K	5%	1/16W	
R201	1-216-829-11	METAL CHIP	4.7K	5%	1/16W	
R202	1-216-823-11	METAL CHIP	1.5K	5%	1/16W	
R203	1-216-833-11	METAL CHIP	10K	5%	1/16W	
R204	1-216-836-11	METAL CHIP	18K	5%	1/16W	
R205	1-216-839-11	METAL CHIP	33K	5%	1/16W	
R206	1-216-839-11	METAL CHIP	33K	5%	1/16W	

When indicating parts by reference number, please include the board name.

Ref. No.	Part No.	Description				Remark
R207	1-216-839-11	METAL CHIP	33K	5%	1/16W	
R208	1-216-842-11	METAL CHIP	56K	5%	1/16W	
R209	1-216-840-11	METAL CHIP	39K	5%	1/16W	
R210	1-216-829-11	METAL CHIP	4.7K	5%	1/16W	
R211	1-216-821-11	METAL CHIP	1K	5%	1/16W	
R212	1-216-833-11	METAL CHIP	10K	5%	1/16W	
R213	1-216-825-11	METAL CHIP	2.2K	5%	1/16W	
R214	1-216-837-11	METAL CHIP	22K	5%	1/16W	
R215	1-216-833-11	METAL CHIP	10K	5%	1/16W	
R217	1-216-864-11	METAL CHIP	0			
R218	1-216-839-11	METAL CHIP	33K	5%	1/16W	
R219	1-216-841-11	METAL CHIP	47K	5%	1/16W	
R220	1-216-839-11	METAL CHIP	33K	5%	1/16W	
R221	1-216-839-11	METAL CHIP	33K	5%	1/16W	
R222	1-216-821-11	METAL CHIP	1K	5%	1/16W	
R223	1-216-857-11	METAL CHIP	1M	5%	1/16W	
R224	1-216-833-11	METAL CHIP	10K	5%	1/16W	
R225	1-216-832-11	METAL CHIP	8.2K	5%	1/16W	
R226	1-216-821-11	METAL CHIP	1K	5%	1/16W	
R229	1-216-828-11	METAL CHIP	3.9K	5%	1/16W	
R231	1-216-825-11	METAL CHIP	2.2K	5%	1/16W	
R233	1-216-823-11	METAL CHIP	1.5K	5%	1/16W	
R234	1-216-842-11	METAL CHIP	56K	5%	1/16W	
R235	1-216-671-11	METAL CHIP	6.8K	0.5%	1/10W	
R236	1-216-673-11	METAL CHIP	8.2K	0.5%	1/10W	
R237	1-216-683-11	METAL CHIP	22K	0.5%	1/10W	
R238	1-216-671-11	METAL CHIP	6.8K	0.5%	1/10W	
R239	1-216-659-11	METAL CHIP	2.2K	0.5%	1/10W	
R240	1-216-681-11	METAL CHIP	18K	0.5%	1/10W	
R241	1-216-842-11	METAL CHIP	56K	5%	1/16W	
R242	1-216-825-11	METAL CHIP	2.2K	5%	1/16W	
R243	1-216-825-11	METAL CHIP	2.2K	5%	1/16W	
R244	1-216-827-11	METAL CHIP	3.3K	5%	1/16W	
R245	1-216-825-11	METAL CHIP	2.2K	5%	1/16W	
R246	1-216-825-11	METAL CHIP	2.2K	5%	1/16W	
R267	1-216-833-11	METAL CHIP	10K	5%	1/16W	
R268	1-216-818-11	METAL CHIP	560	5%	1/16W	
R269	1-216-833-11	METAL CHIP	10K	5%	1/16W	
R270	1-216-833-11	METAL CHIP	10K	5%	1/16W	
R272	1-216-833-11	METAL CHIP	10K	5%	1/16W	
R273	1-216-833-11	METAL CHIP	10K	5%	1/16W	
R274	1-216-818-11	METAL CHIP	560	5%	1/16W	
R275	1-216-833-11	METAL CHIP	10K	5%	1/16W	
R276	1-216-833-11	METAL CHIP	10K	5%	1/16W	
R277	1-216-834-11	METAL CHIP	12K	5%	1/16W	
R278	1-216-843-11	METAL CHIP	68K	5%	1/16W	
R295	1-216-864-11	METAL CHIP	0			
R296	1-216-864-11	METAL CHIP	0			
R301	1-216-821-11	METAL CHIP	1K	5%	1/16W	
R302	1-216-822-11	METAL CHIP	1.2K	5%	1/16W	
R303	1-216-821-11	METAL CHIP	1K	5%	1/16W	
R304	1-216-839-11	METAL CHIP	33K	5%	1/16W	
R305	1-216-864-11	METAL CHIP	0			
R307	1-216-837-11	METAL CHIP	22K	5%	1/16W	
R310	1-216-864-11	METAL CHIP	0			
R311	1-216-845-11	METAL CHIP	100K	5%	1/16W	
R312	1-216-843-11	METAL CHIP	68K	5%	1/16W	
R313	1-216-843-11	METAL CHIP	68K	5%	1/16W	
R314	1-216-816-11	METAL CHIP	390	5%	1/16W	
R315	1-216-823-11	METAL CHIP	1.5K	5%	1/16W	
R316	1-216-825-11	METAL CHIP	2.2K	5%	1/16W	
R318	1-216-837-11	METAL CHIP	22K	5%	1/16W	
R319	1-216-839-11	METAL CHIP	33K	5%	1/16W	
R320	1-216-839-11	METAL CHIP	33K	5%	1/16W	
R321	1-216-864-11	METAL CHIP	0			
R322	1-216-832-11	METAL CHIP	8.2K	5%	1/16W	
R323	1-216-830-11	METAL CHIP	5.6K	5%	1/16W	
R331	1-216-821-11	METAL CHIP	1K	5%	1/16W	
R332	1-216-827-11	METAL CHIP	3.3K	5%	1/16W	
R337	1-216-675-11	METAL CHIP	10K	0.5%	1/10W	
R338	1-216-838-11	METAL CHIP	27K	5%	1/16W	
R339	1-216-831-11	METAL CHIP	6.8K	5%	1/16W	
R341	1-216-833-11	METAL CHIP	10K	5%	1/16W	
R342	1-216-828-11	METAL CHIP	3.9K	5%	1/16W	
R347	1-216-841-11	METAL CHIP	47K	5%	1/16W	
R348	1-216-841-11	METAL CHIP	47K	5%	1/16W	
R349	1-216-829-11	METAL CHIP	4.7K	5%	1/16W	
R350	1-216-845-11	METAL CHIP	100K	5%	1/16W	
R351	1-216-864-11	METAL CHIP	0			
R352	1-216-835-11	METAL CHIP	15K	5%	1/16W	
R353	1-216-864-11	METAL CHIP	0			
R355	1-216-864-11	METAL CHIP	0			
R356	1-216-837-11	METAL CHIP	22K	5%	1/16W	
R357	1-216-849-11	METAL CHIP	220K	5%	1/16W	
R358	1-216-829-11	METAL CHIP	4.7K	5%	1/16W	
R359	1-216-829-11	METAL CHIP	4.7K	5%	1/16W	
R361	1-216-833-11	METAL CHIP	10K	5%	1/16W	
R362	1-216-833-11	METAL CHIP	10K	5%	1/16W	
R364	1-216-833-11	METAL CHIP	10K	5%	1/16W	
R365	1-216-864-11	METAL CHIP	0			
R366	1-216-857-11	METAL CHIP	1M	5%	1/16W	
R367	1-216-845-11	METAL CHIP	100K	5%	1/16W	
R368	1-216-833-11	METAL CHIP	10K	5%	1/16W	
R369	1-216-833-11	METAL CHIP	10K	5%	1/16W	
R370	1-216-837-11	METAL CHIP	22K	5%	1/16W	
R371	1-216-833-11	METAL CHIP	10K	5%	1/16W	
R372	1-216-825-11	METAL CHIP	2.2K	5%	1/16W	
R373	1-216-823-11	METAL CHIP	1.5K	5%	1/16W	
R374	1-216-845-11	METAL CHIP	100K	5%	1/16W	
R375	1-216-840-11	METAL CHIP	39K	5%	1/16W	

When indicating parts by reference number, please include the board name.

Ref. No.	Part No.	Description				Remark
R376	1-216-833-11	METAL CHIP	10K	5%	1/16W	
R377	1-216-845-11	METAL CHIP	100K	5%	1/16W	
R378	1-216-833-11	METAL CHIP	10K	5%	1/16W	
R382	1-216-845-11	METAL CHIP	100K	5%	1/16W	
R383	1-216-829-11	METAL CHIP	4.7K	5%	1/16W	
R384	1-216-833-11	METAL CHIP	10K	5%	1/16W	
R385	1-216-833-11	METAL CHIP	10K	5%	1/16W	
R386	1-216-833-11	METAL CHIP	10K	5%	1/16W	
R388	1-216-853-11	METAL CHIP	470K	5%	1/16W	
R391	1-216-825-11	METAL CHIP	2.2K	5%	1/16W	
R392	1-216-838-11	METAL CHIP	27K	5%	1/16W	
R394	1-216-833-11	METAL CHIP	10K	5%	1/16W	
R395	1-216-837-11	METAL CHIP	22K	5%	1/16W	
R397	1-216-864-11	METAL CHIP	0			
R398	1-216-827-11	METAL CHIP	3.3K	5%	1/16W	
R401	1-216-821-11	METAL CHIP	1K	5%	1/16W	
R402	1-216-825-11	METAL CHIP	2.2K	5%	1/16W	
R403	1-216-827-11	METAL CHIP	3.3K	5%	1/16W	
R404	1-216-849-11	METAL CHIP	220K	5%	1/16W	
R405	1-216-825-11	METAL CHIP	2.2K	5%	1/16W	
R406	1-216-833-11	METAL CHIP	10K	5%	1/16W	
R407	1-216-864-11	METAL CHIP	0			
R408	1-216-825-11	METAL CHIP	2.2K	5%	1/16W	
R409	1-216-821-11	METAL CHIP	1K	5%	1/16W	
R410	1-216-821-11	METAL CHIP	1K	5%	1/16W	
R412	1-216-821-11	METAL CHIP	1K	5%	1/16W	
R413	1-216-813-11	METAL CHIP	220	5%	1/16W	
R414	1-216-825-11	METAL CHIP	2.2K	5%	1/16W	
R415	1-216-813-11	METAL CHIP	220	5%	1/16W	
R417	1-216-825-11	METAL CHIP	2.2K	5%	1/16W	
R418	1-216-864-11	METAL CHIP	0			
R422	1-216-825-11	METAL CHIP	2.2K	5%	1/16W	
R424	1-216-832-11	METAL CHIP	8.2K	5%	1/16W	
R425	1-216-821-11	METAL CHIP	1K	5%	1/16W	
R426	1-216-821-11	METAL CHIP	1K	5%	1/16W	
R427	1-216-821-11	METAL CHIP	1K	5%	1/16W	
R428	1-216-821-11	METAL CHIP	1K	5%	1/16W	
R429	1-216-821-11	METAL CHIP	1K	5%	1/16W	
R430	1-216-821-11	METAL CHIP	1K	5%	1/16W	
R441	1-216-821-11	METAL CHIP	1K	5%	1/16W	
R442	1-216-825-11	METAL CHIP	2.2K	5%	1/16W	
R443	1-216-864-11	METAL CHIP	0			
R503	1-216-821-11	METAL CHIP	1K	5%	1/16W	
R505	1-216-819-11	METAL CHIP	680	5%	1/16W	
R506	1-216-829-11	METAL CHIP	4.7K	5%	1/16W	
R507	1-216-837-11	METAL CHIP	22K	5%	1/16W	
R508	1-216-821-11	METAL CHIP	1K	5%	1/16W	
R509	1-216-820-11	METAL CHIP	820	5%	1/16W	
R510	1-216-821-11	METAL CHIP	1K	5%	1/16W	
R511	1-216-820-11	METAL CHIP	820	5%	1/16W	

Ref. No.	Part No.	Description				Remark
R512	1-216-835-11	METAL CHIP	15K	5%	1/16W	
R513	1-216-842-11	METAL CHIP	56K	5%	1/16W	
R514	1-216-823-11	METAL CHIP	1.5K	5%	1/16W	
R515	1-216-821-11	METAL CHIP	1K	5%	1/16W	
R516	1-216-826-11	METAL CHIP	2.7K	5%	1/16W	
R517	1-216-831-11	METAL CHIP	6.8K	5%	1/16W	
R518	1-216-677-11	METAL CHIP	12K	0.5%	1/10W	
R519	1-216-671-11	METAL CHIP	6.8K	0.5%	1/10W	
R520	1-216-679-11	METAL CHIP	15K	0.5%	1/10W	
R521	1-216-679-11	METAL CHIP	15K	0.5%	1/10W	
R522	1-216-827-11	METAL CHIP	3.3K	5%	1/16W	
R523	1-216-827-11	METAL CHIP	3.3K	5%	1/16W	
R524	1-216-833-11	METAL CHIP	10K	5%	1/16W	
R525	1-216-853-11	METAL CHIP	470K	5%	1/16W	
R526	1-216-817-11	METAL CHIP	470	5%	1/16W	
R527	1-216-823-11	METAL CHIP	1.5K	5%	1/16W	
R528	1-216-827-11	METAL CHIP	3.3K	5%	1/16W	
R529	1-216-817-11	METAL CHIP	470	5%	1/16W	
R530	1-216-822-11	METAL CHIP	1.2K	5%	1/16W	
R531	1-216-818-11	METAL CHIP	560	5%	1/16W	
R532	1-216-857-11	METAL CHIP	1M	5%	1/16W	
R533	1-216-835-11	METAL CHIP	15K	5%	1/16W	
R534	1-216-817-11	METAL CHIP	470	5%	1/16W	
R535	1-216-830-11	METAL CHIP	5.6K	5%	1/16W	
R541	1-216-821-11	METAL CHIP	1K	5%	1/16W	
R543	1-216-821-11	METAL CHIP	1K	5%	1/16W	
R547	1-216-823-11	METAL CHIP	1.5K	5%	1/16W	
R548	1-216-829-11	METAL CHIP	4.7K	5%	1/16W	
R549	1-216-819-11	METAL CHIP	680	5%	1/16W	
R550	1-216-822-11	METAL CHIP	1.2K	5%	1/16W	
R551	1-216-821-11	METAL CHIP	1K	5%	1/16W	
R552	1-216-826-11	METAL CHIP	2.7K	5%	1/16W	
R560	1-216-821-11	METAL CHIP	1K	5%	1/16W	
R561	1-216-849-11	METAL CHIP	220K	5%	1/16W	
R562	1-216-845-11	METAL CHIP	100K	5%	1/16W	
R563	1-216-845-11	METAL CHIP	100K	5%	1/16W	
R564	1-216-851-11	METAL CHIP	330K	5%	1/16W	
R565	1-216-841-11	METAL CHIP	47K	5%	1/16W	
R566	1-216-845-11	METAL CHIP	100K	5%	1/16W	
R567	1-216-857-11	METAL CHIP	1M	5%	1/16W	
R568	1-216-097-00	METAL CHIP	100K	5%	1/10W	
R569	1-216-852-11	METAL CHIP	390K	5%	1/16W	
R570	1-216-857-11	METAL CHIP	1M	5%	1/16W	
R571	1-216-845-11	METAL CHIP	100K	5%	1/16W	
R572	1-216-845-11	METAL CHIP	100K	5%	1/16W	
R573	1-216-851-11	METAL CHIP	330K	5%	1/16W	
R574	⚠ 1-216-809-11	METAL CHIP	100	5%	1/16W	
R575	1-216-861-11	METAL CHIP	2.2M	5%	1/16W	
R576	1-216-839-11	METAL CHIP	33K	5%	1/16W	
R577	1-216-843-11	METAL CHIP	68K	5%	1/16W	

The components identified by mark ⚠ or dotted line with mark ⚠ are critical for safety.
Replace only with part number specified.

When indicating parts by reference number, please include the board name.

Ref.No.	Part No.	Description				Remark
R578	1-216-136-00	METAL GLAZE	2.7	5%	1/8W	
R579	1-216-828-11	METAL CHIP	3.9K	5%	1/16W	
R580	1-216-822-11	METAL CHIP	1.2K	5%	1/16W	
R581	1-216-831-11	METAL CHIP	6.8K	5%	1/16W	
R582	1-216-825-11	METAL CHIP	2.2K	5%	1/16W	
R583	1-218-172-11	METAL CHIP	680K	1%	1/10W	
R584	1-218-172-11	METAL CHIP	680K	1%	1/10W	
R585	1-216-836-11	METAL CHIP	18K	5%	1/16W	
R587	1-216-807-11	METAL CHIP	68	5%	1/16W	
R589	1-216-864-11	METAL CHIP	0			
R611	1-216-864-11	METAL CHIP	0			
R617	1-216-864-11	METAL CHIP	0			
R618	1-216-829-11	METAL CHIP	4.7K	5%	1/16W	
R619	1-216-857-11	METAL CHIP	1M	5%	1/16W	
R620	1-216-833-11	METAL CHIP	10K	5%	1/16W	
R621	1-216-857-11	METAL CHIP	1M	5%	1/16W	
R623	1-216-829-11	METAL CHIP	4.7K	5%	1/16W	
R624	1-216-829-11	METAL CHIP	4.7K	5%	1/16W	
R631	1-216-844-11	METAL CHIP	82K	5%	1/16W	
R632	1-216-819-11	METAL CHIP	680	5%	1/16W	
R633	1-216-825-11	METAL CHIP	2.2K	5%	1/16W	
R634	1-216-821-11	METAL CHIP	1K	5%	1/16W	
R635	1-216-854-11	METAL CHIP	560K	5%	1/16W	
R636	1-216-825-11	METAL CHIP	2.2K	5%	1/16W	
R637	1-216-820-11	METAL CHIP	820	5%	1/16W	
R638	1-216-831-11	METAL CHIP	6.8K	5%	1/16W	
R639	1-216-830-11	METAL CHIP	5.6K	5%	1/16W	
R640	1-216-827-11	METAL CHIP	3.3K	5%	1/16W	
R641	1-216-818-11	METAL CHIP	560	5%	1/16W	
R642	1-216-833-11	METAL CHIP	10K	5%	1/16W	
R643	1-216-821-11	METAL CHIP	1K	5%	1/16W	
R644	1-216-824-11	METAL CHIP	1.8K	5%	1/16W	
R645	1-216-830-11	METAL CHIP	5.6K	5%	1/16W	
R646	1-216-845-11	METAL CHIP	100K	5%	1/16W	
R647	1-216-821-11	METAL CHIP	1K	5%	1/16W	
R649	1-216-685-11	METAL CHIP	27K	0.5%	1/10W	
R650	1-216-675-11	METAL CHIP	10K	0.5%	1/10W	
R651	1-216-675-11	METAL CHIP	10K	0.5%	1/10W	
R653	1-216-847-11	METAL CHIP	150K	5%	1/16W	
R654	1-216-864-11	METAL CHIP	0			
R656	1-216-828-11	METAL CHIP	3.9K	5%	1/16W	
R657	1-216-818-11	METAL CHIP	560	5%	1/16W	
R659	1-216-844-11	METAL CHIP	82K	5%	1/16W	
R661	1-216-813-11	METAL CHIP	220	5%	1/16W	
R662	1-216-813-11	METAL CHIP	220	5%	1/16W	
R663	1-216-813-11	METAL CHIP	220	5%	1/16W	
R664	1-216-827-11	METAL CHIP	3.3K	5%	1/16W	
R665	1-216-830-11	METAL CHIP	5.6K	5%	1/16W	

Ref.No.	Part No.	Description	Remark
		< NETWORK RESISTER >	
RB101	1-236-424-11	NETWORK, RES 10K	
RB141	1-236-416-11	NETWORK, RES 2.2K	
RB181	1-236-414-11	NETWORK, RES 1.5K	
RB182	1-236-412-11	NETWORK, RES 1.0K	
RB183	1-236-420-11	NETWORK, RES 4.7K	
RB184	1-236-420-11	NETWORK, RES 4.7K	
RB252	1-236-409-11	NETWORK, RES 560	
RB253	1-236-409-11	NETWORK, RES 560	
RB301	1-236-412-11	NETWORK, RES 1.0K	
RB362	1-236-436-11	NETWORK, RES 100K	
RB363	1-236-424-11	NETWORK, RES 10K	
RB561	1-236-436-11	NETWORK, RES 100K	
RB562	1-236-436-11	NETWORK, RES 100K	
RB563	1-236-412-11	NETWORK, RES 1.0K	
RB564	1-236-436-11	NETWORK, RES 100K	
RB565	1-236-436-11	NETWORK, RES 100K	
RB566	1-236-436-11	NETWORK, RES 100K	
RB567	1-236-412-11	NETWORK, RES 1.0K	
RB569	1-236-412-11	NETWORK, RES 1.0K	
RB570	1-236-432-11	NETWORK, RES 47K	
RB571	1-236-412-11	NETWORK, RES 1.0K	
RB572	1-236-412-11	NETWORK, RES 1.0K	
RB574	1-236-436-11	NETWORK, RES 100K	
RB575	1-236-436-11	NETWORK, RES 100K	
RB576	1-236-424-11	NETWORK, RES 10K	
RB577	1-236-424-11	NETWORK, RES 10K	
RB611	1-236-424-11	NETWORK, RES 10K	
RB613	1-236-436-11	NETWORK, RES 100K	
RB614	1-236-424-11	NETWORK, RES 10K	
		< VARIABLE RESISTOR >	
RV501	1-238-089-11	RES, ADJ CERMET4.7K	
RV501	1-238-855-11	RES, ADJ CERMET 4.7K	
RV502	1-238-089-11	RES, ADJ CERMET4.7K	
RV502	1-238-855-11	RES, ADJ CERMET 4.7K	
RV503	1-238-088-11	RES, ADJ CERMET 2.2K	
RV503	1-238-854-11	RES, ADJ CERMET 2.2K	
RV504	1-238-087-11	RES, ADJ CERMET1K	
RV504	1-238-853-11	RES, ADJ CERMET 1K	
RV505	1-238-087-11	RES, ADJ CERMET1K	
RV505	1-238-853-11	RES, ADJ CERMET 1K	
RV561	1-238-093-11	RES, ADJ CERMET100K	
RV561	1-238-859-11	RES, ADJ CERMET 100K	
		< CRYSTAL >	
X101	1-579-076-11	VIBRATOR, CRYSTAL (28.375 MHz)	
X141	1-567-733-11	VIBRATOR, CRYSTAL (17 MHz)	
X361	1-577-118-11	VIBRATOR, LITHIUM NIOBATE	

When indicating parts by reference number, please include the board name.

Ref. No.	Part No.	Description			Remark
X561	1-579-049-21	VIBRATOR, CRYSTAL (32.768 kHz)			
**********					
	* A-7062-629-A	VF-41 (P) BOARD, COMPLETE			
		**********			
					(Ref.No. 3000 Series)
	* 3-749-728-01	SHEET, INSULATING			
	* 3-747-126-01	HOLDER, LED			
		< CAPACITOR >			
C951	1-126-176-11	ELECT	220uF	20%	10V
C952	1-163-077-00	CERAMIC CHIP	0.1uF	10%	25V
C954	1-135-091-00	TANTALUM CHIP	1uF	20%	16V
C955	1-163-037-11	CERAMIC CHIP	0.022uF	10%	25V
C956	1-131-381-00	TANTALUM	47uF	10%	10V
C957	1-162-638-11	CERAMIC CHIP	1uF		16V
C958	1-136-718-11	FILM, CHIP	0.1uF	5%	25V
C959	1-163-115-00	CERAMIC CHIP	82PF	5%	50V
C960	1-127-515-11	ELECT(SOLID)	47uF	20%	6.3V
C961	⚠ 1-163-009-11	CERAMIC CHIP	0.001uF	10%	50V
C962	⚠ 1-162-625-11	CERAMIC CHIP	0.0047uF	5%	50V
C963	⚠ 1-163-012-00	CERAMIC CHIP	0.0018uF	10%	50V
C964	1-126-090-11	ELECT	82uF	20%	10V
C965	1-124-257-00	ELECT	2.2uF	20%	50V
C966	1-163-037-11	CERAMIC CHIP	0.022uF	10%	25V
C967	1-164-611-11	CERAMIC CHIP	0.001uF	10%	500V
C968	⚠ 1-162-625-11	CERAMIC CHIP	0.0047uF	5%	50V
		< CONNECTOR >			
CN951	* 1-566-759-11	PIN, CONNECTOR (PC BOARD) 4P			
CN952	* 1-566-195-11	PIN, CONNECTOR (PC BOARD) 2P			
CN953	* 1-566-195-11	PIN, CONNECTOR (PC BOARD) 2P			
		< DIODE >			
D951	8-719-820-65	DIODE TLS221			
D952	8-719-800-60	LED TLR214 (RED)			
D953	8-719-400-20	DIODE MA152WA			
D954	8-719-420-15	DIODE MA8082-M			
		< IC >			
IC951	8-759-420-01	IC AN2512S			
		< COIL >			
L951	1-412-031-11	INDUCTOR CHIP 47uH			
L952	1-408-781-00	INDUCTOR CHIP 22uH			
L953	⚠ 1-459-876-41	COIL, FERRITE (HLC)			
		< TRANSISTOR >			
Q951	8-729-216-31	TRANSISTOR 2SA1163G			
Q952	8-729-106-68	TRANSISTOR 2SD1615A-GP			
		< RESISTOR >			
R951	1-216-041-00	METAL CHIP	470	5%	1/10W
R953	1-216-041-00	METAL CHIP	470	5%	1/10W
R955	1-216-063-00	METAL CHIP	3.9K	5%	1/10W
R956	1-216-063-00	METAL CHIP	3.9K	5%	1/10W
R957	1-216-061-00	METAL CHIP	3.3K	5%	1/10W
R958	1-216-097-00	METAL CHIP	100K	5%	1/10W
R959	1-216-113-00	METAL CHIP	470K	5%	1/10W
R960	1-216-053-00	METAL CHIP	1.5K	5%	1/10W
R962	1-216-336-11	METAL CHIP	47K	1%	1/10W
R963	1-216-107-00	METAL CHIP	270K	5%	1/10W
R964	1-216-025-00	METAL CHIP	100	5%	1/10W
R965	1-216-308-00	METAL CHIP	4.7	5%	1/10W
R966	1-216-055-00	METAL CHIP	1.8K	5%	1/10W
R967	1-216-121-00	METAL CHIP	1M	5%	1/10W
R968	1-216-031-00	METAL CHIP	180	5%	1/10W
R969	1-216-079-00	METAL CHIP	18K	5%	1/10W
R971	1-216-870-11	METAL CHIP	180K	1%	1/10W
R973	1-216-005-00	METAL CHIP	15	5%	1/10W
R974	1-216-133-00	METAL CHIP	3.3M	5%	1/10W
R975	1-216-133-00	METAL CHIP	3.3M	5%	1/10W
R976	1-216-125-00	METAL CHIP	1.5M	5%	1/10W
R977	1-216-121-00	METAL CHIP	1M	5%	1/10W
R978	1-216-011-00	METAL CHIP	27	5%	1/10W
		< VARIABLE RESISTOR >			
RV951	1-238-092-11	RES, ADJ CERMET 47K			
RV952	1-238-086-11	RES, ADJ CERMET 470			
RV952	1-238-852-11	RES, ADJ CERMET 470			
RV953	1-238-088-11	RES, ADJ CERMET 2.2K			
RV953	1-238-854-11	RES, ADJ CERMET 2.2K			
RV954	1-238-647-11	RES, ADJ METAL GLAZE 4.7M			
RV955	1-238-096-11	RES, ADJ CERMET 1M			
		< TRANSFORMER >			
T951	⚠ 1-439-494-11	TRANSFORMER ASSY, FLYBACK			
		< THERMISTOR >			
TH951	1-807-938-11	THERMISTOR			
		< SOCKET >			
W951	⚠ 1-526-978-31	SOCKET ASSY, CRT			
**********					

The components identified by mark ⚠ or dotted line with mark ⚠ are critical for safety. Replace only with part number specified.

When indicating parts by reference number, please include the board name.

Ref. No.	Part No.	Description			Remark
	* A-7062-622-A	VS-69 BOARD, COMPLETE			
		**********			
					(Ref. No. 2000 Series)
	1-636-499-11	FP363 FLEXIBLE BOARD			
	1-636-501-11	FP355 FLEXIBLE BOARD			
	* 3-736-316-01	CASE (UPPER), RP SHIELD			
	* 3-736-317-01	CASE (LOWER), RP SHIELD			
	* 3-736-322-01	CASE, FE SHIELD			
	* 3-736-887-01	PLATE, SHIELD, PAL DELAY LINE			
		< CAPACITOR >			
C101	1-162-964-11	CERAMIC CHIP	0.001uF	10%	50V
C102	1-135-157-21	TANTALUM CHIP	10uF	20%	6.3V
C104	1-135-157-21	TANTALUM CHIP	10uF	20%	6.3V
C107	1-163-809-11	CERAMIC CHIP	0.047uF	10%	25V
C108	1-135-161-21	TANTALUM CHIP	22uF	10%	6.3V
C111	1-164-633-11	CERAMIC CHIP	0.1uF	10%	25V
C112	1-164-633-11	CERAMIC CHIP	0.1uF	10%	25V
C123	1-162-970-11	CERAMIC CHIP	0.01uF	10%	25V
C125	1-164-633-11	CERAMIC CHIP	0.1uF	10%	25V
C126	1-162-970-11	CERAMIC CHIP	0.01uF	10%	25V
C127	1-162-970-11	CERAMIC CHIP	0.01uF	10%	25V
C128	1-162-970-11	CERAMIC CHIP	0.01uF	10%	25V
C131	1-163-809-11	CERAMIC CHIP	0.047uF	10%	25V
C132	1-135-161-21	TANTALUM CHIP	22uF	10%	6.3V
C135	1-164-633-11	CERAMIC CHIP	0.1uF	10%	25V
C136	1-164-633-11	CERAMIC CHIP	0.1uF	10%	25V
C147	1-162-970-11	CERAMIC CHIP	0.01uF	10%	25V
C149	1-164-633-11	CERAMIC CHIP	0.1uF	10%	25V
C150	1-162-970-11	CERAMIC CHIP	0.01uF	10%	25V
C151	1-162-970-11	CERAMIC CHIP	0.01uF	10%	25V
C152	1-162-970-11	CERAMIC CHIP	0.01uF	10%	25V
C162	1-164-633-11	CERAMIC CHIP	0.1uF	10%	25V
C163	1-162-970-11	CERAMIC CHIP	0.01uF	10%	25V
C164	1-135-161-21	TANTALUM CHIP	22uF	10%	6.3V
C165	1-162-948-11	CERAMIC CHIP	39PF	5%	50V
C166	1-162-963-11	CERAMIC CHIP	680PF	10%	50V
C167	1-162-970-11	CERAMIC CHIP	0.01uF	10%	25V
C168	1-162-970-11	CERAMIC CHIP	0.01uF	10%	25V
C169	1-162-970-11	CERAMIC CHIP	0.01uF	10%	25V
C170	1-135-157-21	TANTALUM CHIP	10uF	20%	6.3V
C171	1-163-809-11	CERAMIC CHIP	0.047uF	10%	25V
C172	1-163-809-11	CERAMIC CHIP	0.047uF	10%	25V
C173	1-162-970-11	CERAMIC CHIP	0.01uF	10%	25V
C174	1-135-177-21	TANTALUM CHIP	1uF	20%	20V
C175	1-163-809-11	CERAMIC CHIP	0.047uF	10%	25V
C176	1-162-970-11	CERAMIC CHIP	0.01uF	10%	25V
C177	1-163-809-11	CERAMIC CHIP	0.047uF	10%	25V
C178	1-163-809-11	CERAMIC CHIP	0.047uF	10%	25V
C179	1-135-177-21	TANTALUM CHIP	1uF	20%	20V

Ref. No.	Part No.	Description			Remark
C180	1-163-809-11	CERAMIC CHIP	0.047uF	10%	25V
C181	1-135-157-21	TANTALUM CHIP	10uF	20%	6.3V
C182	1-163-809-11	CERAMIC CHIP	0.047uF	10%	25V
C183	1-135-161-21	TANTALUM CHIP	22uF	10%	6.3V
C184	1-162-970-11	CERAMIC CHIP	0.01uF	10%	25V
C185	1-162-970-11	CERAMIC CHIP	0.01uF	10%	25V
C186	1-162-970-11	CERAMIC CHIP	0.01uF	10%	25V
C187	1-162-918-11	CERAMIC CHIP	18PF	5%	50V
C188	1-162-918-11	CERAMIC CHIP	18PF	5%	50V
C192	1-163-038-00	CERAMIC CHIP	0.1uF		25V
C193	1-162-953-11	CERAMIC CHIP	100PF	5%	50V
C194	1-162-927-11	CERAMIC CHIP	100PF	5%	50V
C195	1-162-927-11	CERAMIC CHIP	100PF	5%	50V
C196	1-164-217-11	CERAMIC CHIP	150PF	0.25PF	50V
C197	1-163-809-11	CERAMIC CHIP	0.047uF	10%	25V
C201	1-135-145-11	TANTALUM CHIP	0.47uF	10%	25V
C203	1-126-205-11	ELECT CHIP	47uF	20%	6.3V
C204	1-124-779-00	ELECT CHIP	10uF	20%	16v
C205	1-164-156-11	CERAMIC CHIP	0.1uF		25V
C206	1-135-157-21	TANTALUM CHIP	10uF	20%	6.3V
C207	1-126-246-11	ELECT CHIP	220uF	20%	4V
C208	1-162-974-11	CERAMIC CHIP	0.01uF		50V
C209	1-135-157-21	TANTALUM CHIP	10uF	20%	6.3V
C210	1-162-970-11	CERAMIC CHIP	0.01uF	10%	25V
C211	1-135-149-21	TANTALUM CHIP	2.2uF	20%	10V
C212	1-135-146-21	TANTALUM CHIP	0.68uF	20%	25V
C213	1-162-970-11	CERAMIC CHIP	0.01uF	10%	25V
C214	1-135-157-21	TANTALUM CHIP	10uF	20%	6.3V
C215	1-162-970-11	CERAMIC CHIP	0.01uF	10%	25V
C216	1-135-157-21	TANTALUM CHIP	10uF	20%	6.3V
C217	1-135-145-11	TANTALUM CHIP	0.47uF	10%	25V
C218	1-135-157-21	TANTALUM CHIP	10uF	20%	6.3V
C219	1-162-970-11	CERAMIC CHIP	0.01uF	10%	25V
C220	1-162-970-11	CERAMIC CHIP	0.01uF	10%	25V
C221	1-162-964-11	CERAMIC CHIP	0.001uF	10%	50V
C222	1-162-970-11	CERAMIC CHIP	0.01uF	10%	25V
C223	1-162-970-11	CERAMIC CHIP	0.01uF	10%	25V
C224	1-162-638-11	CERAMIC CHIP	1uF		16V
C227	1-162-638-11	CERAMIC CHIP	1uF		16V
C229	1-162-638-11	CERAMIC CHIP	1uF		16V
C230	1-162-638-11	CERAMIC CHIP	1uF		16V
C232	1-162-638-11	CERAMIC CHIP	1uF		16V
C233	1-135-180-21	TANTALUM CHIP	3.3uF	20%	6.3V
C234	1-162-970-11	CERAMIC CHIP	0.01uF	10%	25V
C235	1-162-638-11	CERAMIC CHIP	1uF		16V
C236	1-135-157-21	TANTALUM CHIP	10uF	20%	6.3V
C237	1-162-638-11	CERAMIC CHIP	1uF		16V
C238	1-162-638-11	CERAMIC CHIP	1uF		16V
C239	1-135-157-21	TANTALUM CHIP	10uF	20%	6.3V
C240	1-135-157-21	TANTALUM CHIP	10uF	20%	6.3V

When indicating parts by reference number, please include the board name.

Ref. No.	Part No.	Description			Remark
C241	1-164-156-11	CERAMIC CHIP	0.1uF	25V	
C242	1-135-180-21	TANTALUM CHIP	3.3uF 20%	6.3V	
C243	1-135-157-21	TANTALUM CHIP	10uF 20%	6.3V	
C244	1-162-638-11	CERAMIC CHIP	1uF	16V	
C245	1-162-974-11	CERAMIC CHIP	0.01uF	50V	
C246	1-135-180-21	TANTALUM CHIP	3.3uF 20%	6.3V	
C247	1-164-156-11	CERAMIC CHIP	0.1uF	25V	
C248	1-135-070-00	TANTALUM CHIP	0.1uF 10%	35V	
C249	1-162-638-11	CERAMIC CHIP	1uF	16V	
C250	1-162-951-11	CERAMIC CHIP	68PF 5%	50V	
C251	1-162-953-11	CERAMIC CHIP	100PF 5%	50V	
C252	1-162-937-11	CERAMIC CHIP	6PF 0.5PF	50V	
C253	1-162-970-11	CERAMIC CHIP	0.01uF 10%	25V	
C254	1-162-970-11	CERAMIC CHIP	0.01uF 10%	25V	
C256	1-162-953-11	CERAMIC CHIP	100PF 5%	50V	
C257	1-162-974-11	CERAMIC CHIP	0.01uF	50V	
C258	1-135-157-21	TANTALUM CHIP	10uF 20%	6.3V	
C259	1-162-945-11	CERAMIC CHIP	22PF 5%	50V	
C260	1-162-954-11	CERAMIC CHIP	120PF 5%	50V	
C261	1-162-944-11	CERAMIC CHIP	18PF 5%	50V	
C262	1-162-962-11	CERAMIC CHIP	470PF 10%	50V	
C263	1-164-633-11	CERAMIC CHIP	0.1uF 10%	25V	
C264	1-162-953-11	CERAMIC CHIP	100PF 5%	50V	
C265	1-162-942-11	CERAMIC CHIP	12PF 5%	50V	
C266	1-135-157-21	TANTALUM CHIP	10uF 20%	6.3V	
C267	1-163-133-00	CERAMIC CHIP	470PF 5%	50V	
C268	1-163-131-00	CERAMIC CHIP	390PF 5%	50V	
C269	1-135-157-21	TANTALUM CHIP	10uF 20%	6.3V	
C270	1-135-157-21	TANTALUM CHIP	10uF 20%	6.3V	
C271	1-162-958-11	CERAMIC CHIP	270PF 5%	50V	
C272	1-162-945-11	CERAMIC CHIP	22PF 5%	50V	
C273	1-162-950-11	CERAMIC CHIP	56PF 5%	50V	
C274	1-162-958-11	CERAMIC CHIP	270PF 5%	50V	
C275	1-135-157-21	TANTALUM CHIP	10uF 20%	6.3V	
C276	1-162-970-11	CERAMIC CHIP	0.01uF 10%	25V	
C277	1-162-974-11	CERAMIC CHIP	0.01uF	50V	
C278	1-135-157-21	TANTALUM CHIP	10uF 20%	6.3V	
C279	1-162-964-11	CERAMIC CHIP	0.001uF 10%	50V	
C280	1-135-157-21	TANTALUM CHIP	10uF 20%	6.3V	
C281	1-135-157-21	TANTALUM CHIP	10uF 20%	6.3V	
C282	1-135-157-21	TANTALUM CHIP	10uF 20%	6.3V	
C283	1-135-157-21	TANTALUM CHIP	10uF 20%	6.3V	
C284	1-162-970-11	CERAMIC CHIP	0.01uF 10%	25V	
C285	1-135-157-21	TANTALUM CHIP	10uF 20%	6.3V	
C287	1-162-951-11	CERAMIC CHIP	68PF 5%	50V	
C288	1-162-974-11	CERAMIC CHIP	0.01uF	50V	
C289	1-135-161-21	TANTALUM CHIP	22uF 10%	6.3V	
C290	1-162-957-11	CERAMIC CHIP	220PF 5%	50V	
C291	1-162-638-11	CERAMIC CHIP	1uF	16V	
C293	1-135-161-21	TANTALUM CHIP	22uF 10%	6.3V	
C294	1-135-145-11	TANTALUM CHIP	0.47uF 10%	25V	
C295	1-162-970-11	CERAMIC CHIP	0.01uF 10%	25V	
C296	1-162-947-11	CERAMIC CHIP	33PF 5%	50V	
C297	1-162-970-11	CERAMIC CHIP	0.01uF 10%	25V	
C298	1-162-974-11	CERAMIC CHIP	0.01uF	50V	
C299	1-162-970-11	CERAMIC CHIP	0.01uF 10%	25V	
C301	1-162-946-11	CERAMIC CHIP	27PF 5%	50V	
C302	1-126-205-11	ELECT CHIP	47uF 20%	6.3V	
C303	1-162-974-11	CERAMIC CHIP	0.01uF	50V	
C304	1-135-157-21	TANTALUM CHIP	10uF 20%	6.3V	
C305	1-162-974-11	CERAMIC CHIP	0.01uF	50V	
C306	1-163-986-00	CERAMIC CHIP	0.027uF 10%	25V	
C307	1-162-952-11	CERAMIC CHIP	82PF 5%	50V	
C308	1-162-966-11	CERAMIC CHIP	0.0022uF 10%	50V	
C309	1-162-947-11	CERAMIC CHIP	33PF 5%	50V	
C310	1-162-949-11	CERAMIC CHIP	47PF 5%	50V	
C312	1-162-949-11	CERAMIC CHIP	47PF 5%	50V	
C313	1-162-962-11	CERAMIC CHIP	470PF 10%	50V	
C314	1-135-161-21	TANTALUM CHIP	22uF 10%	6.3V	
C315	1-162-974-11	CERAMIC CHIP	0.01uF	50V	
C316	1-162-948-11	CERAMIC CHIP	39PF 5%	50V	
C317	1-162-943-11	CERAMIC CHIP	15PF 5%	50V	
C318	1-162-970-11	CERAMIC CHIP	0.01uF 10%	25V	
C319	1-162-949-11	CERAMIC CHIP	47PF 5%	50V	
C320	1-162-956-11	CERAMIC CHIP	180PF 5%	50V	
C321	1-162-999-11	CERAMIC CHIP	91PF 5%	50V	
C322	1-162-949-11	CERAMIC CHIP	47PF 5%	50V	
C323	1-164-156-11	CERAMIC CHIP	0.1uF	25V	
C324	1-162-952-11	CERAMIC CHIP	82PF 5%	50V	
C325	1-162-967-11	CERAMIC CHIP	0.0033uF 10%	50V	
C326	1-162-964-11	CERAMIC CHIP	0.001uF 10%	50V	
C327	1-162-970-11	CERAMIC CHIP	0.01uF 10%	25V	
C329	1-164-156-11	CERAMIC CHIP	0.1uF	25V	
C330	1-162-939-11	CERAMIC CHIP	8PF 0.5PF	50V	
C331	1-162-958-11	CERAMIC CHIP	270PF 5%	50V	
C333	1-162-936-11	CERAMIC CHIP	5PF 0.25PF	50V	
C334	1-164-227-11	CERAMIC CHIP	0.022uF 10%	25V	
C335	1-162-970-11	CERAMIC CHIP	0.01uF 10%	25V	
C336	1-162-970-11	CERAMIC CHIP	0.01uF 10%	25V	
C337	1-162-942-11	CERAMIC CHIP	12PF 5%	50V	
C338	1-164-227-11	CERAMIC CHIP	0.022uF 10%	25V	
C340	1-162-948-11	CERAMIC CHIP	39PF 5%	50V	
C344	1-162-941-11	CERAMIC CHIP	10PF 0.5PF	50V	
C345	1-162-953-11	CERAMIC CHIP	100PF 5%	50V	
C346	1-162-970-11	CERAMIC CHIP	0.01uF 10%	25V	
C347	1-162-974-11	CERAMIC CHIP	0.01uF	50V	
C348	1-135-157-21	TANTALUM CHIP	10uF 20%	6.3V	
C349	1-163-118-00	CERAMIC CHIP	110PF 5%	50V	
C350	1-162-959-11	CERAMIC CHIP	330PF 5%	50V	
C351	1-135-177-21	TANTALUM CHIP	1uF 20%	20V	

When indicating parts by reference number, please include the board name.

Ref.No.	Part No.	Description				Remark
C352	1-162-970-11	CERAMIC CHIP	0.01uF	10%	25V	
C353	1-135-181-21	TANTALUM CHIP	4.7uF	20%	6.3V	
C354	1-162-964-11	CERAMIC CHIP	0.001uF	10%	50V	
C355	1-135-177-21	TANTALUM CHIP	1uF	20%	20V	
C356	1-164-156-11	CERAMIC CHIP	0.1uF		25V	
C358	1-162-638-11	CERAMIC CHIP	1uF		16V	
C359	1-164-156-11	CERAMIC CHIP	0.1uF		25V	
C366	1-162-970-11	CERAMIC CHIP	0.01uF	10%	25V	
C371	1-162-954-11	CERAMIC CHIP	120PF	5%	50V	
C501	1-130-495-00	MYLAR	0.1uF	5%	50V	
C502	1-163-809-11	CERAMIC CHIP	0.047uF	10%	25V	
C503	1-163-809-11	CERAMIC CHIP	0.047uF	10%	25V	
C504	1-164-633-11	CERAMIC CHIP	0.1uF	10%	25V	
C505	1-163-037-11	CERAMIC CHIP	0.022uF	10%	25V	
C506	1-162-970-11	CERAMIC CHIP	0.01uF	10%	25V	
C507	1-162-967-11	CERAMIC CHIP	0.0033uF	10%	50V	
C508	1-162-967-11	CERAMIC CHIP	0.0033uF	10%	50V	
C509	1-162-967-11	CERAMIC CHIP	0.0033uF	10%	50V	
C511	1-162-968-11	CERAMIC CHIP	0.0047uF	10%	50V	
C512	1-163-809-11	CERAMIC CHIP	0.047uF	10%	25V	
C513	1-124-779-00	ELECT CHIP	10uF	20%	16v	
C514	1-135-180-21	TANTALUM CHIP	3.3uF	20%	6.3V	
C515	1-135-149-21	TANTALUM CHIP	2.2uF	20%	10V	
C518	1-164-633-11	CERAMIC CHIP	0.1uF	10%	25V	
C519	1-162-969-11	CERAMIC CHIP	0.0068uF	10%	25V	
C520	1-162-964-11	CERAMIC CHIP	0.001uF	10%	50V	
C521	1-162-638-11	CERAMIC CHIP	1uF		16V	
C522	1-124-779-00	ELECT CHIP	10uF	20%	16v	
C523	1-164-633-11	CERAMIC CHIP	0.1uF	10%	25V	
C524	1-164-633-11	CERAMIC CHIP	0.1uF	10%	25V	
C525	1-164-633-11	CERAMIC CHIP	0.1uF	10%	25V	
C530	1-164-299-11	CERAMIC CHIP	0.22uF	10%	25V	
C531	1-163-038-00	CERAMIC CHIP	0.1uF		25V	
C532	1-164-299-11	CERAMIC CHIP	0.22uF	10%	25V	
C542	1-162-968-11	CERAMIC CHIP	0.0047uF	10%	50V	
C543	1-162-964-11	CERAMIC CHIP	0.001uF	10%	50V	
C544	1-162-968-11	CERAMIC CHIP	0.0047uF	10%	50V	
C546	1-164-633-11	CERAMIC CHIP	0.1uF	10%	25V	
C547	1-135-157-21	TANTALUM CHIP	10uF	20%	6.3V	
C548	1-163-038-00	CERAMIC CHIP	0.1uF		25V	
C549	1-135-157-21	TANTALUM CHIP	10uF	20%	6.3V	
C550	1-162-638-11	CERAMIC CHIP	1uF		16V	
C551	1-162-964-11	CERAMIC CHIP	0.001uF	10%	50V	
C552	1-164-227-11	CERAMIC CHIP	0.022uF	10%	25V	
C553	1-162-964-11	CERAMIC CHIP	0.001uF	10%	50V	
C554	1-164-227-11	CERAMIC CHIP	0.022uF	10%	25V	
C555	1-163-809-11	CERAMIC CHIP	0.047uF	10%	25V	
C556	1-162-638-11	CERAMIC CHIP	1uF		16V	
C557	1-162-638-11	CERAMIC CHIP	1uF		16V	
C558	1-164-232-11	CERAMIC CHIP	0.01uF		50V	

Ref.No.	Part No.	Description				Remark
C559	1-162-921-11	CERAMIC CHIP	33PF	5%	50V	
C560	1-162-921-11	CERAMIC CHIP	33PF	5%	50V	
C561	1-162-638-11	CERAMIC CHIP	1uF		16V	
C562	1-163-133-00	CERAMIC CHIP	470PF	5%	50V	
C563	1-163-141-00	CERAMIC CHIP	0.001uF	5%	50V	
C564	1-162-949-11	CERAMIC CHIP	47PF	5%	50V	
C565	1-163-145-00	CERAMIC CHIP	0.0015uF	5%	50V	
C566	1-162-945-11	CERAMIC CHIP	22PF	5%	50V	
C567	1-163-809-11	CERAMIC CHIP	0.047uF	10%	25V	
C571	1-163-038-00	CERAMIC CHIP	0.1uF		25V	
C572	1-164-232-11	CERAMIC CHIP	0.01uF		50V	
C573	1-164-634-11	CERAMIC CHIP	1uF		16V	
C601	1-162-916-11	CERAMIC CHIP	12PF	5%	50V	
C602	1-162-916-11	CERAMIC CHIP	12PF	5%	50V	
C603	1-162-968-11	CERAMIC CHIP	0.0047uF	10%	50V	
C604	1-135-177-21	TANTALUM CHIP	1uF	20%	20V	
C606	1-162-974-11	CERAMIC CHIP	0.01uF		50V	
C607	1-124-443-00	ELECT	100uF	20%	10V	
C608	1-135-180-21	TANTALUM CHIP	3.3uF	20%	6.3V	
C609	1-162-638-11	CERAMIC CHIP	1uF		16V	
C610	1-162-638-11	CERAMIC CHIP	1uF		16V	
C611	1-162-970-11	CERAMIC CHIP	0.01uF	10%	25V	
C612	1-162-970-11	CERAMIC CHIP	0.01uF	10%	25V	
C613	1-162-970-11	CERAMIC CHIP	0.01uF	10%	25V	
C615	1-162-970-11	CERAMIC CHIP	0.01uF	10%	25V	
C616	1-162-970-11	CERAMIC CHIP	0.01uF	10%	25V	
C618	1-162-974-11	CERAMIC CHIP	0.01uF		50V	
C620	1-162-970-11	CERAMIC CHIP	0.01uF	10%	25V	
C622	1-135-157-21	TANTALUM CHIP	10uF	20%	6.3V	
C623	1-135-157-21	TANTALUM CHIP	10uF	20%	6.3V	
C624	1-162-960-11	CERAMIC CHIP	220PF	10%	50V	
C661	1-162-966-11	CERAMIC CHIP	0.0022uF	10%	50V	
C662	1-163-023-00	CERAMIC CHIP	0.015uF	5%	50V	
C663	1-163-038-00	CERAMIC CHIP	0.1uF		25V	
C664	1-163-133-00	CERAMIC CHIP	470PF	5%	50V	
C665	1-162-974-11	CERAMIC CHIP	0.01uF		50V	
C666	1-162-974-11	CERAMIC CHIP	0.01uF		50V	
C667	1-163-081-00	CERAMIC CHIP	0.22uF		25V	
C668	1-163-035-00	CERAMIC CHIP	0.047uF		50V	
C681	1-135-157-21	TANTALUM CHIP	10uF	20%	6.3V	

< CONNECTOR >

CN101		1-566-531-11	CONNECTOR, FPC (ZIF) 15P
CN201		1-566-542-31	CONNECTOR, FPC (NON ZIF) 10P
CN202		1-568-342-41	CONNECTOR, BOARD TO BOARD 7P
CN203		1-580-496-41	CONNECTOR, BOARD TO BOARD(R)14P
CN204		1-568-364-41	CONNECTOR, BOARD TO BOARD 12P
CN205	*	1-565-876-11	PIN, CONNECTOR (PC BOARD) 4P
CN206	*	1-565-876-11	PIN, CONNECTOR (PC BOARD) 4P
CN501		1-566-541-11	CONNECTOR, FPC (NON ZIF) 9P

When indicating parts by reference number, please include the board name.

Ref. No.	Part No.	Description	Remark
CN601	1-566-538-11	CONNECTOR, FPC (NON ZIF) 6P	
CN602	1-566-546-11	CONNECTOR, FPC (NON ZIF) 14P	
CN603	1-568-367-41	CONNECTOR, BOARD TO BOARD 18P	
CN607	1-565-527-11	PIN, CONNECTOR (PC BOARD) 2P	
		< DIODE >	
D201	8-719-404-46	DIODE MA110	
D211	8-719-118-21	DIODE 1SS283	
D213	8-719-404-35	DIODE MA141WK	
D214	8-719-404-35	DIODE MA141WK	
D215	8-719-800-76	DIODE 1SS226	
D216	8-719-404-46	DIODE MA110	
D217	8-719-404-46	DIODE MA110	
D218	8-719-404-46	DIODE MA110	
D501	8-719-404-46	DIODE MA110	
D601	8-719-404-40	DIODE MA121	
D602	8-719-404-40	DIODE MA121	
D603	8-719-404-40	DIODE MA121	
D604	8-719-404-40	DIODE MA121	
D605	8-719-404-46	DIODE MA110	
D606	8-719-404-46	DIODE MA110	
		< FILTER >	
FL201	1-236-186-11	FILTER, BAND PASS	
FL202	1-409-446-11	FILTER, TRAP	
FL203	1-577-162-11	FILTER, CERAMIC	
		< IC >	
IC101	8-752-033-38	IC CXA1202R	
IC102	8-752-033-38	IC CXA1202R	
IC201	8-752-033-40	IC CXA1201Q	
IC202	8-752-324-87	IC CXL1502M	
IC203	8-752-034-40	IC CXA1200BQ	
IC204	8-759-605-61	IC CXA1203N	
IC205	8-759-009-22	IC MC14094BF	
IC501	8-759-990-55	IC CXA8006M	
IC502	8-759-148-05	IC CXA8010M	
IC504	8-752-038-71	IC CXA1127AM	
IC505	8-752-035-48	IC CXA1204Q	
IC601	8-752-818-58	IC CXP80116-822Q	
IC602	8-759-502-36	IC S-81350HG	
IC603	8-759-987-66	IC TL7757	
IC604	8-759-100-95	IC uPC324G2	
IC607	8-759-100-93	IC uPC393G2	
		< COIL >	
L101	1-412-033-11	INDUCTOR CHIP 220uH	
L102	1-410-385-11	INDUCTOR CHIP 22uH	
L103	1-412-033-11	INDUCTOR CHIP 220uH	
L104	1-410-385-11	INDUCTOR CHIP 22uH	
L161	1-412-029-11	INDUCTOR CHIP 10uH	
L162	1-412-029-11	INDUCTOR CHIP 10uH	
L191	1-412-033-11	INDUCTOR CHIP 220uH	
L192	1-410-381-11	INDUCTOR CHIP 10uH	
L201	1-410-393-11	INDUCTOR CHIP 100uH	
L202	1-410-393-11	INDUCTOR CHIP 100uH	
L203	1-412-031-11	INDUCTOR CHIP 47uH	
L204	1-412-031-11	INDUCTOR CHIP 47uH	
L205	1-410-388-21	INDUCTOR CHIP 39uH	
L207	1-410-393-11	INDUCTOR CHIP 100uH	
L208	1-410-387-11	INDUCTOR CHIP 33uH	
L209	1-410-390-11	INDUCTOR CHIP 56uH	
L210	1-412-029-11	INDUCTOR CHIP 10uH	
L211	1-410-389-31	INDUCTOR CHIP 47uH	
L212	1-410-393-11	INDUCTOR CHIP 100uH	
L213	1-410-377-31	INDUCTOR CHIP 4.7uH	
L214	1-408-797-11	INDUCTOR CHIP 470uH	
L215	1-408-795-21	INDUCTOR CHIP 330uH	
L216	1-410-388-21	INDUCTOR CHIP 39uH	
L217	1-408-795-21	INDUCTOR CHIP 330uH	
L218	1-410-393-11	INDUCTOR CHIP 100uH	
L219	1-410-380-31	INDUCTOR CHIP 8.2uH	
L220	1-408-795-21	INDUCTOR CHIP 330uH	
L221	1-410-655-31	INDUCTOR CHIP 120uH	
L222	1-412-138-31	INDUCTOR 100uH	
L223	1-410-656-11	INDUCTOR CHIP 150uH	
L224	1-410-657-21	INDUCTOR CHIP 180uH	
L225	1-410-387-11	INDUCTOR CHIP 33uH	
L226	1-410-657-21	INDUCTOR CHIP 180uH	
L227	1-410-381-11	INDUCTOR CHIP 10uH	
L228	1-412-029-11	INDUCTOR CHIP 10uH	
L229	1-410-393-11	INDUCTOR CHIP 100uH	
L230	1-410-393-11	INDUCTOR CHIP 100uH	
L231	1-410-658-31	INDUCTOR CHIP 220uH	
L502	1-408-795-21	INDUCTOR CHIP 330uH	
L503	1-412-032-11	INDUCTOR CHIP 100uH	
L504	1-412-032-11	INDUCTOR CHIP 100uH	
L601	1-412-031-11	INDUCTOR CHIP 47uH	
L602	1-412-031-11	INDUCTOR CHIP 47uH	
		< IC LINK >	
PS601 ⚠	1-532-605-00	LINK, IC	0.4A
PS602 ⚠	1-532-685-00	LINK, IC	
		< TRANSISTOR >	
Q161	8-729-905-12	TRANSISTOR DTA144EU	
Q162	8-729-117-32	TRANSISTOR 2SC4177	
Q164	8-729-905-18	TRANSISTOR DTC144EU	
Q165	8-729-905-18	TRANSISTOR DTC144EU	
Q166	8-729-905-18	TRANSISTOR DTC144EU	

The components identified by mark ⚠ or dotted line with mark ⚠ are critical for safety.
Replace only with part number specified.

When indicating parts by reference number, please include the board name.

Ref. No.	Part No.	Description	Remark
Q191	8-729-117-16	TRANSISTOR 2SA1611	
Q193	8-729-216-22	TRANSISTOR 2SA1162	
Q201	8-729-101-07	TRANSISTOR 2SB798-DL	
Q202	8-729-602-36	TRANSISTOR 2SA1602	
Q203	8-729-602-36	TRANSISTOR 2SA1602	
Q204	8-729-905-18	TRANSISTOR DTC144EU	
Q205	8-729-602-36	TRANSISTOR 2SA1602	
Q206	8-729-907-00	TRANSISTOR DTC114EU	
Q207	8-729-140-88	TRANSISTOR FP1A3M	
Q208	8-729-102-07	TRANSISTOR 2SC2223-F13	
Q209	8-729-905-18	TRANSISTOR DTC144EU	
Q211	8-729-905-61	TRANSISTOR DTC124EU	
Q212	8-729-602-36	TRANSISTOR 2SA1602	
Q213	8-729-117-32	TRANSISTOR 2SC4177	
Q214	8-729-117-32	TRANSISTOR 2SC4177	
Q215	8-729-602-36	TRANSISTOR 2SA1602	
Q216	8-729-117-32	TRANSISTOR 2SC4177	
Q217	8-729-102-07	TRANSISTOR 2SC2223-F13	
Q218	8-729-117-32	TRANSISTOR 2SC4177	
Q219	8-729-602-36	TRANSISTOR 2SA1602	
Q220	8-729-117-32	TRANSISTOR 2SC4177	
Q221	8-729-905-12	TRANSISTOR DTA144EU	
Q222	8-729-117-32	TRANSISTOR 2SC4177	
Q224	8-729-905-12	TRANSISTOR DTA144EU	
Q225	8-729-117-32	TRANSISTOR 2SC4177	
Q226	8-729-807-87	TRANSISTOR 2SB1295-UL6	
Q227	8-729-602-36	TRANSISTOR 2SA1602	
Q228	8-729-117-32	TRANSISTOR 2SC4177	
Q229	8-729-905-15	TRANSISTOR DTC144WU	
Q230	8-729-117-32	TRANSISTOR 2SC4177	
Q231	8-729-905-15	TRANSISTOR DTC144WU	
Q232	8-729-140-88	TRANSISTOR FP1A3M	
Q233	8-729-117-32	TRANSISTOR 2SC4177	
Q234	8-729-117-32	TRANSISTOR 2SC4177	
Q235	8-729-602-36	TRANSISTOR 2SA1602	
Q236	8-729-117-16	TRANSISTOR 2SA1611	
Q237	8-729-117-16	TRANSISTOR 2SA1611	
Q238	8-729-102-07	TRANSISTOR 2SC2223-F13	
Q239	8-729-117-32	TRANSISTOR 2SC4177	
Q241	8-729-602-36	TRANSISTOR 2SA1602	
Q242	8-729-905-18	TRANSISTOR DTC144EU	
Q243	8-729-905-12	TRANSISTOR DTA144EU	
Q244	8-729-420-12	TRANSISTOR XN4213	
Q245	8-729-102-07	TRANSISTOR 2SC2223-F13	
Q246	8-729-117-32	TRANSISTOR 2SC4177	
Q247	8-729-117-32	TRANSISTOR 2SC4177	
Q248	8-729-905-12	TRANSISTOR DTA144EU	
Q249	8-729-420-12	TRANSISTOR XN4213	
Q250	8-729-905-12	TRANSISTOR DTA144EU	
Q251	8-729-905-18	TRANSISTOR DTC144EU	
Q252	8-729-117-32	TRANSISTOR 2SC4177	
Q253	8-729-117-32	TRANSISTOR 2SC4177	
Q254	8-729-905-12	TRANSISTOR DTA144EU	
Q256	8-729-905-18	TRANSISTOR DTC144EU	
Q258	8-729-921-08	TRANSISTOR DTC144TU	
Q259	8-729-921-58	TRANSISTOR DTA144TU	
Q260	8-729-117-32	TRANSISTOR 2SC4177	
Q261	8-729-602-36	TRANSISTOR 2SA1602	
Q270	8-729-602-36	TRANSISTOR 2SA1602	
Q272	8-729-602-36	TRANSISTOR 2SA1602	
Q501	8-729-920-39	TRANSISTOR IMT1US	
Q541	8-729-602-36	TRANSISTOR 2SA1602	
Q542	8-729-117-32	TRANSISTOR 2SC4177	
Q543	8-729-602-36	TRANSISTOR 2SA1602	
Q571	8-729-920-39	TRANSISTOR IMT1US	
Q572	8-729-920-39	TRANSISTOR IMT1US	
Q573	8-729-117-32	TRANSISTOR 2SC4177	
Q601	8-729-403-24	TRANSISTOR XN4210	
Q602	8-729-403-24	TRANSISTOR XN4210	
Q603	8-729-403-24	TRANSISTOR XN4210	
Q604	8-729-403-24	TRANSISTOR XN4210	
Q606	8-729-403-24	TRANSISTOR XN4210	
Q607	8-729-403-24	TRANSISTOR XN4210	
Q608	8-729-403-24	TRANSISTOR XN4210	
Q609	8-729-403-24	TRANSISTOR XN4210	
Q610	8-729-403-24	TRANSISTOR XN4210	
Q611	8-729-420-12	TRANSISTOR XN4213	
Q612	8-729-905-12	TRANSISTOR DTA144EU	
Q613	8-729-905-18	TRANSISTOR DTC144EU	
Q614	8-729-903-97	TRANSISTOR FMS1FE	
Q615	8-729-903-82	TRANSISTOR FMW2	
Q616	8-729-117-32	TRANSISTOR 2SC4177	
Q617	8-729-903-10	TRANSISTOR FMW1	
Q618	8-729-903-10	TRANSISTOR FMW1	
Q619	8-729-907-00	TRANSISTOR DTC114EU	
Q620	8-729-421-90	TRANSISTOR XN4113	
Q621	8-729-420-12	TRANSISTOR XN4213	
Q623	8-729-117-32	TRANSISTOR 2SC4177	
Q643	8-729-403-24	TRANSISTOR XN4210	
Q644	8-729-905-12	TRANSISTOR DTA144EU	
Q645	8-729-905-18	TRANSISTOR DTC144EU	
Q661	8-729-117-32	TRANSISTOR 2SC4177	
Q662	8-729-602-36	TRANSISTOR 2SA1602	
Q663	8-729-117-32	TRANSISTOR 2SC4177	
Q664	8-729-602-36	TRANSISTOR 2SA1602	
Q665	8-729-117-32	TRANSISTOR 2SC4177	
Q681	8-729-117-32	TRANSISTOR 2SC4177	
Q682	8-729-820-46	TRANSISTOR 2SB1202FAST	
		< RESISTOR >	

When indicating parts by reference number, please include the board name.

VS-69

Ref. No.	Part No.	Description				Remark
R101	1-216-838-11	METAL CHIP	27K	5%	1/16W	
R105	1-216-864-11	METAL CHIP	0			
R106	1-216-837-11	METAL CHIP	22K	5%	1/16W	
R108	1-216-840-11	METAL CHIP	39K	5%	1/16W	
R110	1-216-837-11	METAL CHIP	22K	5%	1/16W	
R111	1-216-838-11	METAL CHIP	27K	5%	1/16W	
R116	1-216-837-11	METAL CHIP	22K	5%	1/16W	
R118	1-216-840-11	METAL CHIP	39K	5%	1/16W	
R120	1-216-837-11	METAL CHIP	22K	5%	1/16W	
R121	1-216-837-11	METAL CHIP	22K	5%	1/16W	
R122	1-216-821-11	METAL CHIP	1K	5%	1/16W	
R126	1-216-821-11	METAL CHIP	1K	5%	1/16W	
R127	1-216-837-11	METAL CHIP	22K	5%	1/16W	
R128	1-216-864-11	METAL CHIP	0			
R129	1-216-826-11	METAL CHIP	2.7K	5%	1/16W	
R143	1-216-821-11	METAL CHIP	1K	5%	1/16W	
R144	1-216-826-11	METAL CHIP	2.7K	5%	1/16W	
R162	1-216-832-11	METAL CHIP	8.2K	5%	1/16W	
R163	1-216-821-11	METAL CHIP	1K	5%	1/16W	
R164	1-216-841-11	METAL CHIP	47K	5%	1/16W	
R165	1-216-837-11	METAL CHIP	22K	5%	1/16W	
R166	1-216-832-11	METAL CHIP	8.2K	5%	1/16W	
R167	1-216-843-11	METAL CHIP	68K	5%	1/16W	
R168	1-216-828-11	METAL CHIP	3.9K	5%	1/16W	
R170	1-216-847-11	METAL CHIP	150K	5%	1/16W	
R171	1-216-847-11	METAL CHIP	150K	5%	1/16W	
R172	1-216-847-11	METAL CHIP	150K	5%	1/16W	
R173	1-216-828-11	METAL CHIP	3.9K	5%	1/16W	
R174	1-216-821-11	METAL CHIP	1K	5%	1/16W	
R175	1-216-833-11	METAL CHIP	10K	5%	1/16W	
R176	1-216-791-11	METAL CHIP	3.3	5%	1/16W	
R177	1-216-791-11	METAL CHIP	3.3	5%	1/16W	
R178	1-216-845-11	METAL CHIP	100K	5%	1/16W	
R179	1-216-845-11	METAL CHIP	100K	5%	1/16W	
R191	1-216-837-11	METAL CHIP	22K	5%	1/16W	
R192	1-216-839-11	METAL CHIP	33K	5%	1/16W	
R193	1-216-815-11	METAL CHIP	330	5%	1/16W	
R194	1-216-817-11	METAL CHIP	470	5%	1/16W	
R197	1-216-801-11	METAL CHIP	22	5%	1/16W	
R198	1-216-818-11	METAL CHIP	560	5%	1/16W	
R201	1-216-804-11	METAL CHIP	39	5%	1/16W	
R202	1-216-804-11	METAL CHIP	39	5%	1/16W	
R203	1-216-821-11	METAL CHIP	1K	5%	1/16W	
R204	1-216-821-11	METAL CHIP	1K	5%	1/16W	
R205	1-216-791-11	METAL CHIP	3.3	5%	1/16W	
R206	1-216-829-11	METAL CHIP	4.7K	5%	1/16W	
R207	1-216-822-11	METAL CHIP	1.2K	5%	1/16W	
R208	1-216-831-11	METAL CHIP	6.8K	5%	1/16W	
R209	1-216-825-11	METAL CHIP	2.2K	5%	1/16W	
R210	1-216-821-11	METAL CHIP	1K	5%	1/16W	
R211	1-216-022-00	METAL CHIP	75	5%	1/10W	
R214	1-216-828-11	METAL CHIP	3.9K	5%	1/16W	
R215	1-216-821-11	METAL CHIP	1K	5%	1/16W	
R216	1-216-821-11	METAL CHIP	1K	5%	1/16W	
R217	1-216-699-11	METAL CHIP	100K	0.5%	1/10W	
R218	1-216-840-11	METAL CHIP	39K	5%	1/16W	
R219	1-216-821-11	METAL CHIP	1K	5%	1/16W	
R220	1-216-827-11	METAL CHIP	3.3K	5%	1/16W	
R221	1-216-840-11	METAL CHIP	39K	5%	1/16W	
R222	1-216-814-11	METAL CHIP	270	5%	1/16W	
R223	1-216-835-11	METAL CHIP	15K	5%	1/16W	
R224	1-216-821-11	METAL CHIP	1K	5%	1/16W	
R225	1-216-837-11	METAL CHIP	22K	5%	1/16W	
R226	1-216-815-11	METAL CHIP	330	5%	1/16W	
R227	1-216-857-11	METAL CHIP	1M	5%	1/16W	
R228	1-216-857-11	METAL CHIP	1M	5%	1/16W	
R229	1-216-810-11	METAL CHIP	120	5%	1/16W	
R230	1-216-857-11	METAL CHIP	1M	5%	1/16W	
R231	1-216-857-11	METAL CHIP	1M	5%	1/16W	
R232	1-216-822-11	METAL CHIP	1.2K	5%	1/16W	
R233	1-216-833-11	METAL CHIP	10K	5%	1/16W	
R234	1-216-811-11	METAL CHIP	150	5%	1/16W	
R235	1-216-841-11	METAL CHIP	47K	5%	1/16W	
R236	1-216-831-11	METAL CHIP	6.8K	5%	1/16W	
R237	1-216-821-11	METAL CHIP	1K	5%	1/16W	
R238	1-216-817-11	METAL CHIP	470	5%	1/16W	
R239	1-216-821-11	METAL CHIP	1K	5%	1/16W	
R240	1-216-820-11	METAL GLAZE	820	5%	1/16W	
R243	1-216-820-11	METAL GLAZE	820	5%	1/16W	
R244	1-216-833-11	METAL CHIP	10K	5%	1/16W	
R245	1-216-829-11	METAL CHIP	4.7K	5%	1/16W	
R246	1-216-833-11	METAL CHIP	10K	5%	1/16W	
R247	1-216-807-11	METAL CHIP	68	5%	1/16W	
R249	1-216-833-11	METAL CHIP	10K	5%	1/16W	
R250	1-216-831-11	METAL CHIP	6.8K	5%	1/16W	
R251	1-216-831-11	METAL CHIP	6.8K	5%	1/16W	
R252	1-216-830-11	METAL CHIP	5.6K	5%	1/16W	
R253	1-216-819-11	METAL CHIP	680	5%	1/16W	
R254	1-216-828-11	METAL CHIP	3.9K	5%	1/16W	
R255	1-216-820-11	METAL GLAZE	820	5%	1/16W	
R256	1-216-833-11	METAL CHIP	10K	5%	1/16W	
R257	1-216-853-11	METAL CHIP	470K	5%	1/16W	
R258	1-216-864-11	METAL CHIP	0			
R259	1-216-820-11	METAL GLAZE	820	5%	1/16W	
R260	1-216-864-11	METAL CHIP	0			
R261	1-216-821-11	METAL CHIP	1K	5%	1/16W	
R262	1-216-825-11	METAL CHIP	2.2K	5%	1/16W	
R263	1-216-825-11	METAL CHIP	2.2K	5%	1/16W	
R264	1-216-813-11	METAL CHIP	220	5%	1/16W	
R265	1-216-857-11	METAL CHIP	1M	5%	1/16W	

When indicating parts by reference number, please include the board name.

Ref. No.	Part No.	Description				Remark
R266	1-216-825-11	METAL CHIP	2.2K	5%	1/16W	
R267	1-216-826-11	METAL CHIP	2.7K	5%	1/16W	
R268	1-216-832-11	METAL CHIP	8.2K	5%	1/16W	
R269	1-216-651-11	METAL CHIP	1K	0.5%	1/10W	
R270	1-216-643-11	METAL CHIP	470	0.5%	1/10W	
R271	1-216-818-11	METAL CHIP	560	5%	1/16W	
R272	1-216-821-11	METAL CHIP	1K	5%	1/16W	
R273	1-216-829-11	METAL CHIP	4.7K	5%	1/16W	
R274	1-216-825-11	METAL CHIP	2.2K	5%	1/16W	
R275	1-216-821-11	METAL CHIP	1K	5%	1/16W	
R276	1-216-833-11	METAL CHIP	10K	5%	1/16W	
R277	1-216-810-11	METAL CHIP	120	5%	1/16W	
R278	1-216-829-11	METAL CHIP	4.7K	5%	1/16W	
R279	1-216-821-11	METAL CHIP	1K	5%	1/16W	
R280	1-216-819-11	METAL CHIP	680	5%	1/16W	
R281	1-216-823-11	METAL CHIP	1.5K	5%	1/16W	
R282	1-216-826-11	METAL CHIP	2.7K	5%	1/16W	
R283	1-216-821-11	METAL CHIP	1K	5%	1/16W	
R284	1-216-822-11	METAL CHIP	1.2K	5%	1/16W	
R285	1-216-829-11	METAL CHIP	4.7K	5%	1/16W	
R286	1-216-663-11	METAL CHIP	3.3K	0.5%	1/10W	
R287	1-216-821-11	METAL CHIP	1K	5%	1/16W	
R288	1-216-833-11	METAL CHIP	10K	5%	1/16W	
R289	1-216-833-11	METAL CHIP	10K	5%	1/16W	
R290	1-216-843-11	METAL CHIP	68K	5%	1/16W	
R291	1-216-855-11	METAL CHIP	680K	5%	1/16W	
R293	1-216-822-11	METAL CHIP	1.2K	5%	1/16W	
R294	1-216-829-11	METAL CHIP	4.7K	5%	1/16W	
R295	1-216-820-11	METAL GLAZE	820	5%	1/16W	
R296	1-216-821-11	METAL CHIP	1K	5%	1/16W	
R297	1-216-825-11	METAL CHIP	2.2K	5%	1/16W	
R298	1-216-823-11	METAL CHIP	1.5K	5%	1/16W	
R300	1-216-821-11	METAL CHIP	1K	5%	1/16W	
R301	1-216-825-11	METAL CHIP	2.2K	5%	1/16W	
R302	1-216-833-11	METAL CHIP	10K	5%	1/16W	
R303	1-216-825-11	METAL CHIP	2.2K	5%	1/16W	
R304	1-216-829-11	METAL CHIP	4.7K	5%	1/16W	
R305	1-216-833-11	METAL CHIP	10K	5%	1/16W	
R306	1-216-813-11	METAL CHIP	220	5%	1/16W	
R311	1-216-827-11	METAL CHIP	3.3K	5%	1/16W	
R315	1-216-821-11	METAL CHIP	1K	5%	1/16W	
R316	1-216-837-11	METAL CHIP	22K	5%	1/16W	
R317	1-216-825-11	METAL CHIP	2.2K	5%	1/16W	
R318	1-216-839-11	METAL CHIP	33K	5%	1/16W	
R319	1-216-818-11	METAL CHIP	560	5%	1/16W	
R320	1-216-820-11	METAL GLAZE	820	5%	1/16W	
R321	1-216-825-11	METAL CHIP	2.2K	5%	1/16W	
R322	1-216-833-11	METAL CHIP	10K	5%	1/16W	
R325	1-216-819-11	METAL CHIP	680	5%	1/16W	
R326	1-216-813-11	METAL CHIP	220	5%	1/16W	
R327	1-216-819-11	METAL CHIP	680	5%	1/16W	
R328	1-216-823-11	METAL CHIP	1.5K	5%	1/16W	
R329	1-216-833-11	METAL CHIP	10K	5%	1/16W	
R330	1-216-829-11	METAL CHIP	4.7K	5%	1/16W	
R331	1-216-825-11	METAL CHIP	2.2K	5%	1/16W	
R332	1-216-818-11	METAL CHIP	560	5%	1/16W	
R333	1-216-809-11	METAL CHIP	100	5%	1/16W	
R334	1-216-821-11	METAL CHIP	1K	5%	1/16W	
R335	1-216-826-11	METAL CHIP	2.7K	5%	1/16W	
R336	1-216-825-11	METAL CHIP	2.2K	5%	1/16W	
R337	1-216-818-11	METAL CHIP	560	5%	1/16W	
R338	1-216-833-11	METAL CHIP	10K	5%	1/16W	
R339	1-216-833-11	METAL CHIP	10K	5%	1/16W	
R341	1-216-830-11	METAL CHIP	5.6K	5%	1/16W	
R342	1-216-825-11	METAL CHIP	2.2K	5%	1/16W	
R343	1-216-825-11	METAL CHIP	2.2K	5%	1/16W	
R344	1-216-818-11	METAL CHIP	560	5%	1/16W	
R345	1-216-829-11	METAL CHIP	4.7K	5%	1/16W	
R346	1-216-833-11	METAL CHIP	10K	5%	1/16W	
R347	1-216-825-11	METAL CHIP	2.2K	5%	1/16W	
R348	1-216-821-11	METAL CHIP	1K	5%	1/16W	
R349	1-216-823-11	METAL CHIP	1.5K	5%	1/16W	
R352	1-216-820-11	METAL GLAZE	820	5%	1/16W	
R354	1-216-831-11	METAL CHIP	6.8K	5%	1/16W	
R355	1-216-817-11	METAL CHIP	470	5%	1/16W	
R356	1-216-808-11	METAL CHIP	82	5%	1/16W	
R357	1-216-823-11	METAL CHIP	1.5K	5%	1/16W	
R358	1-216-824-11	METAL CHIP	1.8K	5%	1/16W	
R359	1-216-830-11	METAL CHIP	5.6K	5%	1/16W	
R360	1-216-821-11	METAL CHIP	1K	5%	1/16W	
R361	1-216-836-11	METAL CHIP	18K	5%	1/16W	
R362	1-216-836-11	METAL CHIP	18K	5%	1/16W	
R363	1-216-821-11	METAL CHIP	1K	5%	1/16W	
R364	1-216-805-11	METAL CHIP	47	5%	1/16W	
R365	1-216-823-11	METAL CHIP	1.5K	5%	1/16W	
R369	1-216-845-11	METAL CHIP	100K	5%	1/16W	
R377	1-216-825-11	METAL CHIP	2.2K	5%	1/16W	
R378	1-216-833-11	METAL CHIP	10K	5%	1/16W	
R379	1-216-827-11	METAL CHIP	3.3K	5%	1/16W	
R380	1-216-699-11	METAL CHIP	100K	0.5%	1/10W	
R381	1-216-845-11	METAL CHIP	100K	5%	1/16W	
R382	1-216-832-11	METAL CHIP	8.2K	5%	1/16W	
R390	1-216-833-11	METAL CHIP	10K	5%	1/16W	
R391	1-216-827-11	METAL CHIP	3.3K	5%	1/16W	
R393	1-216-829-11	METAL CHIP	4.7K	5%	1/16W	
R394	1-216-821-11	METAL CHIP	1K	5%	1/16W	
R396	1-216-829-11	METAL CHIP	4.7K	5%	1/16W	
R501	1-216-336-11	METAL CHIP	47K	1%	1/10W	
R502	1-216-336-11	METAL CHIP	47K	1%	1/10W	
R503	1-216-101-00	METAL CHIP	150K	5%	1/10W	

When indicating parts by reference number, please include the board name.

Ref. No.	Part No.	Description				Remark
R504	1-216-699-11	METAL CHIP	100K	0.5%	1/10W	
R505	1-216-661-11	METAL CHIP	2.7K	0.5%	1/10W	
R506	1-216-821-11	METAL CHIP	1K	5%	1/16W	
R507	1-216-841-11	METAL CHIP	47K	5%	1/16W	
R508	1-216-833-11	METAL CHIP	10K	5%	1/16W	
R509	1-216-840-11	METAL CHIP	39K	5%	1/16W	
R510	1-216-843-11	METAL CHIP	68K	5%	1/16W	
R511	1-216-815-11	METAL CHIP	330	5%	1/16W	
R512	1-217-671-11	METAL CHIP	1	5%	1/10W	
R513	1-217-671-11	METAL CHIP	1	5%	1/10W	
R514	1-217-671-11	METAL CHIP	1	5%	1/10W	
R515	1-217-671-11	METAL CHIP	1	5%	1/10W	
R521	1-216-841-11	METAL CHIP	47K	5%	1/16W	
R522	1-216-841-11	METAL CHIP	47K	5%	1/16W	
R526	1-216-833-11	METAL CHIP	10K	5%	1/16W	
R527	1-216-835-11	METAL CHIP	15K	5%	1/16W	
R528	1-216-789-11	METAL CHIP	2.2	5%	1/16W	
R529	1-216-789-11	METAL CHIP	2.2	5%	1/16W	
R530	1-216-789-11	METAL CHIP	2.2	5%	1/16W	
R531	1-216-822-11	METAL CHIP	1.2K	5%	1/16W	
R532	1-216-844-11	METAL CHIP	82K	5%	1/16W	
R533	1-216-836-11	METAL CHIP	18K	5%	1/16W	
R536	1-216-857-11	METAL CHIP	1M	5%	1/16W	
R543	1-216-821-11	METAL CHIP	1K	5%	1/16W	
R544	1-216-814-11	METAL CHIP	270	5%	1/16W	
R545	1-216-812-11	METAL CHIP	180	5%	1/16W	
R548	1-216-832-11	METAL CHIP	8.2K	5%	1/16W	
R549	1-216-833-11	METAL CHIP	10K	5%	1/16W	
R550	1-216-836-11	METAL CHIP	18K	5%	1/16W	
R551	1-216-837-11	METAL CHIP	22K	5%	1/16W	
R552	1-216-837-11	METAL CHIP	22K	5%	1/16W	
R553	1-216-820-11	METAL GLAZE	820	5%	1/16W	
R554	1-216-857-11	METAL CHIP	1M	5%	1/16W	
R555	1-216-837-11	METAL CHIP	22K	5%	1/16W	
R556	1-216-831-11	METAL CHIP	6.8K	5%	1/16W	
R557	1-216-832-11	METAL CHIP	8.2K	5%	1/16W	
R558	1-216-829-11	METAL CHIP	4.7K	5%	1/16W	
R559	1-216-829-11	METAL CHIP	4.7K	5%	1/16W	
R560	1-216-840-11	METAL CHIP	39K	5%	1/16W	
R571	1-216-840-11	METAL CHIP	39K	5%	1/16W	
R572	1-216-829-11	METAL CHIP	4.7K	5%	1/16W	
R573	1-216-833-11	METAL CHIP	10K	5%	1/16W	
R574	1-216-845-11	METAL CHIP	100K	5%	1/16W	
R575	1-216-840-11	METAL CHIP	39K	5%	1/16W	
R576	1-216-837-11	METAL CHIP	22K	5%	1/16W	
R577	1-216-819-11	METAL CHIP	680	5%	1/16W	
R580	1-216-857-11	METAL CHIP	1M	5%	1/16W	
R590	1-216-838-11	METAL CHIP	27K	5%	1/16W	
R591	1-216-838-11	METAL CHIP	27K	5%	1/16W	
R592	1-216-838-11	METAL CHIP	27K	5%	1/16W	
R593	1-216-833-11	METAL CHIP	10K	5%	1/16W	
R594	1-216-827-11	METAL CHIP	3.3K	5%	1/16W	
R595	1-216-829-11	METAL CHIP	4.7K	5%	1/16W	
R596	1-216-837-11	METAL CHIP	22K	5%	1/16W	
R597	1-216-847-11	METAL CHIP	150K	5%	1/16W	
R599	1-216-825-11	METAL CHIP	2.2K	5%	1/16W	
R602	1-216-833-11	METAL CHIP	10K	5%	1/16W	
R604	1-216-827-11	METAL CHIP	3.3K	5%	1/16W	
R605	1-216-833-11	METAL CHIP	10K	5%	1/16W	
R610	1-216-845-11	METAL CHIP	100K	5%	1/16W	
R611	1-216-837-11	METAL CHIP	22K	5%	1/16W	
R612	1-216-852-11	METAL CHIP	390K	5%	1/16W	
R613	1-216-835-11	METAL CHIP	15K	5%	1/16W	
R614	1-216-839-11	METAL CHIP	33K	5%	1/16W	
R615	1-216-838-11	METAL CHIP	27K	5%	1/16W	
R616	1-216-857-11	METAL CHIP	1M	5%	1/16W	
R617	1-216-857-11	METAL CHIP	1M	5%	1/16W	
R618	1-216-839-11	METAL CHIP	33K	5%	1/16W	
R619	1-216-844-11	METAL CHIP	82K	5%	1/16W	
R620	1-216-844-11	METAL CHIP	82K	5%	1/16W	
R621	1-216-844-11	METAL CHIP	82K	5%	1/16W	
R622	1-216-844-11	METAL CHIP	82K	5%	1/16W	
R625	1-216-821-11	METAL CHIP	1K	5%	1/16W	
R626	1-216-833-11	METAL CHIP	10K	5%	1/16W	
R627	1-216-817-11	METAL CHIP	470	5%	1/16W	
R634	1-216-174-00	METAL GLAZE	100	5%	1/8W	
R635	1-216-845-11	METAL CHIP	100K	5%	1/16W	
R645	1-216-845-11	METAL CHIP	100K	5%	1/16W	
R646	1-216-845-11	METAL CHIP	100K	5%	1/16W	
R647	1-216-833-11	METAL CHIP	10K	5%	1/16W	
R648	1-216-833-11	METAL CHIP	10K	5%	1/16W	
R661	1-216-839-11	METAL CHIP	33K	5%	1/16W	
R662	1-216-833-11	METAL CHIP	10K	5%	1/16W	
R663	1-216-821-11	METAL CHIP	1K	5%	1/16W	
R664	1-216-809-11	METAL CHIP	100	5%	1/16W	
R665	1-216-810-11	METAL CHIP	120	5%	1/16W	
R666	1-216-831-11	METAL CHIP	6.8K	5%	1/16W	
R667	1-216-843-11	METAL CHIP	68K	5%	1/16W	
R668	1-216-857-11	METAL CHIP	1M	5%	1/16W	
R669	1-216-838-11	METAL CHIP	27K	5%	1/16W	
R670	1-216-824-11	METAL CHIP	1.8K	5%	1/16W	
R671	1-216-838-11	METAL CHIP	27K	5%	1/16W	
R672	1-216-854-11	METAL CHIP	560K	5%	1/16W	
R673	1-216-857-11	METAL CHIP	1M	5%	1/16W	
R674	1-216-851-11	METAL CHIP	330K	5%	1/16W	
R675	1-216-857-11	METAL CHIP	1M	5%	1/16W	
R676	1-216-861-11	METAL CHIP	2.2M	5%	1/16W	
R678	1-216-847-11	METAL CHIP	150K	5%	1/16W	
R679	1-216-833-11	METAL CHIP	10K	5%	1/16W	
R681	1-216-833-11	METAL CHIP	10K	5%	1/16W	

When indicating parts by reference number, please include the board name.

Ref. No.	Part No.	Description			Remark
R682	1-216-820-11	METAL GLAZE	820	5% 1/16W	
R683	1-216-194-00	METAL CHIP	680	5% 1/8W	
R684	1-216-194-00	METAL CHIP	680	5% 1/8W	
R685	1-216-194-00	METAL CHIP	680	5% 1/8W	
R686	1-216-821-11	METAL CHIP	1K	5% 1/16W	
		< NETWORK RESISTOR >			
RB201	1-236-424-11	NETWORK, RES 10K			
RB204	1-236-408-11	NETWORK, RES 470			
RB206	1-236-409-11	NETWORK, RES 560			
RB207	1-236-436-11	NETWORK, RES 100K			
RB208	1-236-412-11	NETWORK, RES 1.0K			
RB209	1-236-416-11	NETWORK, RES 2.2K			
RB502	1-236-424-11	NETWORK, RES 10K			
RB541	1-236-408-11	NETWORK, RES 470			
RB542	1-236-418-11	NETWORK, RES 3.3K			
RB543	1-236-418-11	NETWORK, RES 3.3K			
RB601	1-236-436-11	NETWORK, RES 100K			
RB602	1-236-436-11	NETWORK, RES 100K			
RB603	1-236-436-11	NETWORK, RES 100K			
RB604	1-236-436-11	NETWORK, RES 100K			
RB605	1-236-436-11	NETWORK, RES 100K			
RB606	1-236-436-11	NETWORK, RES 100K			
RB607	1-236-436-11	NETWORK, RES 100K			
RB608	1-236-436-11	NETWORK, RES 100K			
RB609	1-236-436-11	NETWORK, RES 100K			
RB610	1-236-424-11	NETWORK, RES 10K			
RB611	1-236-424-11	NETWORK, RES 10K			
RB612	1-236-424-11	NETWORK, RES 10K			
RB614	1-236-424-11	NETWORK, RES 10K			
RB615	1-236-436-11	NETWORK, RES 100K			
RB616	1-236-432-11	NETWORK, RES 47K			
RB617	1-236-444-11	NETWORK, RES 470K			
RB618	1-236-436-11	NETWORK, RES 100K			
RB619	1-236-424-11	NETWORK, RES 10K			
RB661	1-236-424-11	NETWORK, RES 10K			
RB662	1-236-442-11	NETWORK, RES 330K			
RB681	1-236-424-11	NETWORK, RES 10K			
RB682	1-236-424-11	NETWORK, RES 10K			
		< VARIABLE RESISTOR >			
RV112	1-238-092-11	RES, ADJ CERMET 47K			
RV113	1-238-092-11	RES, ADJ CERMET 47K			
RV201	1-238-092-11	RES, ADJ CERMET 47K			
RV202	1-238-087-11	RES, ADJ CERMET 1K			
RV203	1-238-088-11	RES, ADJ CERMET 2.2K			
RV204	1-238-089-11	RES, ADJ CERMET 4.7K			
RV205	1-238-088-11	RES, ADJ CERMET 2.2K			
RV206	1-238-092-11	RES, ADJ CERMET 47K			
RV207	1-238-090-11	RES, ADJ CERMET 10K			

Ref. No.	Part No.	Description	Remark
RV208	1-238-086-11	RES, ADJ CERMET 470	
RV209	1-238-087-11	RES, ADJ CERMET 1K	
RV210	1-238-088-11	RES, ADJ CERMET 2.2K	
RV212	1-238-089-11	RES, ADJ CERMET 4.7K	
RV213	1-238-090-11	RES, ADJ CERMET 10K	
RV502	1-238-095-11	RES, ADJ CERMET 470K	
RV602	1-238-092-11	RES, ADJ CERMET 47K	
RV602	1-238-858-11	RES, ADJ CERMET 47K	
		< FLEXIBLE BOARD >	
W604	1-630-592-11	FP-184 FLEXIBLE BOARD	
		< CRYSTAL >	
X201	1-577-117-21	VIBRATOR, CRYSTAL (4.43 MHz)	
X501	1-578-709-11	VIBRATOR, CRYSTAL (5.85938 MHz)	
X601	1-577-349-21	VIBRATOR, CRYSTAL (16 MHz)	
**********			
		MISCELLANEOUS	
		**********	
	1-590-110-12	CABLE, FLAT (FFC-2)	
	1-569-347-11	CONNECTOR, FPC(TRANSLATION)13P	
	1-636-498-11	PC BOARD, FP316 FLEXIBLE	
	1-542-126-11	MICROPHONE UNIT (ON MA-71P)	
	1-547-445-11	FILTER BLOCK, OPTICAL (ON CD-50P)	
IC901	8-752-606-72	IC ICX045AKA-1 (CCD IMAGER) (ON CD-50P)	
V901	⚠ 1-452-566-11	CRT ASSY (M01KKX07WB10) (ON VF-41P)	
M902	8-835-331-01	MOTOR, DC U-22A (CAPSTAN)	
M903	A-7040-208-A	MOTOR ASSY, THREADING (LOADING)	
	1-547-461-13	LENS, ZOOM (VCL-708WA) (IN M904 IRIS)	
M905	3-707-659-03	MOTOR ASSY, AF/Z GEAR (AUTO FOCUS, ZOOM)	
	1-537-295-31	TERMINAL BOARD, LITHIUM (LITHIUM BATTERY)	
	1-572-496-11	SWITCH, PUSH (ZOOM SWITCH UNIT)	
	1-809-146-11	DISPLAY LIQUID CRYSTAL (LCD BLOCK)	
	1-580-327-11	JACK ASSY, PIN (E, Australian MODEL) (VIDEO, AUDIO IN/OUT, RFU DC OUT)	
	1-580-327-21	JACK ASSY, PIN (AEP, UK MODEL) (VIDEO, AUDIO OUT, RFU DC OUT)	
**********			
		ACCESSORIES AND PACKING MATERIALS	
		**********	
	3-752-246-11	MANUAL, INSTRUCTION (AEP, UK MODEL) (ENGLISH)	
	3-752-246-41	MANUAL, INSTRUCTION (AEP MODEL) (FRENCH, GERMAN, SPANISH)	
	3-752-246-51	MANUAL, INSTRUCTION (AEP MODEL)	

The components identified by mark ⚠ or dotted line with mark ⚠ are critical for safety.
Replace only with part number specified.

When indicating parts by reference number, please include the board name.

Ref. No.	Part No.	Description	Remark
		(DUTCH, SWEDISH, ITALIAN)	
	3-752-246-71	MANUAL, INSTRUCTION (AEP MODEL) (PORTUGUESE)	
	3-752-246-81	MANUAL, INSTRUCTION (AEP MODEL) (DANISH, FINNISH)	
	3-752-247-11	MANUAL, INSTRUCTION (E, Australian MODEL) (ENGLISH)	
	3-752-247-41	MANUAL, INSTRUCTION (E MODEL) (FRENCH, GERMAN, SPANISH)	
	3-752-247-51	MANUAL, INSTRUCTION (E MODEL) (ARABIC)	
	3-752-247-81	MANUAL, INSTRUCTION (E MODEL) (CHINESE)	
*	3-704-281-01	BAG, PROTECTION (STANDARD)	
	3-707-568-01	ADAPTOR, LENS HOOD	
*	3-764-631-12	INSTRUCTION, DEW CONDENSATION (AEP, E MODEL)	
*	3-941-638-02	CUSHION (LOWER)	
		ACCESSORIES AND PACKING MATERIALS (KIT) **********	
	A-6767-706-A	RFU ATDAPTOR (RFU-89EA) (E MODEL)	
	A-6767-707-A	RFU ATDAPTOR (RFU-89EA) (UK MODEL)	
	A-6767-772-A	RFU ATDAPTOR (RFU-90AS) (Australian MODEL)	
	A-6768-254-A	RFU ATDAPTOR (RFU-90E) (AEP MODEL)	
	1-571-164-11	SWITCH, ANTENNA CHANGE (CABLE) (UK, E MODEL)	
	3-712-673-01	SCREWDRIVER (UK, E MODEL)	
	3-741-582-01	BELT, SHOULDER	
*	3-941-564-11	INDIVIDUAL CARTON	
*	3-941-637-01	CUSHION (UPPER)	
**	AC-V35A	AC POWER ADAPTOR	
***	NP-55	BATTERY PACK	

Note

** MARK PARTS IS AVAILABLE FOR REPAIR SERVICE.
*** MARK PARTS IS AVAILABLE AS AN OPTICAL ACCESSORY.

****

HARDWARE LIST

#1	7-621-283-10	SCREW +P 2X10
#2	7-627-553-37	SCREW (M2X3), SPECIAL HEAD
#3	7-627-555-88	SCREW (M1.4X1.8)
#4	7-627-553-68	SCREW, PRECISION +P 2X6 TYPE3

When indicating parts by reference number, please include the board name.

SECTION 7
CAMERA ADJUSTMENTS

During the adjustment, see the arrangement diagram for adjustment parts from page 270.

7-1. PRE-ADJUSTMENT PREPARATIONS (CAMERA BLOCK)

7-1-1. List of Servicing Jigs

- Oscilloscope
- Regulated power supply (2 units)
- Vectorscope
- Digital voltmeter
- Adjusting screwdriver
- Color monitor
- Stop watch

Ref. No.	Part Name	Part No.	Use
J-1	Filter (C14) for color temperature correction	J-6080-058-A	Auto white balance adjustment/confirmation Outdoor white balance adjustment/confirmation
J-2	ND filter 1.0	J-6080-808-A	Max. gain adjustment (two filters used)
	ND filter 0.4	J-6080-806-A	Iris adjustment, Hall in/out adjustment (two used), Max. gain adjustment
	ND filter 0.1	J-6080-807-A	Iris adjustment, Hall in/out adjustment
J-3	Pattern box PTB-500	J-6029-140-A	
J-4	Pattern box color chart	J-6020-250-A	
J-5	Siemens star	J-6080-875-A	For flange back adjustment
J-6	AF microprocessor data reading jig	J-6082-025-A	
J-7	Adjustment remote commander (RM-95 Modification)	J-6082-053-A	
J-8	Extension cord (16P)	J-6082-062-A	Extension cord for cabinet R (during operation)
	Extension cord (14P)	J-6082-061-A	Extension cord for CD-50P board (when repairing VC-81P board)
	Extension cord (20P)	J-6082-063-B	Extension cord for LD-38P board (when repairing VC-81P board)
			Extension cord for TI-32P board (when repairing TI-32P board)
J-9	Extension cord (10P)	J-6082-064-A	Extension cord for JK-67P board (when repairing VS-69 board)
J-10	Extension cord (3P)	J-6082-041-A	Extension cord for cabinet R (during operation)

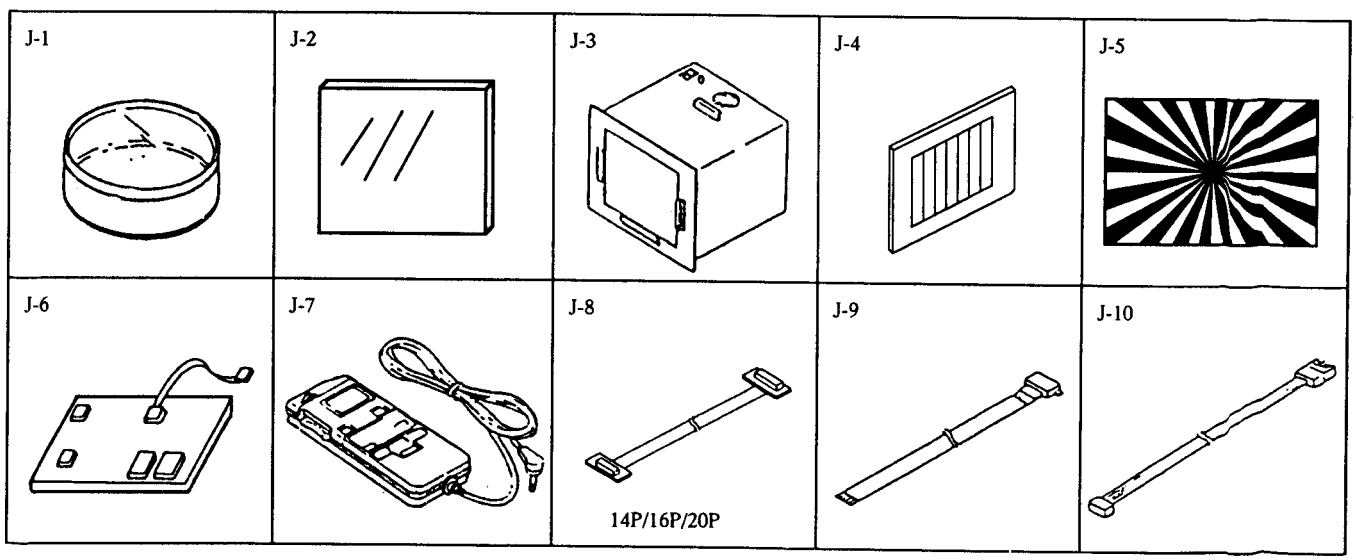

Fig. 7-1.

7-1-2. Preparations

Note: Refer to "2. DISASSEMBY" for details on removal of the cabinet and various boards.

1) Connect the various devices for adjustment as shown in Fig. 7-3.
2) The EVF (electronic viewfinder) is needed for confirmation of the white balance mode and shutter speed. Remove CN205 on the VS-69 board when the EVF is not needed.
3) The mic amplifier (MA-71P board) is not needed. Remove CN402 on the AU-92P board.
4) The LCD block is not needed. Remove CN806 on the VC-81P board.

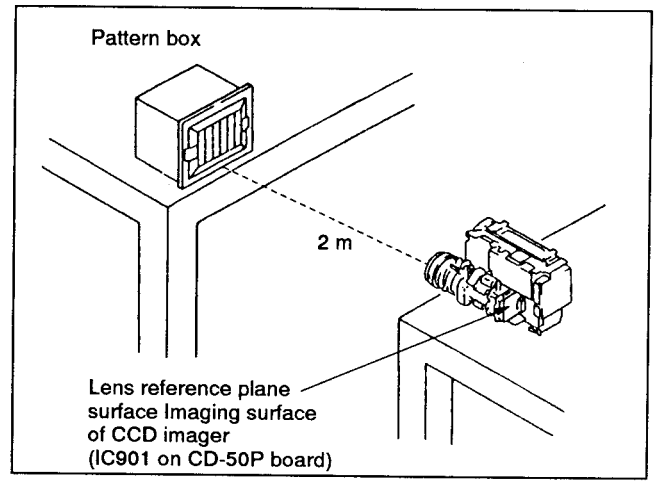

Fig. 7-2.

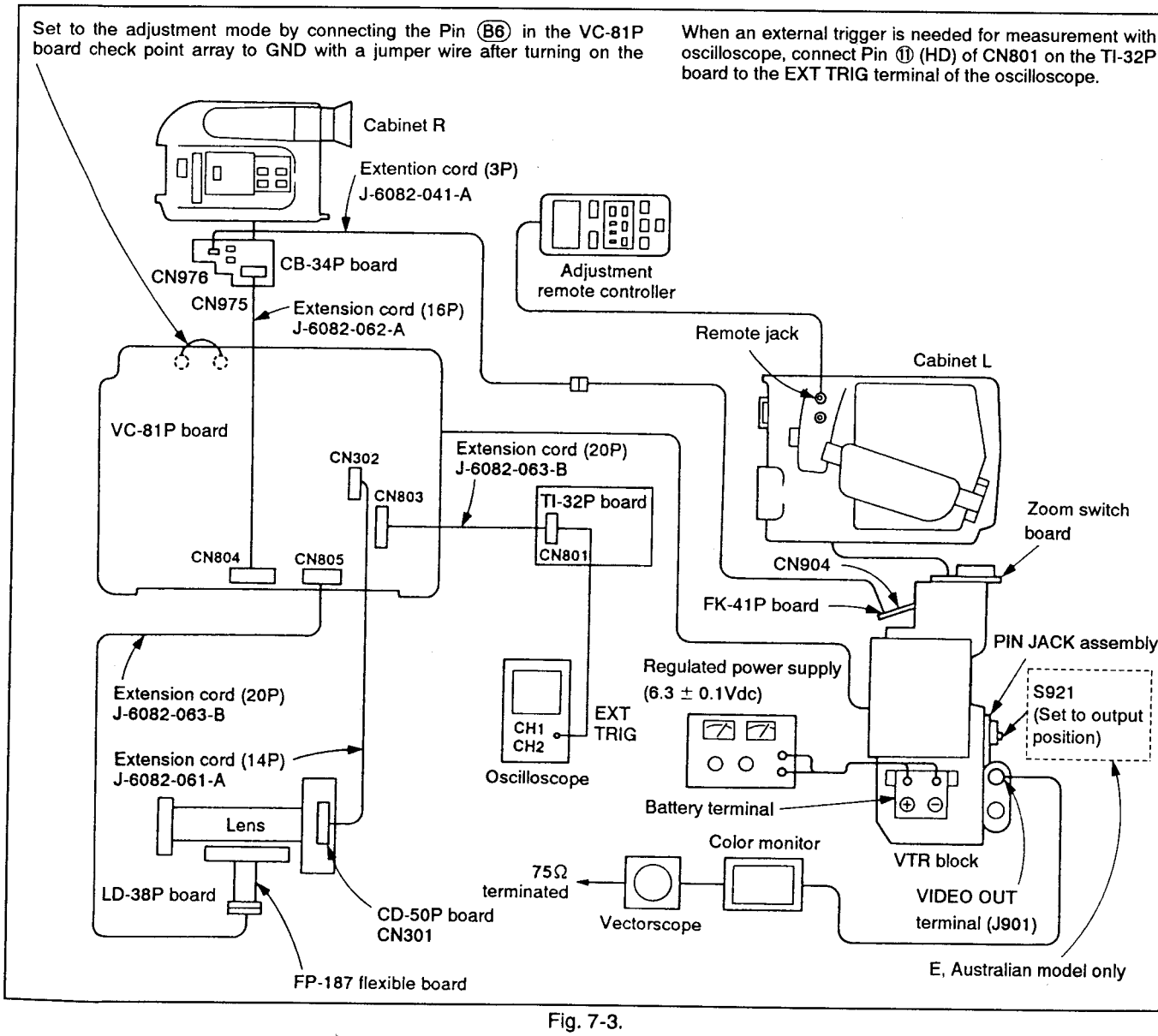

Fig. 7-3.

7-1-3. Precautions

1. Setting of switches

Unless otherwise specified, the switches are set to the following positions and adjustment is made without a cassette inserted.

1. Camera/video power switch (S901 on FK-41P board) .....CAMERA
2. Standby switch (S921 on SW-158P board).....STANDBY
3. Auto-lock switch (S756 on CF-23P board).....OFF
4. White balance button (S757 on CF-23P board) ..... ☼ (indoors white balance mode)
5. Shutter speed button (S760 on CF-23P board) .....NORMAL (1/50)
6. Input/output select switch (S921 on PIN JACK assembly) .....OUTPUT ※ E, Australian model only
7. Back-light correction button (S758 on CF-23P board).....OFF

2. Adjustment order

As a rule, the adjustments are performed in the listed order.

3. Subjects

1) Color bar chart (standard picture frame)
When performing adjustment using the color bar chart, adjust the picture frame shown in Fig. 7-4. (standard picture frame).
2) White pattern (standard picture frame)
Remove the color bar chart from the pattern box and use the zoom lever so that the white pattern has the same size and is in the same position as the color bar chart (standard picture frame).

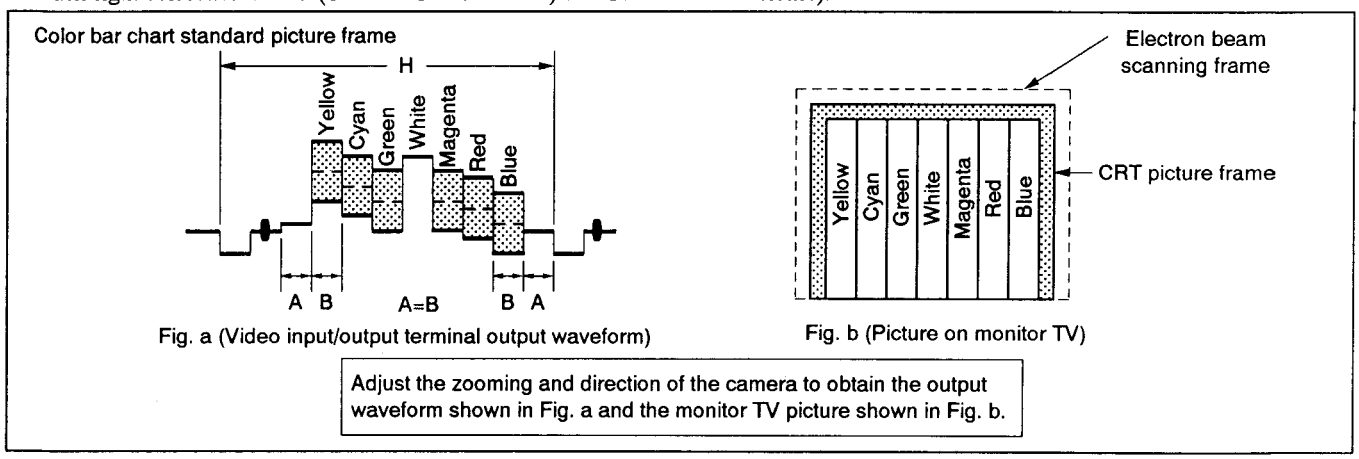

Fig. 7-4.

3) All white pattern
Remove the color bar chart from the pattern box and set the zoom lever fully to the TELE (56 mm) side.
4) High luminance pattern
Create the high luminance pattern as shown in Fig. 7-5., and adjust for the picture frame shown in Fig. 7-6.
5) Siemens star (J-6080-875-A)
Adjust the direction of the camera so that center of the Siemens star is lined up with the center of the monitor screen on the monitor TV screen.

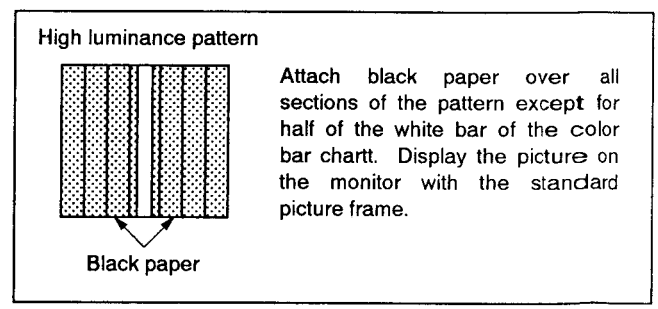

Fig. 7-5.

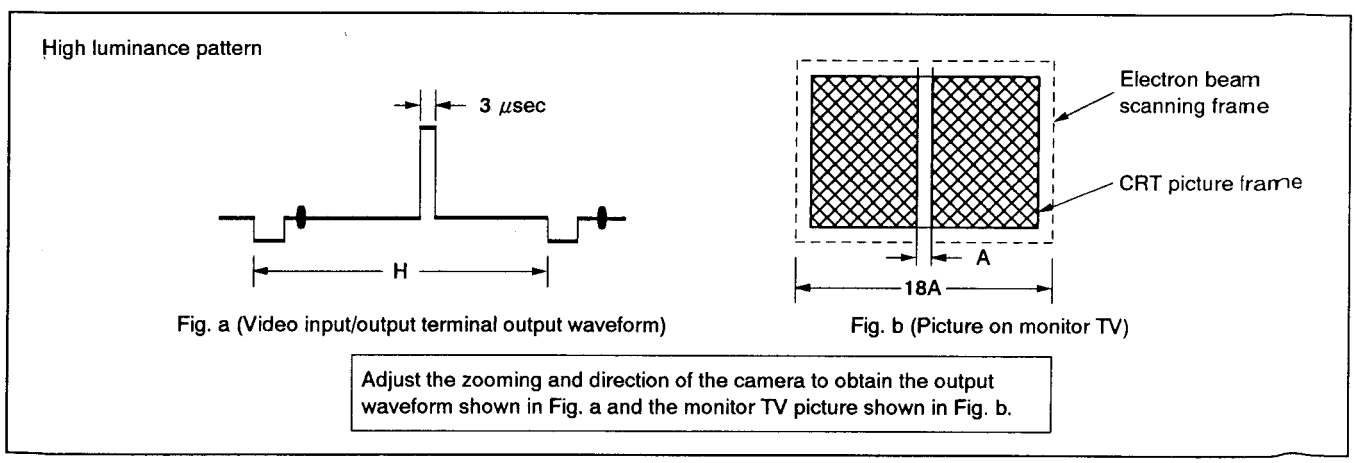

Fig. 7-6.

7-1-4. Adjustment Remote Controller

An EVR (electronic variable resistor) is used as the adjustment element for the camera block, replacing the conventional semi-fixed resistor. The EVR is controlled by the EVR/AWB microprocessor (IC361 on VC-81P board). This microprocessor reads the data written in the nonvolatile memory of the microprocessor and sends it to the EVR. The EVR D-A converts this data (8 bits for each adjustment point) and creates the adjustment voltage.

Thus, it is necessary to change the adjustment data contained in the nonvolatile memory when adjusting the camera block, and the adjustment memory is used for this purpose.

The adjustment remote controller performs bidirectional communications with the camera block microprocessor using the remote control signal lines (LANC). Adjustment addresses and adjustment data increment/decrement commands are sent to the camera block microprocessor from the adjustment remote controller. Adjustment addresses and adjustment data are sent from the camera block microprocessor to the adjustment remote controller.

1. Use of adjustment remote controller

Solder the lead wire to Pin (B6) (refer to 7-1-5.) of the check point array on the VC-81P board.

1) Connect the adjustment remote controller to the remote terminal (J941 on SW-158P board). (Set the HOLD switch of the adjustment remote controller to the HOLD position (SERVICE position).)
2) Turn on the power of the main unit.
3) Connect Pin (B6) (CAM ADJ) of the check point array to GND using a jumper wire.
   (This connection causes the EVR/AWB microprocessor to cease normal remote control operation and to begin adjustment dedicated communications.)
   Note: Be sure to make this connection only after turning on the power. The following will be displayed on the LCD of the adjustment remote controller if the connection is normal. (Adjustment data varies according to the unit.)

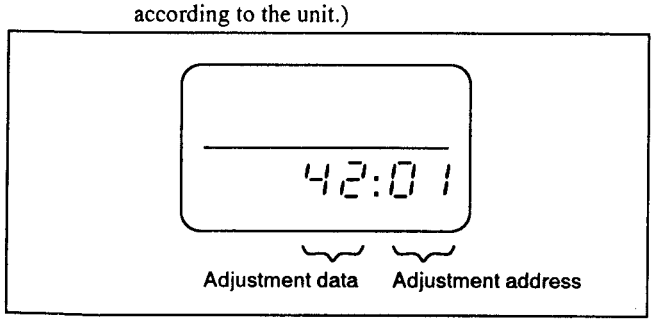

Fig. 7-7.

4) Designate the desired adjustment address using the adjustment remote controller. The adjustment address is incremented by pressing the FF (▶▶) button and decremented by pressing the REW (◀◀) button. (The adjustment address is indicated in hexadecimal, and there are 117 addresses from 01 to 75. The adjustment address corresponds to the EVR (IC252, IC302, IC611 on VC-81P board) output terminals. Refer to Table 7-3. for the adjustment contents of the various addresses.)
5) Perform adjustment by incrementing or decrementing the adjustment data.
   The adjustment data is incremented by pressing the PLAY (▶) button. The adjustment data is decremented by pressing the STOP (■) button.
   - The adjustment data is indicated in hexadecimal. There are 256 values from 00 to FF.

Hexadecimal	0	1	2	3	4	5	6	7	8	9	A	B	C	D	E	F
LCD Indication	0	1	2	3	4	5	6	7	8	9	A	b	c	d	E	F
Decimal equivalent	0	1	2	3	4	5	6	7	8	9	10	11	12	13	14	15

Table 7-1.

   - The adjustment data corresponds to the EVR (IC252, IC302, IC611 on VC-81P board) output voltage, and is as follows.

Adjustment data ( ) is decimal equivalent	EVR output voltage
FF (=255)	Maximum value (approx. 5 Vdc)
F0 (=240)	
E0 (=224)	
D0 (=208)	
C0 (=192)	
B0 (=176)	
A0 (=160)	
90 (=144)	
80 (=128)	Center value (approx. 2.5 Vdc)
70 (=112)	
60 (=96)	
50 (=80)	
40 (=64)	
30 (=48)	
20 (=32)	
10 (=16)	
00 (=0)	Minimum value (approx. 0 Vdc)

Table 7-2.

6) The adjustment address is changed using the FF (▶▶) button or REW (◀◀) button to store the adjustment data in the nonvolatile memory of EVR/AWB microprocessor (IC361 on VC-81P board).
   (The new adjustment data is not stored in the nonvolatile memory unless this operation is performed.)

2. Precautions on use of adjustment remote controller

It is possible to accidentally erase correct adjustment data due to an error in operation of the adjustment remote controller. In order to prevent this, we recommend that you make a note of all adjustment data before adjustment and record the new adjustment data after completing each adjustment item.

Note: Data already described in the adjustment data memo column are fixed data.

Adjustment adderss	Adjustment voltage output terminal	Adjustment item	Remarks	Adjustment data memo column
01	Pin ⑱ of IC252	DELTA R	Auto white balance adjustment	
02	Pin ⑲ of IC252	DELTA B		
03	Pin ② of IC252	FADER	Input FF in fader level adjustment	00
04	Pin ③ of IC252	C PED		A0
05	Pin ④ of IC252	R–Y GAIN	Color reproduction adjustment	
06	Pin ⑤ of IC252	B–Y GAIN		
07	Pin ⑥ of IC252	R–Y HUE		
08	Pin ⑦ of IC252	B–Y HUE		
09	Pin ⑧ of IC252	C LEVEL	Chroma level adjustment	
0A	Pin ⑨ of IC252	TITLE Y	Title Y level adjustment	
0B	Pin ⑫ of IC252	R GAIN	Indoor white balance adjustment	
0C	Pin ⑬ of IC252	B GAIN		
0D	Pin ⑱ of IC302	C1 GAIN	Chroma signal matrix adjustment (1)	
0E	Pin ⑲ of IC302	Y1 GAIN	Y signal matrix adjustment	
0F	Pin ② of IC302	FADER LEVEL		
10	Pin ③ of IC302	BURST LEVEL		
11	Pin ④ of IC302	HUE CONT	Burst phase adjustment	———
12	Pin ⑤ of IC302	SYNC LEVEL		
13	Pin ⑥ of IC302	SET UP		
14	Pin ⑦ of IC302	WHITE CLIP (WC)		
15	Pin ⑧ of IC302	Y LEVEL		
16	Pin ⑨ of IC302	APERTURE		
17	Pin ⑫ of IC302	YH GAIN		
18	Pin ⑬ of IC302	C2 GAIN	Chroma signal matrix adjustment (2)	
19	Pin ⑱ of IC611	IRIS		
1A			Not used	———
1B	Pin ② of IC611	HALL OFFSET	Hall adjustment	
1C	Pin ③ of IC611	MAX GAIN		
1D	Pin ④ of IC611	AGC		
1E	Pin ⑤ of IC611	V SUB		
1F			Not used	———
20	Pin ⑦ of IC611	PG CONT		
21	Pin ⑧ of IC611	TITLE TH	Title A/D level adjustment	
22	Pin ⑨ of IC611	ZOOM L SPD	Power zoom speed fixed data	44
23	Pin ⑫ of IC611	ZOOM H SPD		44
24	Pin ⑬ of IC611	FOCUS SPEED		

Table 7-3. (1)

<table>
<tr><th>Adjustment adderss</th><th>Adjustment voltage output terminal</th><th>Adjustment item</th><th>Remarks</th><th>Adjustment data memo column</th></tr>
<tr><td>25</td><td></td><td>MODE</td><td>The following adjustment modes are selected by changing the adjustment data.<table><tr><th>Adjustment data</th><th>Adjustment mode</th></tr><tr><td>00</td><td>Release</td></tr><tr><td>01</td><td>Focus hunching</td></tr><tr><td>03</td><td>Zoom position</td></tr><tr><td>05</td><td>Hall, iris close</td></tr><tr><td>07</td><td>Hall, iris open</td></tr><tr><td>09</td><td>Hall in/out threshold</td></tr><tr><td>0B</td><td>Auto-focus AGC</td></tr><tr><td>FD</td><td>Auto-focus filter fixed at FA</td></tr><tr><td>FF</td><td>Auto-focus filter fixed at FH</td></tr></table></td><td>00</td></tr>
<tr><td>26</td><td></td><td>FG REF</td><td></td><td>36</td></tr>
<tr><td>27</td><td></td><td>MACRO</td><td></td><td></td></tr>
<tr><td>28</td><td></td><td>IN OUT DOOR</td><td></td><td>1A</td></tr>
<tr><td>29</td><td></td><td>BACK RUSH</td><td></td><td>31</td></tr>
<tr><td>2A</td><td></td><td>BASE-H</td><td></td><td>30</td></tr>
<tr><td>2B</td><td></td><td>LC-THR</td><td></td><td>18</td></tr>
<tr><td>2C</td><td></td><td>SEARCH</td><td></td><td>12</td></tr>
<tr><td>2D</td><td></td><td>HALL OUT</td><td rowspan="2">Hall in/out adjustment</td><td></td></tr>
<tr><td>2E</td><td></td><td>HALL IN</td><td></td></tr>
<tr><td>2F</td><td></td><td>STILL THR1</td><td></td><td>02</td></tr>
<tr><td>30</td><td></td><td>STILL THR2</td><td></td><td>02</td></tr>
<tr><td>31</td><td></td><td>STILL THR3</td><td></td><td>01</td></tr>
<tr><td>32</td><td></td><td>FH W</td><td></td><td></td></tr>
<tr><td>33</td><td></td><td>FH B</td><td></td><td></td></tr>
<tr><td>34</td><td></td><td>AGC W</td><td></td><td></td></tr>
<tr><td>35</td><td></td><td>AGC B</td><td></td><td></td></tr>
<tr><td>36</td><td></td><td>ZOOM THR</td><td></td><td>18</td></tr>
<tr><td>37</td><td></td><td>IRIS THR</td><td></td><td>18</td></tr>
<tr><td>38</td><td></td><td>V PULSE</td><td></td><td>68</td></tr>
<tr><td>39</td><td></td><td>R32MSB</td><td rowspan="6">3200K preset data
(The data written in this column are inputted automatically when performing the auto white balance adjustment.)</td><td></td></tr>
<tr><td>3A</td><td></td><td>R32LSB</td><td></td></tr>
<tr><td>3B</td><td></td><td>B32MSB</td><td></td></tr>
<tr><td>3C</td><td></td><td>B32LSB</td><td></td></tr>
<tr><td>3D</td><td></td><td>G32MSB</td><td></td></tr>
<tr><td>3E</td><td></td><td>G32LSB</td><td></td></tr>
<tr><td>3F</td><td></td><td>START R</td><td rowspan="2">R CONT and B CONT data when starting the auto white balance operation.</td><td rowspan="2">Auto white balance adjustment</td><td></td></tr>
<tr><td>40</td><td></td><td>START B</td><td></td></tr>
<tr><td>41</td><td></td><td>TM DIVID</td><td rowspan="2">Border value of the tracking frame</td><td rowspan="3">Auto white balance fixed data</td><td>44</td></tr>
<tr><td>42</td><td></td><td>BM DIVID</td><td>28</td></tr>
<tr><td>43</td><td></td><td>TOP SLP R</td><td>R CONT coefficient of the upper step of the tracking frame</td><td>80</td></tr>
</table>

Table 7-3. (2)

Adjustment adderss	Adjustment voltage output terminal	Adjustment item	Remarks		Adjustment data memo column
44		TOP SLP B	B CONT coefficient of the upper step of the tracking frame	Auto white balance adjustment	
45		MDL SLP R	R CONT and B CONT coefficient of the middle step of the tracking frame	Auto white balance fixed data	4B
46		MDL SLP B			40
47		BTM SLP R			30
48		BTM SLP B			50
49		KEIKO R			50
4A		KEIKO B			20
4B		TOP UP	Upper and lower limit frames of the upper step of the tracking frame	Auto white balance adjustment	
4C		TOP DWN			
4D		MDL UP	Upper and lower limit frames of the upper, middle and lower steps of the tracking frame	Auto white balance fixed data	85
4E		MDL DWN			70
4F		BTM UP			6E
50		BTM DWN			53
51		KEIKO DWN			58
52		R DWN LMT	R CONT data upper and lower limit of the tracking frame		21
53		R UP LMT			69
54		B UP LMT	B CONT data upper limit of the tracking frame	Auto white balance adjustment	
55		IN BTOP	INDOOR operation frame upper limit of the tracking frame		
56		IN BMAX	B CONT data upper limit of INDOOR mode		
57		OUT BMIN	B CONT data lower limit of OUTDOOR mode		
58		OUT BTM	OUTDOOR mode operation frame lower limit of the tracking frame		
59		B DWN LMT	B CONT data lower limit of the tracking frame	Auto white balance fixed data	10
5A		R OUTDOOR	White balance preset data	Auto white balance adjustment	
5B		B OUTDOOR			
5C		Ra	R CONT and B CONT data of the points a, b and c on the curve of blackbody radiation		
5D		Rb			
5E		Rc			
5F		Ba			
60		Bb			
61		Bc			
62		R/B TOP	Slope data of the curve of blackbody radiation		
63		R/B MDL			
64		R/B BTM			
65		B/R TOP			
66		B/R MDL			
67		B/R BTM			

Table 7-3. (3)

<table>
<tr><th>Adjustment adderss</th><th>Adjustment voltage output terminal</th><th>Adjustment item</th><th colspan="2">Remarks</th><th>Adjustment data memo column</th></tr>
<tr><td>68</td><td></td><td>KEIKO</td><td>Indoor AWB data</td><td rowspan="10">Auto white balance fixed data</td><td>60</td></tr>
<tr><td>69</td><td></td><td>LL LMT</td><td>Minimum tracking illuminance</td><td>08</td></tr>
<tr><td>6A</td><td></td><td>B HUE KEI</td><td rowspan="5">Variable linear matrix data</td><td>00</td></tr>
<tr><td>6B</td><td></td><td>R GAIN OFF</td><td>00</td></tr>
<tr><td>6C</td><td></td><td>R GAIN KEI</td><td>00</td></tr>
<tr><td>6D</td><td></td><td>R HUE OFF</td><td>00</td></tr>
<tr><td>6E</td><td></td><td>R HUE KEI</td><td>00</td></tr>
<tr><td>6F</td><td></td><td>DELAY TM</td><td>Tracking speed</td><td>0C</td></tr>
<tr><td>70</td><td></td><td>FAST TM</td><td>Initial high speed tracking times</td><td>30</td></tr>
<tr><td>71</td><td></td><td>CAM DDS O</td><td colspan="2" rowspan="4">Fixed data</td><td>00</td></tr>
<tr><td>72</td><td></td><td>MODE</td><td>88</td></tr>
<tr><td>73</td><td></td><td>DSP MODE</td><td>00</td></tr>
<tr><td>74</td><td></td><td>CAM ALN</td><td>00</td></tr>
<tr><td>75</td><td></td><td>AWB MODE</td><td colspan="2">The following adjustment modes are selected by changing the adjustment data.
<table>
<tr><th>Adjustment data</th><th>Adjustment mode</th></tr>
<tr><td>00</td><td>Release, factory setting</td></tr>
<tr><td>10</td><td>Auto white balance adjustment mode</td></tr>
<tr><td>E0</td><td>3200K preset data read mode</td></tr>
<tr><td>F0</td><td>Auto white balance tracking zone discrimination invalid. All area discrimination mode.</td></tr>
</table></td><td>00</td></tr>
</table>

Table 7-3. (4)

7-1-5. Check Point Array

Almost all of the measurement points for camera block adjustment are located in the check point array on the VC-81P board. Solder short lead wires onto the terminals needed for adjustment and connect an oscilloscope, etc.
The terminal numbers and signal names for the check point array are shown in Table 7-4.

Terminal No.	Signal Name	Terminal No.	Signal Name
A1	G OUT	B1	N.C
A2	PG CONT	B2	N.C
A3	N.C	B3	Y (LPF) OUT
A4	Y0	B4	V SUB
A5	Y1	B5	AW ADJ
A6	C0	B6	$\overline{\text{CAM ADJ}}$
A7	C1	B7	OFF SET CONT
A8	CAM Y	B8	N.C
A9	YH	B9	N.C
A10	CAM C	B10	GND
A11	IRIS CONT	B11	IRIS DET

* N.C.....no connection

Table 7-4.

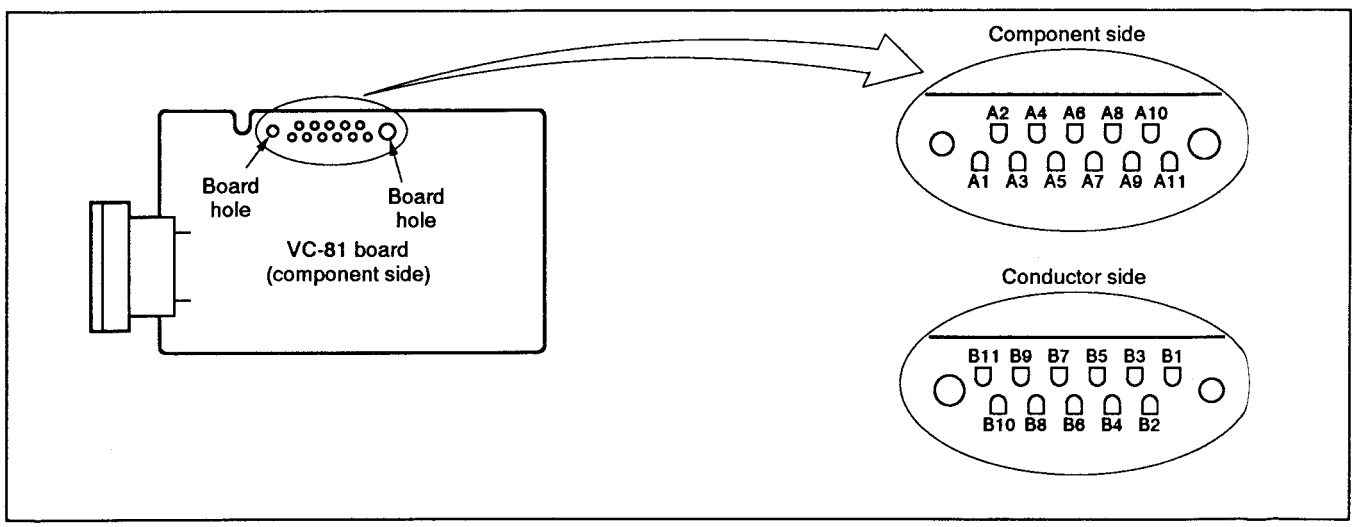

Fig. 7-8.

7-1-6. AF Microprocessor Data Reading Jig

The AF microprocessor data reading jig converts the serial data (output data varies according to hall (iris) state, focus state, focus motor speed, zoom ring position, etc.) for adjustment output from the AF microprocessor (IC613 on VC-81P board) into a 2-digit hexadecimal code and displays it on the LED.

Connections:
Connect as shown in the diagram below.

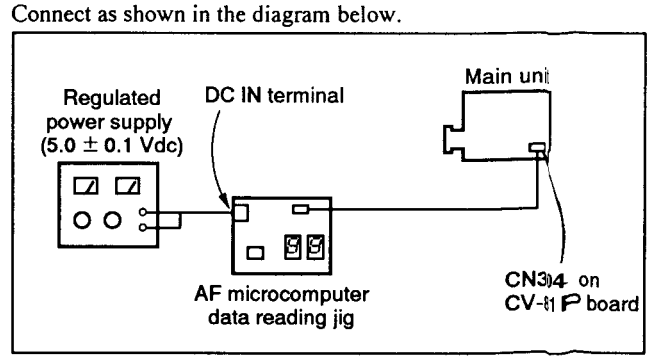

Fig. 7-9.

7-1-7. Data Processing

For some of the adjustment items, calculation from the data (hexadecimal) indicated on the AF microprocessor data reading jig and adjustment remote controller is needed to obtain the adjustment data. In these cases, convert the hexadecimal values to decimal before calculation and reconvert the result to hexadecimal to obtain the adjustment data. A hexadecimal — decimal conversion table is shown in Table 7-5.

Hexadecimal-Decimal Conversion Table

Hexadecimal lower digit / Hexadecimal upper digit	0	1	2	3	4	5	6	7	8	9	A (A)	B (b)	C (c)	D (d) ②	E (E)	F (F)
0	0	1	2	3	4	5	6	7	8	9	10	11	12	13	14	15
1	16	17	18	19	20	21	22	23	24	25	26	27	28	29	30	31
2	32	33	34	35	36	37	38	39	40	41	42	43	44	45	46	47
3	48	49	50	51	52	53	54	55	56	57	58	59	60	61	62	63
4	64	65	66	67	68	69	70	71	72	73	74	75	76	77	78	79
5	80	81	82	83	84	85	86	87	88	89	90	91	92	93	94	95
6	96	97	98	99	100	101	102	103	104	105	106	107	108	109	110	111
7	112	113	114	115	116	117	118	119	120	121	122	123	124	125	126	127
8	128	129	130	131	132	133	134	135	136	137	138	139	140	141	142	143
9	144	145	146	147	148	149	150	151	152	153	154	155	156	157	158	159
A(A)	160	161	162	163	164	165	166	167	168	169	170	171	172	173	174	175
① → B(b)	176	177	178	179	180	181	182	183	184	185	186	187	188	189	190	191
C(c)	192	193	194	195	196	197	198	199	200	201	202	203	204	205	206	207
D(d)	208	209	210	211	212	213	214	215	216	217	218	219	220	221	222	223
E(E)	224	225	226	227	228	229	230	231	232	233	234	235	236	237	238	239
F(F)	240	241	242	243	244	245	246	247	248	249	250	251	252	253	254	255

Note: ( ) is the indication on the jig or adjustment remote commander.

Example: The indication on the jig or adjustment remote commander is BD (b d).
As the upper digit is B (b) and the lower digit is D (d), a decimal value of 189 is obtained from the intersection of ① and ② in the above table.

Table 7-5.

7-2. CAMERA SYSTEM ADJUSTMENTS

7-2-1. Flange Back Adjustment

Subject	Siemens star (2 m directly in front of lens reference plane (CCD imager))
Measurement Point	Check with a monitor TV
Measuring Instrument	
Adjusting Element	Flange back adjusting pin
Tools	Phillips screwdriver, flat blade (–) screwdriver

Adjusting method:

1) Press the FOCUS switch (S759 on CF-23P board) to set to the MANUAL mode.
2) Position a Siemens star 2 m directly in front of the lens reference plane (See Fig. 7-2.).
3) Orient the camera block to have the center of the Siemens star imaged on the monitor TV screen coincide with the monitor screen center.
4) Check to assure the smooth motion of the lens zoom lever to both its extreme WIDE position (7 mm) and TELE position (56 mm), and then set it at the extreme WIDE position. (In this process, also check the monitor image to assure proper zooming operation.)
5) Select adjustment address 25 with the adjustment remote controller and enter adjustment data of 07. (Iris open mode) At this time, adjust the illumination on the Siemens star or place an ND filter over the lens, and confirm that the proper image is displayed on the monitor TV screen.
6) Set the lens focusing mark at the center of "2".

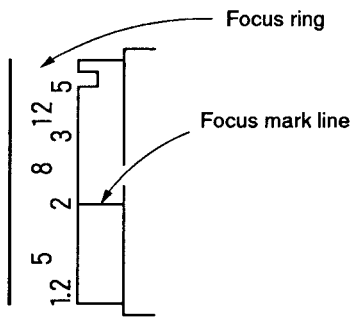

Fig. 7-10.

7) Loosen flange back setscrew ❶ with a Phillips screwdriver. (See Fig. 7-12.)
8) By turning the flange back adjusting Pin ❷ while watching the monitor screen, attain the optimum definition of a wedge at the Siemens star center on the screen. (Turn it a few turns to the left and right to ensure optimum definition.)
   Note: Do not turn the adjusting pin excessively in either direction.
9) While holding the flange back adjusting Pin ❷ to prevent further rotation, retighten the flange back setscrew ❶.
10) With the zoom lever fixed at its WIDE end, turn the focusing ring and set it to the position that provides the optimum definition image of the wedge. Check to assure the focusing mark protrusion position is within the range shown in Fig. 7-11. Also, rotate the focusing ring to the close (1.2 m) and far (∞) extremes and confirm that the wedge is no longer in focus.

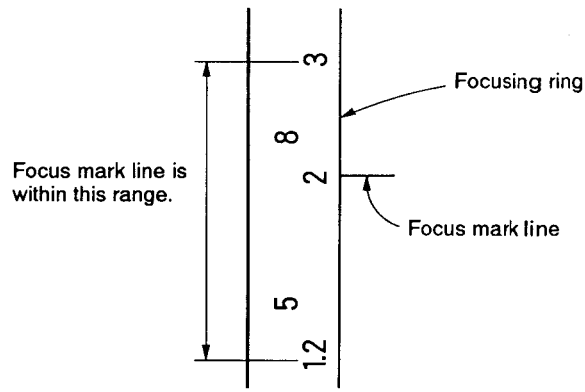

Fig. 7-11.

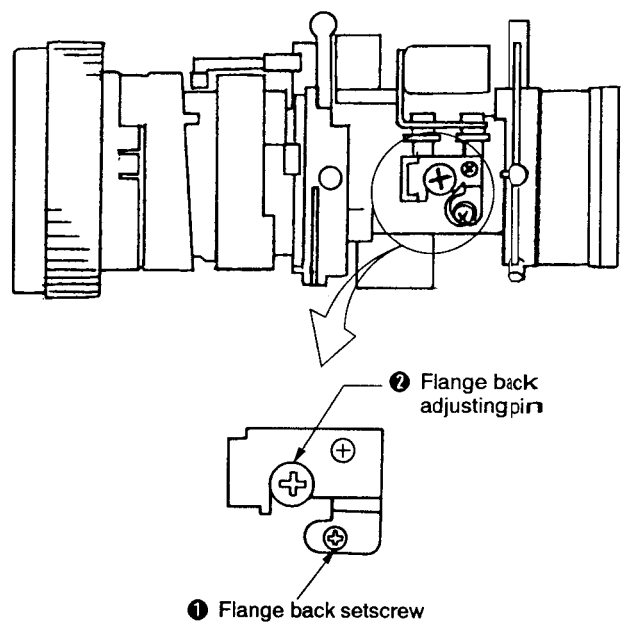

Fig. 7-12.

11) Fix the zoom lever at the extreme TELE position.
12) Turn the focusing ring and stop at the position where the wedge has optimum definition.
    Confirm that the focus mark is within ± 1.5 mm of "2".
13) Select adjustment address 25 with the adjustment remote controller and enter adjustment data of 00. (Iris normal)
14) Change the adjustment address to store the adjustment data in the memory.

7-2-2. Power Supply Adjustment

1 Power Supply Check (VC-81P Board)

Measuring Instrument	Digital voltmeter
CAM 5V Check	
Measurement Point	Pin ④ of W801
Specified Value	4.90 ± 0.05 Vdc
23V Check	
Measurement Point	Pin ① of W801
Specified Value	23.08 ± 0.50 Vdc
15V Check	
Measurement Point	Pin ② of W801
Specified Value	15.0 ± 0.5 Vdc
− 9V Check	
Measurement Point	Pin ③ of W801
Specified Value	−9.0 ± 0.5 Vdc

Checking method:

1) Confirm that each power supply voltage meet the specified value. If not, perform the power supply adjustment.

2 Power Supply Adjustment (DD-31P Board)

Measuring Instrument	Digital voltmeter
CAM 5V Adjustment	
Measurement Point	Pin ④ of CN103
Adjusting Element	RV102
Specified Value	4.90 ± 0.01 Vdc
CAM15V Adjustment	
Measurement Point	Pin ② of CN103
Adjusting Element	RV104
Specified Value	15.0 ± 0.03 Vdc

Adjusting method:

1) Adjust to the specified value with the corresponding adjusting elements.

7-2-3. EVR Initial Settings

Set to the following initial settings of the adjustment data only when the EVR/AWB microprocessor (IC361 on VC-81P board) was replaced.

Adjustment address	Adjustment data initial value	Adjustment address	Adjustment data initial value	Adjustment address	Adjustment data initial value
01 (DELTA R)	50	2A (BASE H)	30	4E (MDL DWN)	70
02 (DELTA B)	50	2B (LC-THR)	18	4F (BTM UP)	6E
03 (FADER OUT)	00	2C (SEARCH)	12	50 (BTM DWN)	53
04 (C-PED)	A0	2F (STILL THR1)	02	51 (KEIKO DWN)	58
0F (FADER LEVEL)	A0	30 (STILL THR2)	02	52 (R DWN LMT)	21
12 (SYNC LEVEL)	90	31 (STILL THR3)	01	53 (R TOP LMT)	69
13 (SET UP)	A0	32 (FH W)	00	59 (B DWN LMT)	10
14 (WC)	FF	33 (FH B)	01	68 (KEIKO)	60
15 (Y LEVEL)	A0	34 (AGC W)	10	69 (LL LMT)	08
17 (YH GAIN)	FF	35 (AGC B)	3F	6A (B HUE KEI)	00
19 (IRIS)	FF	36 (ZOOM THR)	18	6B (R GAIN OFF)	00
1C (MAX GAIN)	C0	37 (IRIS THR)	18	6C (R GAIN KEI)	00
1D (AGC)	FF	38 (V PULSE)	68	6D (R HUE OFF)	00
1E (V SUB)	40	41 (TM DIVID)	44	6E (R HUE KEI)	00
20 (PG CONT)	A0	42 (BM DIVID)	28	6F (DELAY TM)	0C
21 (TITLE TH)	FF	43 (TOP SLP R)	80	70 (FAST TM)	30
22 (ZOOM L SPD)	44	45 (MDL SLP R)	4B	71 (CAM DDSO)	00
23 (ZOOM H SPD)	44	46 (MDL SLP B)	40	72 (MODE)	88
24 (FOCUS SPEED)	40	47 (BTM SLP R)	30	73 (DSP MODE)	00
26 (FG REF)	36	48 (BTM SLP B)	50	74 (CAM ALN)	00
27 (MACRO)	09	49 (KEIKO R)	50	75 (AWB MODE)	00
28 (IN/OUT DOOR)	1A	4A (KEIKO B)	20		
29 (BACK RUSH)	31	4D (MDL UP)	85		

Table 7-6.

Adjusting method:

1) Set the RV701 (HALL ADJ) on the LD-38P board to the mechanical center.
2) Set the adjustment data at the various adjustment addresses to the initial values using the adjustment remote controller.
3) Change the adjustment address to store the last adjustment data in the memory.

7-2-4. 28MHz Local Oscillation Adjustment (VC-81P Board)

Subject	Not needed
Measurement Point	Pin ㉘ of IC612
Measuring Instrument	Frequency counter
Adjustment Address	CT143
Specified Value	14.187500 ± 0.00007 MHz

Adjusting method:

1) Adjust CT143 so that the oscillating frequency is 14.187500 ± 0.00007 MHz.

7-2-5. PLL Adjustment (VC-81P board)

Subject	Not needed
Measurement Point	R152 side terminal of C152 or Pin ⑳ of IC141
Measuring Instrument	Digital voltmeter
Adjustment Element	CT142
Specified Value	2.5 ± 0.2 Vdc

Adjusting method:

1) Adjust to 2.5 ± 0.2 Vdc with CT142.

7-2-6. PG CONT and Vsub Adjustment

1. PG CONT adjustment (VC-81P board)

Subject	Not needed
Measurement Point	Pin (A2) (PG CONT) of check point array
Measuring Instrument	Digital voltmeter
Adjustment Address	20 (PG CONT)
Specified Value	(Voltage indicated by the imager) ± 0.1 Vdc

Adjusting method:

1) Change the adjustment data at adjustment address 20 using the adjustment remote controller to set the PG CONT voltage to (voltage indicated by the imager) ± 0.1 Vdc.
2) Change the adjustment address to store the adjustment data in the memory.

2. Vsub adjustment (VC-81P board)

Subject	Not needed
Measurement Point	Pin (B4) (V SUB) of check point array
Measuring Instrument	Digital voltmeter
Adjustment Address	1E (V SUB)
Specified Value	(Voltage indicated by the imager) ± 0.1 Vdc

Adjusting method:

1) Change the adjustment data at adjustment address 1E using the adjustment remote controller to set the VSUB voltage to (voltage indicated by the imager) ± 0.1 Vdc.
2) Change the adjustment address to store the adjustment data in the memory.

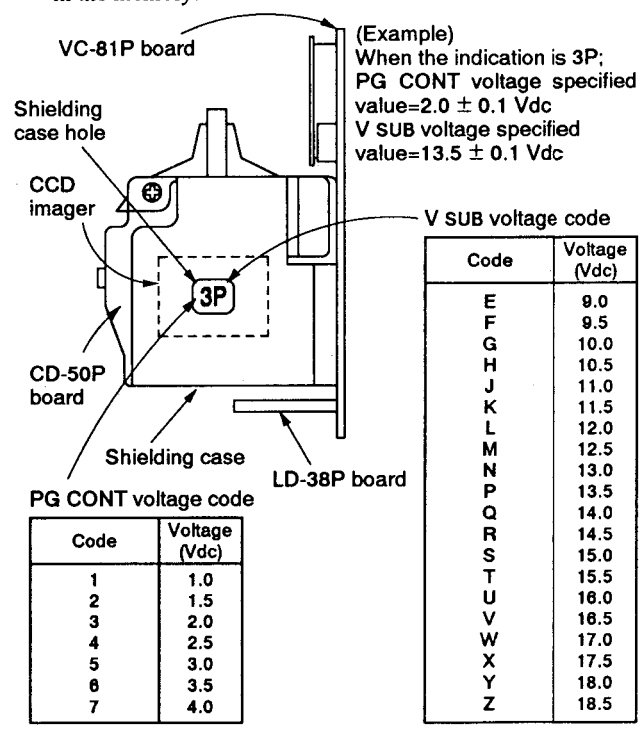

Code	Voltage (Vdc)
1	1.0
2	1.5
3	2.0
4	2.5
5	3.0
6	3.5
7	4.0

Code	Voltage (Vdc)
E	9.0
F	9.5
G	10.0
H	10.5
J	11.0
K	11.5
L	12.0
M	12.5
N	13.0
P	13.5
Q	14.0
R	14.5
S	15.0
T	15.5
U	16.0
V	16.5
W	17.0
X	17.5
Y	18.0
Z	18.5

Fig. 7-13.

7-2-7. Hall Adjustment (LD-38P Board)

Subject	All black (cover lens with black cap)
Measurement Point	CN304 on the VC-81P board
Measuring Instrument	AF microprocessor data reading jig
Adjusment Address	1B (Hall Offset)
Adjusting Element	RV701
Specified Value	When iris closed: Minimum value of 01 to 04 When iris open: 3D or 3E

Preparations:

1) Prepare a 1 kΩ resistor for connecting Pin (A11) (IRIS CONT) of the check point array and CAM 5V (Pin ④ of W801).

Adjusting method:

1) Set RV701 to the mechanical center.
2) Set the adjustment address to 25 with the adjustment remote controller, and set the adjustment data to 05. At the same time, connect Pin (A11) of the check point array and CAM 5V using 1 kΩ resistance. (Setting when iris closed)
3) Change the adjustment address to 1B.
4) Change the adjustment data until the indication on the AF microprocessor data reading jig is the minimum value in the range of 01 to 04. (Hall offset adjustment)
5) Change the adjustment address to 25 and set the adjustment data to 07. At the same time, remove the 1 kΩ resistance at Pin (A11) of the check point array. (Setting when iris open)
6) Adjust RV701 until the indication on the AF microcomputer data reading jig is either 3D or 3E. (3D is indicated as 3d .)
7) Repeat steps 2) through 6) until meet the specified values.
8) Set the adjustment address to 25 and set the adjustment data to 00. (Releases adjustment mode)
9) Change the adjustment address to store the adjustment data in the memory.

7-2-8. Iris Adjustment (VC-81P Board)

Subject	Color bar chart standard picture frame
Filter	ND filter 0.4 and 0.1
Measurement Point	Pin(B11) (CCD OUT) of check point array
Measuring Instrument	Oscilloscope
Adjustment Address	19 (Iris)
Specified Value	150 ± 10 mVp-p

Adjusting method:

1) Set the adjustment address to 19 with the adjustment remote controller.
2) Without attaching an ND filter, change the adjustment data with the adjustment remote controller to set the IRIS OUT signal level to 150 ± 10 mVp-p.
3) Attach the ND filter 0.5 (0.4+0.1) to the front of the lens and confirm that there is a smooth change in the signal level.
4) Remove the ND filter and confirm that the signal level is 150 ± 10 mVp-p.
5) Repeat 2) through 4) if the specified value is not met.
6) Change the adjustment address to store the adjustment data in the memory.

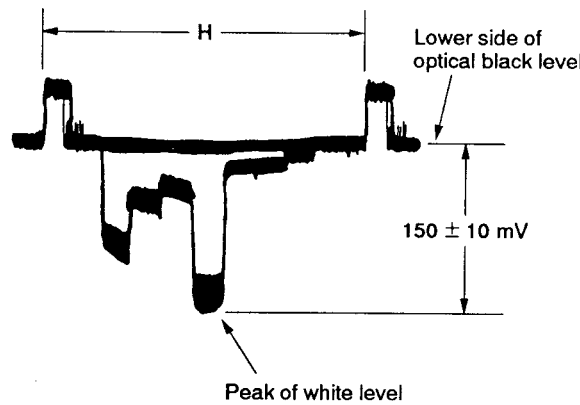

Fig. 7-14.

7-2-9. Hall In/Out Adjustment (VC-81P Board)

Subject	White pattern standard picture frame
Filter	ND filter 0.4 (two) and 0.1 (one)
Measurement Point	CN304
Measuring Instrument	AF microprocessor data reading jig
Adjustment Address	2E (HALL IN) 2D (HALL OUT)

Adjusting method:

1) Cover the lens with the ND filter 0.8 (0.4+0.4).
2) Set the adjustment address to 25 with the adjustment remote controller and set the adjustment data to 09. (Hall in/out threshold mode setting)
3) Read the data indicated on the AF microprocessor data reading jig and set this data to the adjustment address 2E.
4) Remove the ND filter 0.8 and replace it with ND filter 0.5 (0.4+0.1).
5) Read the data indicated on the AF microprocessor data reading jig and set this data to the adjustment address 2D.
6) Change the adjustment address to 25 and set the adjustment data to 00. (Releases hall in/out threshold mode)
7) Change the adjustment address to store the adjustment data in the memory.

7-2-10. AGC Adjustment (VC-81P Board)

Subject	Color bar chart standard picture frame
Measurement Point	Pin (B3) (Y (LPF) OUT) of check point array
Measuring Instrument	Oscilloscope
Adjustment Address	1D (AGC)
Specified Value	160 ± 5 mVp-p

Adjusting method:

1) Set the adjustment address to 1D using the adjustment remote controller.
2) Change the adjustment data with the adjustment remote controller to set the Y (LPF) signal level to 160 ± 5 mVp-p.
3) Change the adjustment address to store the adjustment data in the memory.

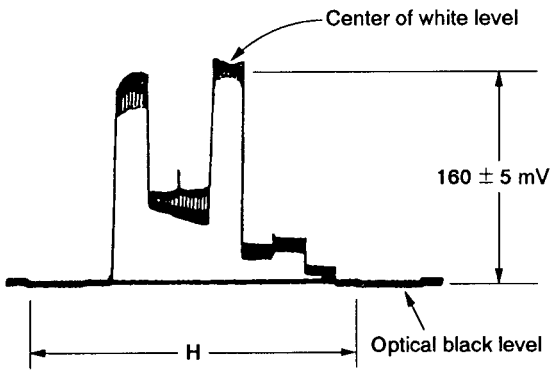

Fig. 7-15.

7-2-11. Y Signal Matrix Adjustment (VC-81P Board)

Subject	Color bar standard picture frame
Measurement Point	1: Pin (A4) (Y0) of check point array 2: Pin (A5) (Y1) of check point array
Measuring Instrument	Oscilloscope
Adjustment Address	0E (Y1 GAIN)
Specified Value	Y1 signal level=Y0 signal level

Note: Attach 10 kΩ registor to tip of the probe (10:1).

Adjusting method:

1) Connect the oscilloscope to Pin (A4) of the check point array and measure the Y0 signal level.
2) Connect the oscilloscope to Pin (A5) of the check point array.
3) Set the adjustment address to 0E using the adjustment remote controller.
4) Change the adjustment data until the Y1 signal level is the same as the Y0 signal level measured in 1).
5) Change the adjustment address to store the adjustment data in the memory.

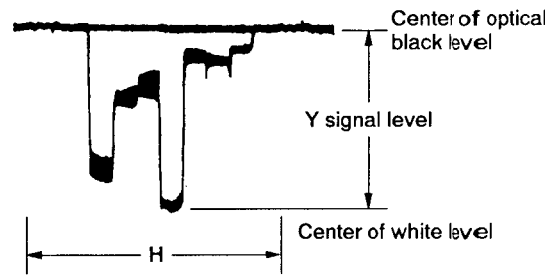

Fig. 7-16.

7-2-12. Chroma Signal Matrix Adjustment (1) (VC-81P Board)

Subject	Color bar standard picture frame
Measurement Point	1: Pin (A6) (C0) of check point array 2: Pin (A7) (C1) of check point array
Measuring Instrument	Oscilloscope
Adjustment Address	0D (C1 GAIN)
Specified Value	C1 signal level=C0 signal level

Note: Attach 10 kΩ registor to tip of the probe (10:1).

Adjusting method:

1) Connect the oscilloscope to Pin (A6) of the check point array and measure the C0 signal level. (The C0 signal level is the larger of the CR and CB signal levels.)
2) Connect the oscilloscope to Pin (A7) of the check point array.
3) Set the adjustment address to 0D using the adjustment remote controller.
4) Change the adjustment data until the C1 signal level is the same as the C0 signal level measured in 1).
5) Change the adjustment address to store the adjustment data in the memory.

Fig. 7-17. C0 and C1 signal levels

7-2-13. Chroma Signal Matrix Adjustment (2) (VC-81P Board)

Subject	Color bar standard picture frame
Measurement Point	CH1 (X): emitter of Q257 (B–Y) CH2 (Y): emitter of Q255 (R–Y)
Measuring Instrument	Oscilloscope (X-Y mode)
Adjustment Address	18 (C2 GAIN)
Specified Value	Separate color luminance points become one.

Note: Adjustment can be made in the same manner using a vectorscope.
(Vectorscope connection terminal: video output terminal)

Adjusting method:

1) Set the adjustment address to 18 using the adjustment remote controller.
2) Change the adjustment data so that the two separate color luminance points become one respectively.
3) Change the adjustment address to store the adjustment data in the memory.

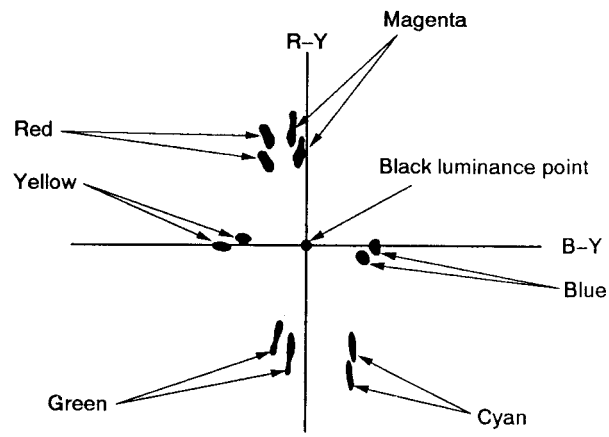

Fig. 7-18.

7-2-14. YH Level Adjustment (VC-81P Board)

Subject	Color bar chart standard picture frame
Measurement Point	Pin (A9) (YH) of check point array
Measuring Instrument	Oscilloscope
Adjustment Address	17 (YH LEVEL)
Specified Value	900 ± 40 mVp-p

Adjusting method:

1) Set the adjustment address to 17 with the adjustment remote controller.
2) Change the adjustment data with the adjustment remote controller to set the YH signal level to 900 ± 40 mVp-p.
3) Change the adjustment address to store the adjustment data in the memory.

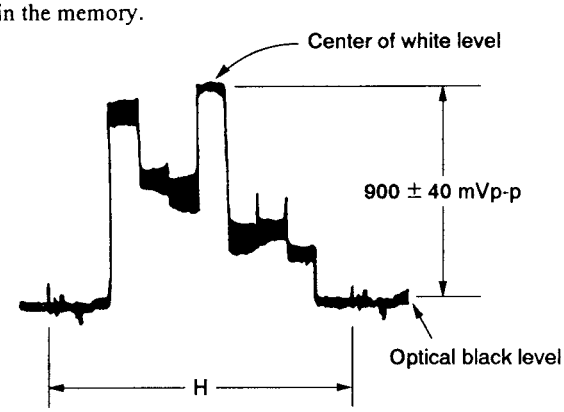

Fig. 7-19.

7-2-15. Sync Level Adjustment (VC-81P Board)

Subject	All black (cover lens with black cap)
Measurement Point	Pin (A8)(CAM Y) of check point array
Measuring Instrument	Oscilloscope
Adjustment Address	12 (SYNC LEVEL)
Specified Value	300 ± 5 mVp-p

Adjusting method:

1) Set the adjustment address to 12 with the adjustment remote controller.
2) Change the adjustment data with the adjustment remote controller to set the sync level to 300 ± 5 mVp-p.
3) Change the adjustment address to store the adjustment data in the memory.

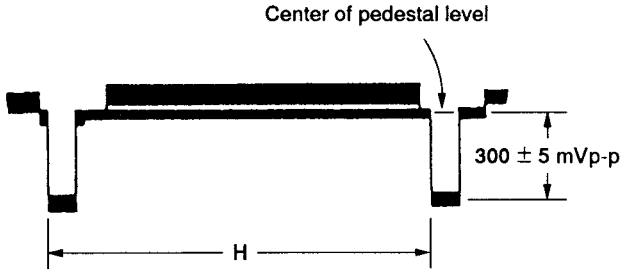

Fig. 7-20.

7-2-16. Setup Adjustment (VC-81P Board)

Subject	All black (cover lens with black cap)
Measurement Point	Pin (A8)(CAM Y) of check point array
Measuring Instrument	Oscilloscope
Adjustment Address	13 (SET UP)
Specified Value	30 ± 10 mV

Note: 1) and 2) are steps taken to reduce noise.

Adjusting method:

1) Set the address to 16 (APERTURE) with the adjustment remote controller, and enter 00 as the adjustment data after making a note of the adjustment data for this address.
2) Set the address to 1C (MAX GAIN) with the adjustment remote controller, and enter 00 as the adjustment data after making a note of the adjustment data for this address.
3) Set the adjustment address to 13 with the adjustment remote controller.
4) Change the adjustment data with the adjustment remote controller to set the setup level to 30 ± 10 mV.
5) Set the adjustment address to 16 and enter the adjustment data recorded in 1).
6) Set the adjustment address to 1C and enter the adjustment data recorded in 2).
7) Change the adjustment address to store the adjustment data in the memory.

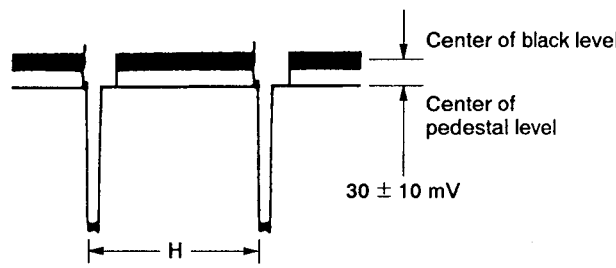

Fig. 7-21.

7-2-17. White Clip Adjustment (VC-81P Board)

Subject	High luminance pattern
Measurement Point	Pin (A8) (CAM Y) of check point array
Measuring Instrument	Oscilloscope
Adjustment Address	14 (WHITE CLIP)
Specified Value	840 ± 20 mV

Adjusting method:

1) Set the adjustment address to 15 with the adjustment remote controller, and make a note of the adjustment data for this address.
2) Set the adjustment data to 40 with the adjustment remote controller.
3) Set the adjustment address to 14 with the adjustment remote controller.
4) Change the adjustment data with the adjustment remote controller to set the white clip level to 840 ± 20 mV.
5) Set the adjustment address to 15 and enter the adjustment data recorded in 1).
6) Change the adjustment address to store the adjustment data in the memory.

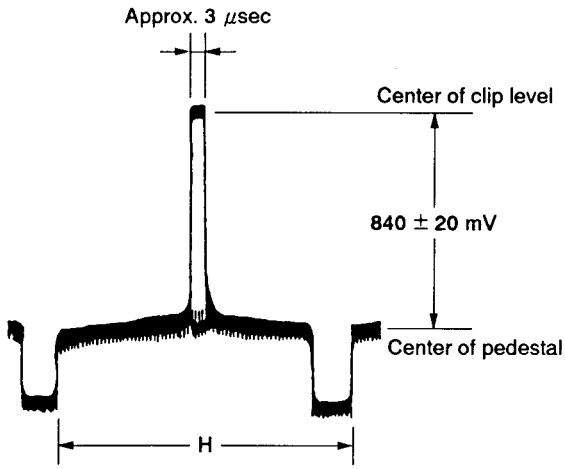

Fig. 7-22.

7-2-18. Y Level Adjustment (VC-81P Board)

Subject	Color bar chart standard picture frame
Measurement Point	Pin (A8) (CAM Y) of check point array
Measuring Instrument	Oscilloscope
Adjustment Address	15 (Y LEVEL)
Specified Value	640 ± 10 mV

Adjusting method:

1) Set the adjustment address to 14 with the adjustment remote controller, and make a note of the adjustment data for this address.
2) Set the adjustment data to FF with the adjustment remote controller.
3) Set the adjustment address to 15 with the adjustment remote controller.
4) Change the adjustment data with the adjustment remote controller to set the Y signal level to 640 ± 10 mV.
5) Set the adjustment address to 14 and enter the adjustment data recorded in 1).
6) Change the adjustment address to store the adjustment data in the memory.

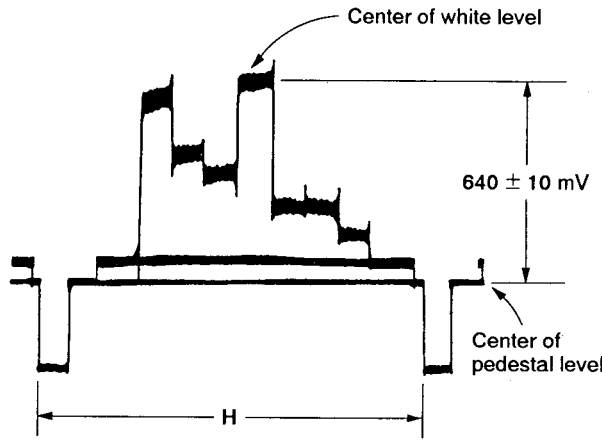

Fig. 7-23.

7-2-19. Max. Gain Adjustment (VC-81P Board)

Subject	Color bar chart standard picture frame
Filter	ND filters 1.0 (two), 0.4 (one), 0.1 (one)
Measurement Point	Pin (A8) (CAM Y) of check point array
Measuring Instrument	Oscilloscope
Adjustment Address	1C (MAX GAIN)
Specified Value	260 ± 10 mV

Adjusting method:

1) Cover the lens with the ND filter 2.5 (1.0+1.0+0.4+0.1).
2) Set the adjustment address to 1C with the adjustment remote controller.
3) Change the adjustment data with the adjustment remote controller to set the Y signal level to 260 ± 10 mV.
4) Change the adjustment address to store the adjustment data in the memory.

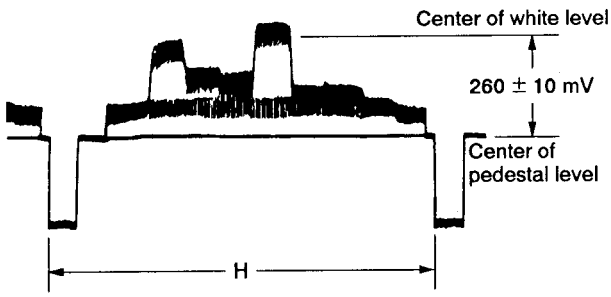

Fig. 7-24.

7-2-20. Aperture Adjustment (VC-81P Board)

Subject	Color bar chart standard picture frame
Measurement Point	Pin (A8) (CAM Y) of check point array
Measuring Instrument	Oscilloscope
Adjustment Address	16 (APERTURE)
Specified Value	260 ± 10 mV

Adjusting method:

1) Set the adjustment address to 16 with the adjustment remote controller.
2) Focus the camera and set the aperture level (lower peak between green and white) to maximum.
3) Change the adjustment data to set the lower peak between green and white to 260 ± 10 mV above the pedestal level.
4) Change the adjustment address to store the adjustment data in the memory.

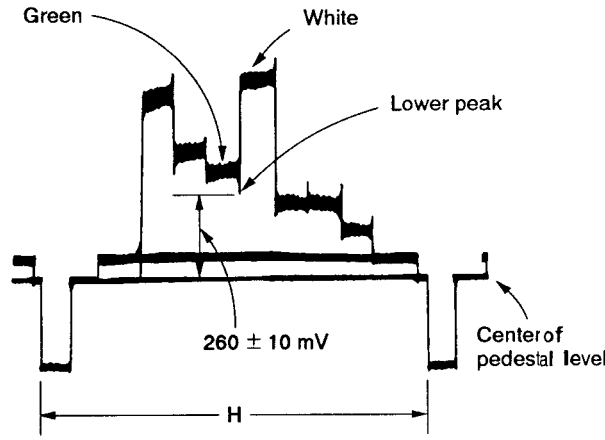

Fig. 7-25.

7-2-21. Chroma Level Adjustment (VC-81P Board)

Subject	Color bar chart standard picture frame
Measurement Point	Pin (A1) (G OUT) of check point array
Measuring Instrument	Oscilloscope
Adjustment Address	09 (C LEVEL)
Specified Value	320 ± 20 mVp-p

Connections:

1) Connect Pin (B7) (OFFSET CONT) of the check point array to GND using a jumper wire.

Adjusting method:

1) Set the adjustment address to 09 with the adjustment remote controller.
2) Change the adjustment data with the adjustment remote controller to set the G OUT signal level to 320 ± 20 mVp-p.
3) Change the adjustment address to store the adjustment data in the memory.

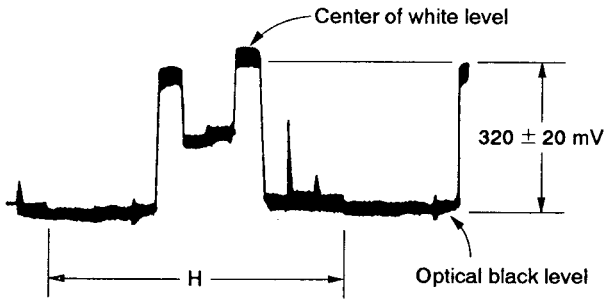

Fig. 7-26.

7-2-22. Burst Phase Adjustment (VC-81P Board) (Method Using Vectorscope)

Subject	All black (cover lens with black cap)
Measurement Point	VIDEO output terminal
Measuring Instrument	Vectrscope
Adjustment Address	11 (HUE CONT)
Specified Value	135° ± 2°

Adjustment method:

1) Set adjustment address to 11 with the adjustment remote controller.
2) Change adjustment data so as to set the burst luminance point in the 135° ± 2° position.
3) Change the adjustment address to store the adjustment data in the memory.
4) Perform Burst Level Adjustment.

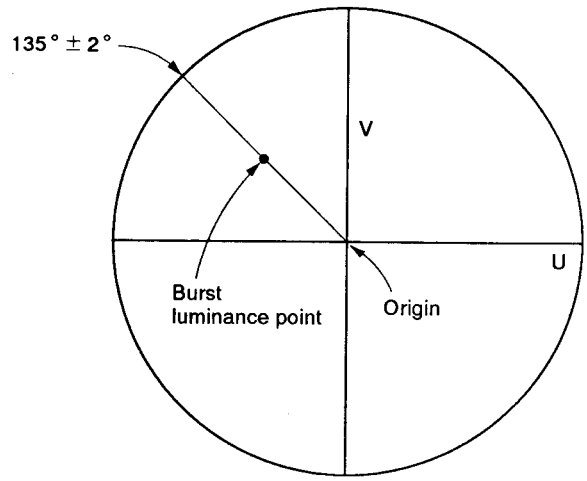

Fig. 7-27.

7-2-23. Burst Phase Adjustment (VC-81P Board) (Mothod Using Oscilloscope)

Subject	All black (cover lens with black cap)
Measurement Point	VIDEO output terminal
Measuring Instrument	Oscilloscope (Trigger slope:+)
Adjustment Address	11 (HUE CONT)
Specified Value	Burst phase should become a single line.

Adjusing method:

1) Set adjustment address to 11 with the adjustment remote controller.
2) Change the adjustment data so as to turn the burst waveform into a single line.
3) Change the adjustment address to store the adjustment data in the memory.
4) Perform Burst Level Adjustment.

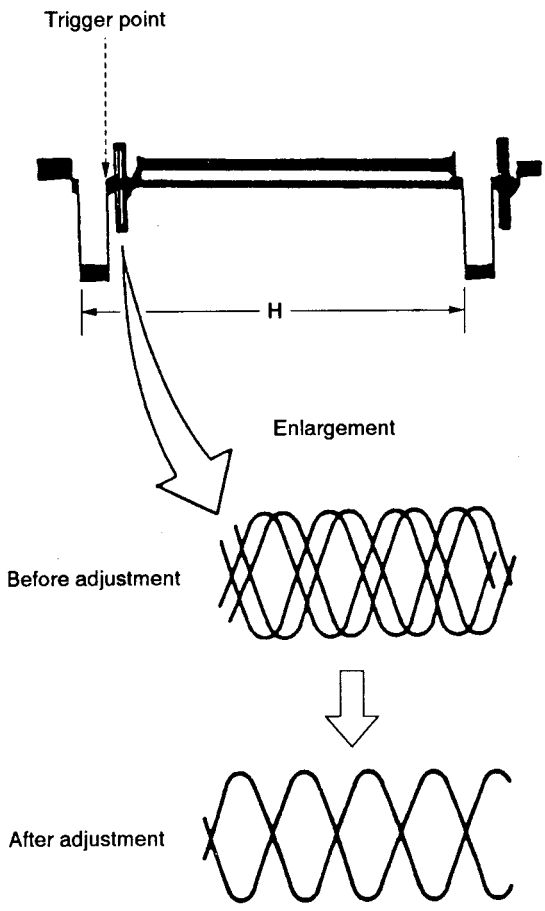

Fig. 7-28.

7-2-24. Burst Level Adjustment (VC-81P Board)

Subject	All black (cover lens with black cap)
Measurement Point	Pin (A10) (CAM C) of check point array
Measuring Instrument	Oscilloscope
Adjustment Address	10 (BURST LEVEL)
Specified Value	200 ± 5 mVp-p

Adjusting method:

1) Set the adjustment address to 10 with the adjustment remote controller.
2) Change the adjustment data with the adjustment remote controller to set the burst level to 200 ± 5 mVp-p.
3) Change the adjustment address to store the adjustment data in the memory.

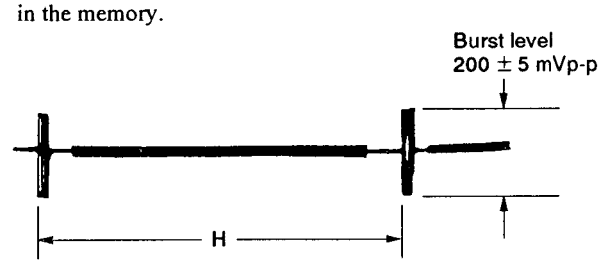

Fig. 7-29.

7-2-25. Indoor White Balance Adjustment (VC-81P Board) (Method Using Vectorscope)

Subject	Color bar chart standard picture frame
Measurement Point	Video output terminal
Measuring Instrument	Vectorscope
Adjustment Address	0B (R GAIN) 0C (B GAIN)
Specified Value	The center of the white luminance point is within a circle with a diameter of 1 mm centered around the origin.

Adjusting method:

1) Set the adjustment address to 0B with the adjustment remote controller.
2) Change the adjustment data with the adjustment remote controller to match the white luminance point with the origin.
3) Set the adjustment address to 0C.
4) Change the adjustment data to match the white luminance point with the origin.
5) Repeat steps 1) through 4).
6) Change the adjustment address to store the adjustment data in the memory.
   (The adjustment data should be 60 to FF)

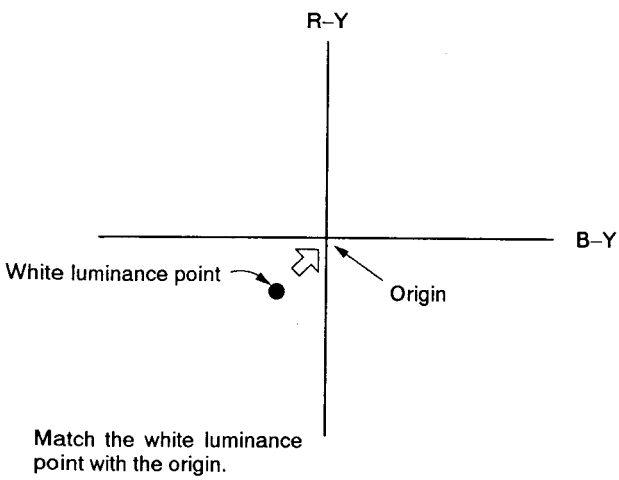

Fig. 7-30.

7-2-26. Indoor White Balance Adjustment (VC-81P Board) (Method Using Oscilloscope)

Subject	Color bar chart standard picture frame
Measurement Point	CH1 (X): emitter of Q257 (B–Y) CH2 (Y): emitter of Q255 (R–Y)
Measuring Instrument	Oscilloscope (X-Y mode)
Adjustment Address	0B (R GAIN) 0C (B GAIN)
Specified Value	Move the white luminance point to the black luminance point.

Adjusting method:

1) Set the adjustment address to 0B with the adjustment remote controller.
2) Change the adjustment data with the adjustment remote controller to match the white luminance point with the black luminance point.
3) Set the adjustment address to 0C.
4) Change the adjustment data to match the white luminance point with the black luminance point.
5) Repeat steps 1) through 4).
6) Change the adjustment address to store the adjustment data in the memory.
   (The adjustment data should be 60 to FF)

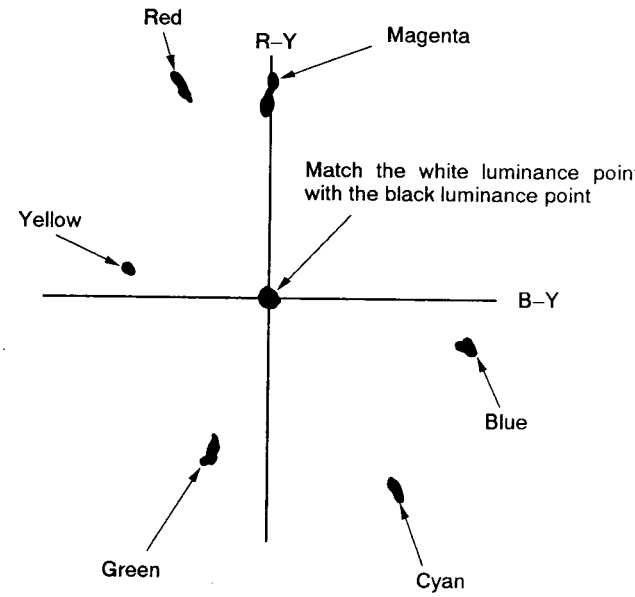

Fig. 7-31.

7-2-27. Color Reproduction Adjustment (VC-81P Board) (Method Using Vectorscope)

Subject	Color bar chart standard picture frame
Measurement Point	Video output terminal
Measuring Instrument	Vectorscope
Adjustment Address	05 (R–Y GAIN) 06 (B–Y GAIN) 07 (R–Y HUE) 08 (B–Y HUE)
Specified Value	All color luminance points are within color reproduction frame.

Note: Confirm that "Burst Level Adjustment" and "Indoor White Balance Adjustment" have been completed.

Adjusting method:

1) Adjust the phase and gain of the vectorscope to set the burst luminance points to the designated position on the color reproduction frame.
2) Change the adjustment data at the various adjustment addresses using the adjustment remote controller until all color luminance points are within the color reproduction frame.
   (The adjustment data should be 40 to FF)
3) Change the adjustment address to store the adjustment data in the memory.

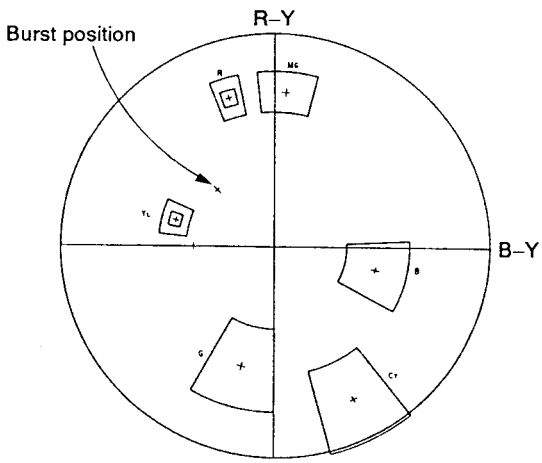

Fig. 7-32.

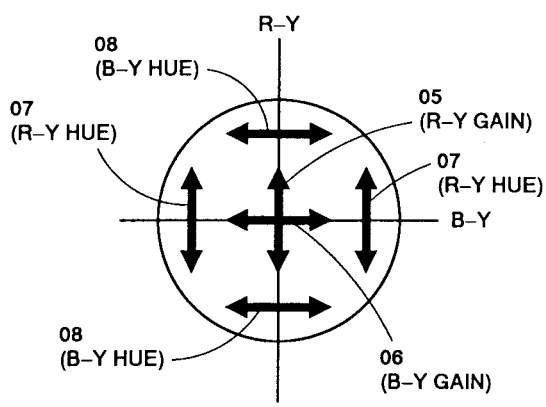

Fig. 7-33. Adjustment address and direction of luminance point movement

7-2-28. Color Reproduction Adjustment (Method Using Oscilloscope)

1. Gain adjustment (VC-81P board)

Subject	Color bar chart standard picture frame
Measurement Point	Pin (A10) (CAM C) of check point array
Measuring Instrument	Oscilloscope
Adjustment Address	05 (R–Y GAIN) 06 (B–Y GAIN)
Specified Value	Red level: 387 ± 22 mVp-p Yellow level: 255 ± 16 mVp-p

Note: Confirm that "Indoor White Balance Adjustment" is completed.

Adjusting method:

1) Set the adjustment address to 06 with the adjustment remote controller and set the adjustment data to B0.
2) Set the adjustment address to 07 and set the adjustment data to C0.
3) Set the adjustment address to 08 and set the adjustment data to C0.
4) Set the adjustment address to 05 and change the adjustment data to set the chroma signal "red" level to 387 ± 22 mVp-p.
5) Set the adjustment address to 06 and change the adjustment data to set the chroma signal "yellow" level to 255 ± 16 mVp-p.
   (The adjustment data should be 40 to FF)
6) Repeat steps 4) and 5).
7) Change the adjustment address to store the adjustment data in the memory.
8) Perform "Hue Adjustment".

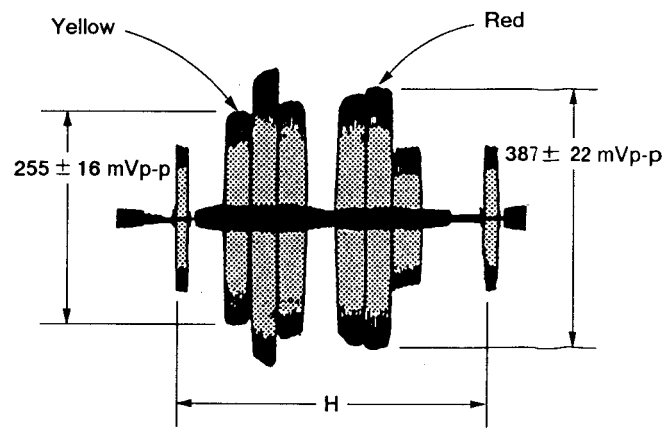

Fig. 7-34.

2. Hue adjustment (VC-81P board)

Subject	Color bar chart standard picture frame
Measurement Point	CH1 (X): emitter of Q257 (B–Y) CH2 (Y): emitter of Q255 (R–Y)
Measuring Instrument	Oscilloscope (X-Y mode)
Adjustment Address	07 (R–Y HUE) 08 (B–Y HUE)
Specified Value	Various color luminance points within color reproduction frame.

Note: Make sure that "Indoor White Balance Adjustment" is completed.

Adjusting method:

1) Match the "black" luminance point on the oscilloscope with the origin of the color reproduction frame.
2) Change the adjustment data at adjustment addresses 07 and 08 with the adjustment remote controller to bring the various color luminance points into the color reproduction frame.
3) Check the hue reproduced on the monitor TV and fine adjust the adjustment data at adjustment addresses 07 and 08 if necessary.
   (The adjustment data should be 40 to FF)
4) Set the oscilloscope to the normal mode and connect it to Pin (A10) of the check point array and confirm that the specified value of "1. Gain Adjustment" is satisfied. Change the data at the adjustment address 05 and 06 if the specified value is not met.
5) Change the adjustment address to store the adjustment data in the memory.

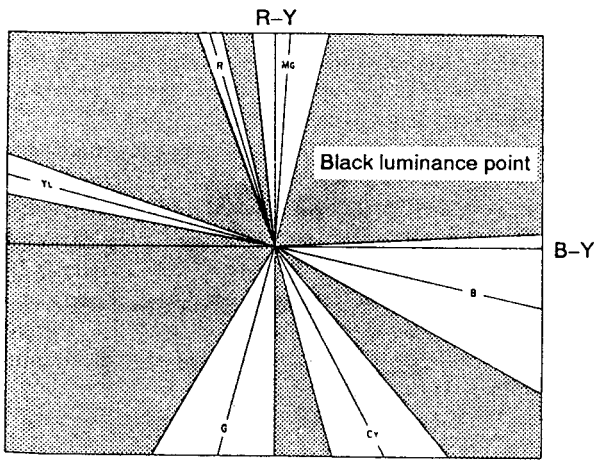

Fig. 7-35.

7-2-29. Auto White Balance Adjustment

Note: Be sure to first perform "Preset Adjustment" followed by "Auto White Balance Adjustment".

1. Preset adjustment (VC-81P board)

Subject	White pattern standard picture frame

Note: 1) Perform preset adjustment after supplying power to the unit for at least 30 seconds.
2) When performing preset adjustment again, once OFF/ON the power.

Preparations:

1) Prepare a 1 kΩ resistor for connecting Pin (B5) (AW ADJ) of the check point array and Pin ④ (CAM 5V) of W801.

Adjusting method:

1) Connect the Pin (B6) (CAM ADJ) of the check point array to the ground with a jumper wire after turning the power OFF and ON. Wait at least 30 seconds.
2) Select adjustment address 75 (AWB MODE) and set the adjustment data to E0.
3) Change the adjustment address to store the adjustment data in the memory.
4) Remove the jumper wire between Pin (B6) (CAM ADJ) of the check point array and the ground.
5) Connect Pin (B5) (AWB ADJ) of the check point array and Pin ④ of W801 (CAM 5V) with a 1 kΩ resistor.
6) Connect Pin (B6) (CAM ADJ) of the check point array to the ground using a jumper wire.
7) Confirm that the data indicated (address 01) on the adjustment remote controller is changed.
8) Remove the jumper wire connected to Pin (B6) (CAM ADJ) of the check point array after elapse of one second or more.
9) Remove the 1 kΩ resistor connected to Pin (B5) (AWB ADJ) of the check point array.
10) Connect Pin (B6) (CAM ADJ) of the check point array to the ground using a jumper wire.
11) Perform the following "Auto white balance adjustment".

2. Auto white balance adjustment (VC-81P board)

Note: Be sure to perform "Preset adjustment" before this adjustment.

Subject	White pattern standard picture frame
Filter	Filter C14 for color temperature correction
Measuring Instrument	Oscilloscope (X-Y Mode)[Note 1]
Measurement Point	CH1 (X): emitter of Q257 (B–Y) CH2 (Y): emitter of Q255 (R–Y)
Adjustment Address	01 (DELTA R) 5C (Ra) 02 (DELTA B) 5D (Rb) 3F (START R) 5E (Rc) 40 (START B) 5F (Ba) 44 (TOP SLP B) 60 (Bb) 4B (TOP UP) 61 (Bc) 4C (TOP DWN) 62 (R/B TOP) 54 (B UP LMT) 63 (R/B MDL) 55 (IN BTOP) 64 (R/B DWN) 56 (IN BMAX) 65 (B/R TOP) 57 (OUT BMIN) 66 (B/R MDL) 58 (OUT BDWN) 67 (B/R DWN) 5A (R OUTDOOR) 5B (B OUTDOOR)
Specified Value	Line up the white luminance point with the black luminance point.

Note: 1) Adjustment can be made in the same manner using a vectorscope.
Connect to VIDEO OUT terminal when the vectorscope is used.
2) All calculations in this section are made in decimal.

Adjusting method:

- Outdoor preset adjustment

1) Select the adjustment address 75 (AWB MODE) with the adjustment remote controller and set the adjustment data to 10.
2) Cover the lens with C14 filter.
3) Change the adjustment data at the adjustment addresses 01 and 02 alternately with the adjustment remote controller to match the white luminance point with the black luminance point. (Match the white luminance point with the origin when using the vectorscope.)
   The adjustment data of adjustment address 01 will be C1 and the adjustment data of adjustment address 02 will be C2.

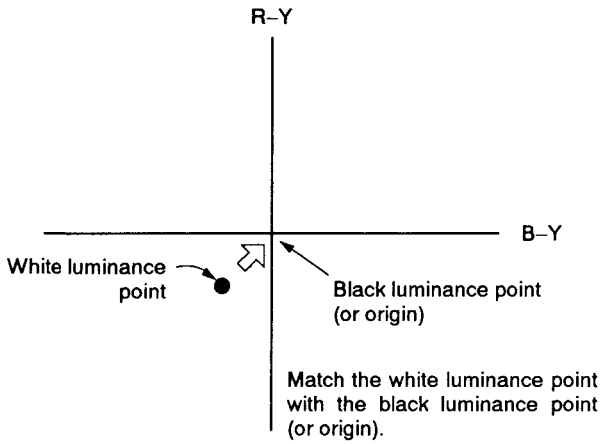

Fig. 7-36.

- Adjustment data input with the tables

4) When C2 value is from 3F through 55, obtain the adjustment data at the adjustment addresses 40, 54 to 58, 5B, 5F, 60 and 61 by Table 7-7., and enter the data into each address with the adjustment remote controller.
5) When C1 value is from 25 through 30, obtain the adjustment data at the adjustment addresses 3F, 5A, 5C, 5D and 5E with Table 7-8., and enter the data into each address with the adjustment remote controller.
6) When C1 value is from 25 through 30 and C2 value is from 3F through 55, obtain the adjustment data of the adjustment addresses 44, 4B, 4C and 62 to 67 with Table 7-9., and enter the data into each address with the adjustment remote controller.
7) When the data input to all adjustment addresses with the Tables has completed in 4) through 6), perform the adjustments after 15). If there is the adjustment address in which the data input is impossible, perform the following "Adjustment data input by calculation".

- Adjustment data input by calculation

8) Convert the adjustment data C1 to decimal to obtain $C1'$, and the adjustment data C2 to decimal to obtain $C2'$.
   (See Table 7-5. Hexadecimal — decimal conversion table)
9) Obtain R' and B' by the following formula.
   $R'=C1'+2$
   $B'=C2'+4$
10) Convert R' to hexadecimal and enter it into the adjustment address 5A.
11) Convert B' to hexadecimal and enter it into the adjustment address 5B.
12) Obtain X' and Y' by the following formula.
   $X'=64-R'$
   $Y'=B'-48$
13) Obtain the adjustment data (decimal) by the following formula, convert to hexadecimal and enter the data into each adjustment address. (When converting, if there is a fraction under decimal, round it off.) Still, take down each adjustment data (decimal).
   Address 54
   $D54'=Y'\times2+48$
   Address 55
   $D55'=B'$
   Address 56
   $D56'=Y'\times0.84+48$
   Address 57
   $D57'=D56'$
   Address 58
   $D58'=Y'\times0.3+48$
   Address 5C
   $D5C'=64-X'\times1.12$
   Address 5D
   $D5D'=R'$
   Address 5E
   $D5E'=64-X'\times0.593$
   Address 5F
   $D5F'=Y'\times1.34+48$
   Address 60
   $D60'=B'$
   Address 61
   $D61'=Y'\times0.467+48$

14) Obtain the adjustment data (decimal) by the following formula, convert to hexadecimal and enter the data into each adjustment address. (Round fractions off.)

Address 62

$D_{62}' = (D_{5D}' - D_{5C}') \times 64 / (D_{5F}' - D_{60}')$

Address 63

$D_{63}' = (D_{5E}' - D_{5D}') \times 64 / (D_{60}' - D_{61}')$

Address 64

$D_{64}' = (64 - D_{5E}') \times 64 / (D_{61}' - 48)$

Address 65

$D_{65}' = (D_{5F}' - D_{60}') \times 16 / (D_{5D}' - D_{5C}')$

Address 66

$D_{66}' = (D_{60}' - D_{61}') \times 16 / (D_{5E}' - D_{5D}')$

Address 67

$D_{67}' = (D_{61}' - 48) \times 16 / (64 - D_{5E}')$

Address 44

$D_{44}' = D_{62}' \times 1.8$

Address 4B

$D_{4B}' = D_{5C}' \times 2 + 16 + (D_{5F}' \times D44') / 64$

Address 4C

$D_{4C}' = D_{5C}' \times 2 - 14 + (D_{5F}' \times D44') / 64$

Address 3F

$D_{3F}' = D_{5E}'$

Address 40

$D_{40}' = D_{61}'$

- Auto white balance adjustment

15) Check the C14 filter is covered with the lens.

16) Select the adjustment address 75, and enter the adjustment data F0.

17) Change alternately the adjustment data at the adjustment addresses 01 and 02 with the adjustment remote controller to match the white luminance point with the black luminance point.
(Match the white luminance with the origin when using the vectorscope.)

18) Select the adjustment address 75, and enter the adjustment data 00.

19) Change the adjustment address to store the adjustment data in the memory.

(Example)

If C2 is 49, the Ⓐ line is the required adjustment data.

C2	Adjustment address									
	40	54	55	56	57	58	5B	5F	60	61
3F	39	56	43	40	40	36	43	49	43	39
40	39	58	44	41	41	36	44	4B	44	39
41	3A	5A	45	42	42	36	45	4C	45	3A
42	3A	5C	46	42	42	37	46	4D	46	3A
43	3B	5E	47	43	43	37	47	4F	47	3B
44	3B	60	48	44	44	37	48	50	48	3B
45	3C	62	49	45	45	38	49	52	49	3C
46	3C	64	4A	46	46	38	4A	53	4A	3C
47	3D	66	4B	47	47	38	4B	54	4B	3D
48	3D	68	4C	48	48	38	4C	56	4C	3D
49	3E	6A	4D	48	48	39	4D	57	4D	3E ←Ⓐ
4A	3E	6C	4E	49	49	39	4E	58	4E	3E
4B	3E	6E	4F	4A	4A	39	4F	5A	4F	3E
4C	3F	70	50	4B	4B	3A	50	5B	50	3F
4D	3F	72	51	4C	4C	3A	51	5C	51	3F
4E	40	74	52	4D	4D	3A	52	5E	52	40
4F	40	76	53	4D	4D	3B	53	5F	53	40
50	41	78	54	4E	4E	3B	54	60	54	41
51	41	7A	55	4F	4F	3B	55	62	55	41
52	42	7C	56	50	50	3B	56	63	56	42
53	42	7E	57	51	51	3C	57	64	57	42
54	43	80	58	52	52	3C	58	66	58	43
55	43	82	59	52	52	3C	59	67	59	43

Table 7-7.

C1	Adjustment address				
	3F	5A	5C	5D	5E
25	31	27	24	27	31
26	32	28	25	28	32
27	32	29	26	29	32
28	33	2A	27	2A	33
29	34	2B	28	2B	34
2A	34	2C	2A	2C	34
2B	35	2D	2B	2D	35
2C	35	2E	2C	2E	35
2D	36	2F	2D	2F	36
2E	37	30	2E	30	37
2F	37	31	2F	31	37
30	38	32	30	32	38

Table 7-8.

C1	C2	Adjustment address								
		44	4B	4C	62	63	64	65	66	67
25	3F	3A	9A	7C	20	40	6B	20	10	A
	40	31	92	74	1B	3A	6B	25	12	A
	41	31	93	75	1B	3A	60	25	12	B
	42	31	93	75	1B	35	60	25	13	B
	43	2B	8D	6F	18	35	57	2B	13	C
	44	2B	8E	70	18	31	57	2B	15	C
	45	26	89	6B	15	31	50	30	15	D
	46	26	8A	6C	15	2E	50	30	16	D
	47	26	8A	6C	15	2E	4A	30	16	E
	48	23	86	68	13	2B	4A	35	18	E
	49	23	87	69	13	2B	45	35	18	F
	4A	23	87	69	13	28	45	35	1A	F
	4B	1F	84	66	11	26	45	3B	1B	F
	4C	1F	85	67	11	26	40	3B	1B	10
	4D	1F	85	67	11	24	40	3B	1D	10
	4E	1D	82	64	10	24	3C	40	1D	11
	4F	1D	83	65	10	22	3C	40	1E	11
	50	1D	83	65	10	22	38	40	1E	12
	51	1B	81	63	F	20	38	45	20	12
	52	1B	81	63	F	20	35	45	20	13
	53	1B	81	63	F	1E	35	45	22	13
	54	19	7F	61	E	1E	33	4B	22	14
	55	19	80	62	E	1D	33	4B	23	14
26	3F	3A	9C	7E	20	40	64	20	10	A
	40	31	94	76	1B	3A	64	25	12	A
	41	31	95	77	1B	3A	5A	25	12	B
	42	31	95	77	1B	35	5A	25	13	B
	43	2B	8F	71	18	35	51	2B	13	D
	44	2B	90	72	18	31	51	2B	15	D
	45	26	8B	6D	15	31	4B	30	15	E
	46	26	8C	6E	15	2E	4B	30	16	E
	47	26	8C	6E	15	2E	45	30	16	F
	48	23	88	6A	13	2B	45	35	18	F
	49	23	89	6B	13	2B	40	35	18	10
	4A	23	89	6B	13	28	40	35	1A	10
	4B	1F	86	68	11	26	40	3B	1B	10
	4C	1F	87	69	11	26	3C	3B	1B	11
	4D	1F	87	69	11	24	3C	3B	1D	11
	4E	1D	84	66	10	24	38	40	1D	12
	4F	1D	85	67	10	22	38	40	1E	12
	50	1D	85	67	10	22	35	40	1E	13
	51	1B	83	65	F	20	35	45	20	13
	52	1B	83	65	F	20	32	45	20	15
	53	1B	83	65	F	1E	32	45	22	15
	54	19	81	63	E	1E	2F	4B	22	16
	55	19	82	64	E	1D	2F	4B	23	16
27	3F	3A	9E	80	20	3A	64	20	12	A
	40	31	96	78	1B	34	64	25	14	A
	41	31	97	79	1B	34	5A	25	14	B
	42	31	97	79	1B	30	5A	25	15	B
	43	2B	91	73	18	30	51	2B	15	D
	44	2B	92	74	18	2C	51	2B	17	D
	45	26	8D	6F	15	2C	4B	30	17	E
	46	26	8E	70	15	29	4B	30	19	E
	47	26	8E	70	15	29	45	30	19	F
	48	23	8A	6C	13	26	45	35	1B	F
	49	23	8B	6D	13	26	40	35	1B	10
	4A	23	8B	6D	13	24	40	35	1C	10
	4B	1F	88	6A	11	22	40	3B	1E	10
	4C	1F	89	6B	11	22	3C	3B	1E	11
	4D	1F	89	6B	11	20	3C	3B	20	11
	4E	1D	86	68	10	20	38	40	20	12
	4F	1D	87	69	10	1E	38	40	22	12
	50	1D	87	69	10	1E	35	40	22	13
	51	1B	85	67	F	1D	35	45	24	13
	52	1B	85	67	F	1D	32	45	24	15
	53	1B	85	67	F	1B	32	45	25	15
	54	19	83	65	E	1B	2F	4B	25	16
	55	19	84	66	E	1A	2F	4B	27	16

C1	C2	Adjustment address								
		44	4B	4C	62	63	64	65	66	67
28	3F	3A	A0	82	20	3A	5C	20	12	B
	40	31	98	7A	1B	34	5C	25	14	B
	41	31	99	7B	1B	34	53	25	14	C
	42	31	99	7B	1B	30	53	25	15	C
	43	2B	93	75	18	30	4C	2B	15	E
	44	2B	94	76	18	2C	4C	2B	17	E
	45	26	8F	71	15	2C	45	30	17	F
	46	26	90	72	15	29	45	30	19	F
	47	26	90	72	15	29	40	30	19	10
	48	23	8C	6E	13	26	40	35	1B	10
	49	23	8D	6F	13	26	3B	35	1B	11
	4A	23	8D	6F	13	24	3B	35	1C	11
	4B	1F	8A	6C	11	22	3B	3B	1E	11
	4C	1F	8B	6D	11	22	37	3B	1E	12
	4D	1F	8B	6D	11	20	37	3B	20	12
	4E	1D	88	6A	10	20	34	40	20	14
	4F	1D	89	6B	10	1E	34	40	22	14
	50	1D	89	6B	10	1E	31	40	22	15
	51	1B	87	69	F	1D	31	45	24	15
	52	1B	87	69	F	1D	2E	45	24	16
	53	1B	87	69	F	1B	2E	45	25	16
	54	19	85	67	E	1B	2C	4B	25	17
	55	19	86	68	E	1A	2C	4B	27	17
29	3F	3A	A2	84	20	3A	55	20	12	C
	40	31	9A	7C	1B	34	55	25	14	C
	41	31	9B	7D	1B	34	4D	25	14	D
	42	31	9B	7D	1B	30	4D	25	15	D
	43	2B	95	77	18	30	46	2B	15	F
	44	2B	96	78	18	2C	46	2B	17	F
	45	26	91	73	15	2C	40	30	17	10
	46	26	92	74	15	29	40	30	19	10
	47	26	92	74	15	29	3B	30	19	11
	48	23	3E	70	13	26	3B	35	1B	11
	49	23	8F	71	13	26	37	35	1B	13
	4A	23	8F	71	13	24	37	35	1C	13
	4B	1F	8C	6E	11	22	37	3B	1E	13
	4C	1F	8D	6F	11	22	33	3B	1E	14
	4D	1F	8D	6F	11	20	33	3B	20	14
	4E	1D	8A	6C	10	20	30	40	20	15
	4F	1D	8B	6D	10	1E	30	40	22	15
	50	1D	8B	6D	10	1E	2D	40	22	17
	51	1B	89	6B	F	1D	2D	45	24	17
	52	1B	89	6B	F	1D	2B	45	24	18
	53	1B	89	6B	F	1B	2B	45	25	18
	54	19	87	69	E	1B	28	4B	25	19
	55	19	88	6A	E	1A	28	4B	27	19
2A	3F	26	90	72	15	33	55	30	14	C
	40	21	8B	6D	12	2F	55	38	16	C
	41	21	8B	6D	12	2F	4D	38	16	D
	42	21	8C	6E	12	2B	4D	38	18	D
	43	1D	87	69	10	2B	46	40	18	F
	44	1D	88	6A	10	27	46	40	1A	F
	45	1A	85	67	E	27	40	48	1A	10
	46	1A	85	67	E	25	40	48	1C	10
	47	1A	86	68	E	25	3B	48	1C	11
	48	17	83	65	D	22	3B	50	1E	11
	49	17	83	65	D	22	37	50	1E	13
	4A	17	84	66	D	20	37	50	20	13
	4B	15	81	63	C	1E	37	58	22	13
	4C	15	82	64	C	1E	33	58	22	14
	4D	15	82	64	C	1C	33	58	24	14
	4E	13	80	62	B	1C	30	60	24	15
	4F	13	80	62	B	1B	30	60	26	15
	50	13	81	63	B	1B	2D	60	26	17
	51	12	7F	61	A	1A	2D	68	28	17
	52	12	7F	61	A	1A	2B	68	28	18
	53	12	80	62	A	18	2B	68	2A	18
	54	10	7E	60	9	18	28	70	2A	19
	55	10	7E	60	9	17	28	70	2C	19

C1	C2	Adjustment address								
		44	4B	4C	62	63	64	65	66	67
2B	3F	26	92	74	15	33	4E	30	14	D
	40	21	8D	6F	12	2F	4E	38	16	D
	41	21	8D	6F	12	2F	46	38	16	F
	42	21	8E	70	12	2B	46	38	18	F
	43	1D	89	6B	10	2B	40	40	18	10
	44	1D	8A	6C	10	27	40	40	1A	10
	45	1A	87	69	E	27	3B	48	1A	11
	46	1A	87	69	E	25	3B	48	1C	11
	47	1A	88	6A	E	25	36	48	1C	13
	48	17	85	67	D	22	36	50	1E	13
	49	17	85	67	D	22	32	50	1E	14
	4A	17	86	68	D	20	32	50	20	14
	4B	15	83	65	C	1E	32	58	22	14
	4C	15	84	66	C	1E	2F	58	22	16
	4D	15	84	66	C	1C	2F	58	24	16
	4E	13	82	64	B	1C	2C	60	24	17
	4F	13	83	64	B	1B	2C	60	26	17
	50	13	83	65	B	1B	29	60	26	19
	51	12	81	63	A	1A	29	68	28	19
	52	12	81	63	A	1A	27	68	28	1A
	53	12	82	64	A	18	27	68	2A	1A
	54	10	80	62	9	18	25	70	2A	1C
	55	10	80	62	9	17	25	70	2C	1C
2C	3F	26	94	76	15	2D	4E	30	17	D
	40	21	8F	71	12	29	4E	38	19	D
	41	21	8F	71	12	29	46	38	19	F
	42	21	90	72	12	25	46	38	1B	F
	43	1D	8B	6D	10	25	40	40	1B	10
	44	1D	8C	6E	10	22	40	40	1E	10
	45	1A	89	6B	E	22	3B	48	1E	11
	46	1A	89	6B	E	20	3B	48	20	11
	47	1A	8A	6C	E	20	36	48	20	13
	48	17	87	69	D	1E	36	50	22	13
	49	17	87	69	D	1E	32	50	22	14
	4A	17	88	6A	D	1C	32	50	25	14
	4B	15	85	67	C	1A	32	58	27	14
	4C	15	86	68	C	1A	2F	58	27	16
	4D	15	86	68	C	19	2F	58	29	16
	4E	13	84	66	B	19	2C	60	29	17
	4F	13	84	66	B	18	2C	60	2B	17
	50	13	85	67	B	18	29	60	2B	19
	51	12	83	65	A	16	29	68	2E	19
	52	12	83	65	A	16	27	68	2E	1A
	53	12	84	66	A	15	27	68	30	1A
	54	10	82	64	9	15	25	70	30	1C
	55	10	82	64	9	14	25	70	32	1C
2D	3F	26	96	78	15	2D	47	30	17	E
	40	21	91	73	12	29	47	38	19	E
	41	21	91	73	12	29	40	38	19	10
	42	21	92	74	12	25	40	38	1B	10
	43	1D	8D	6F	10	25	3A	40	1B	12
	44	1D	8E	70	10	22	3A	40	1E	12
	45	1A	8B	6D	E	22	35	48	1E	13
	46	1A	8B	6D	E	20	35	48	20	13
	47	1A	8C	6E	E	20	31	48	20	15
	48	17	89	6B	D	1E	31	50	22	15
	49	17	89	6B	D	1E	2E	50	22	16
	4A	17	8A	6C	D	1C	2E	50	25	16
	4B	15	87	69	C	1A	2E	58	27	16
	4C	15	88	6A	C	1A	2B	58	27	18
	4D	15	88	6A	C	19	2B	58	29	18
	4E	13	86	68	B	19	28	60	29	1A
	4F	13	86	68	B	18	28	60	2B	1A
	50	13	87	69	B	18	26	60	2B	1B
	51	12	85	67	A	16	26	68	2E	1B
	52	12	85	67	A	16	24	68	2E	1D
	53	12	86	68	A	15	24	68	30	1D
	54	10	84	66	9	15	22	70	30	1E
	55	10	84	66	9	14	22	70	32	1E

Table 7-9. (1)

C1	C2	Adjustment address								
		44	4B	4C	62	63	64	65	66	67
2E	3F	26	98	7A	15	2D	40	30	17	10
	40	21	93	75	12	29	40	38	19	10
	41	21	93	75	12	29	3A	38	19	12
	42	21	94	76	12	25	3A	38	1B	12
	43	1D	8F	71	10	25	34	40	1B	14
	44	1D	90	72	10	22	34	40	1E	14
	45	1A	8D	6F	E	22	30	48	1E	15
	46	1A	8D	6F	E	20	30	48	20	15
	47	1A	8E	70	E	20	2C	48	20	17
	48	17	8B	6D	D	1E	2C	50	22	17
	49	17	8B	6D	D	1E	29	50	22	19
	4A	17	8C	6E	D	1C	29	50	25	19
	4B	15	89	6B	C	1A	29	58	27	19
	4C	15	8A	6C	C	1A	26	58	27	1B
	4D	15	8A	6C	C	19	26	58	29	1B
	4E	13	88	6A	B	19	24	60	29	1C
	4F	13	88	6A	B	18	24	60	2B	1C
	50	13	89	6B	B	18	22	60	2B	1E
	51	12	87	69	A	16	22	68	2E	1E
	52	12	87	69	A	16	20	68	2E	20
	53	12	88	6A	A	15	20	68	30	20
	54	10	86	68	9	15	1E	70	30	22
	55	10	86	68	9	14	1E	70	32	22
2F	3F	26	9A	7C	15	26	40	30	1B	10
	40	21	95	77	12	23	40	38	1D	10
	41	21	95	77	12	23	3A	38	1D	12
	42	21	96	78	12	20	3A	38	20	12
	43	1D	91	73	10	20	34	40	20	14
	44	1D	92	74	10	1E	34	40	23	14
	45	1A	8F	71	E	1E	30	48	23	15
	46	1A	8F	71	E	1B	30	48	25	15
	47	1A	90	72	E	1B	2C	48	25	17
	48	17	8D	6F	D	1A	2C	50	28	17
	49	17	8D	6F	D	1A	29	50	28	19
	4A	17	8E	70	D	18	29	50	2B	19
	4B	15	8B	6D	C	17	29	58	2D	19
	4C	15	8C	6E	C	17	26	58	2D	1B
	4D	15	8C	6E	C	15	26	58	30	1B
	4E	13	8A	6C	B	15	24	60	30	1C
	4F	13	8A	6C	B	14	24	60	33	1C
	50	13	8B	6D	B	14	22	60	33	1E
	51	12	89	6B	A	13	22	68	35	1E
	52	12	89	6B	A	13	20	68	35	20
	53	12	8A	6C	A	12	20	68	38	20
	54	10	88	6A	9	12	1E	70	38	22
	55	10	88	6A	9	11	1E	70	3B	22
30	3F	26	9C	7E	15	26	39	30	1B	12
	40	21	97	79	12	23	39	38	1D	12
	41	21	97	79	12	23	33	38	1D	14
	42	21	98	7A	12	20	33	38	20	14
	43	1D	93	75	10	20	2F	40	20	16
	44	1D	94	76	10	1E	2F	40	23	16
	45	1A	91	73	E	1E	2B	48	23	18
	46	1A	91	73	E	1B	2B	48	25	18
	47	1A	92	74	E	1B	27	48	25	1A
	48	17	8F	71	D	1A	27	50	28	1A
	49	17	8F	71	D	1A	25	50	28	1C
	4A	17	90	72	D	18	25	50	2B	1C
	4B	15	8D	6F	C	17	25	58	2D	1C
	4C	15	8E	70	C	17	22	58	2D	1E
	4D	15	8E	70	C	15	22	58	30	1E
	4E	13	8C	6E	B	15	20	60	30	20
	4F	13	8C	6E	B	14	20	60	33	20
	50	13	8D	6F	B	14	1E	60	33	22
	51	12	8B	6D	A	13	1E	68	35	22
	52	12	8B	6D	A	13	1C	68	35	24
	53	12	8C	6E	A	12	1C	68	38	24
	54	10	8A	6C	9	12	1B	70	38	26
	55	10	8A	6C	9	11	1B	70	3B	26

Table 7-9. (2)

7-2-30. Outdoor White Balance Check (VC-81P Board)

Subject	White pattern standard picture frame
Filter	Filter C14 for color temperature correction
Measurement Point	When vectorscope used: video output terminal When oscilloscope used: CH1 (X): emitter of Q257 (B–Y) CH2 (Y): emitter of Q255 (R–Y)
Measuring Instrument	
Specified Value	See Fig. 7-37.

Connections:

1) Remove the jumper wire connected to Pin (B6) (CAM ADJ) of the check point array.
   (Set the EVR adjustment mode to OFF.)

Checking method:

1) Cover the lens with the C14 filter for color temperature correction.
2) Press the white balance button to select the outdoor white balance mode. (☀ mark is displayed on EVF screen.)
3) Confirm that the center of the white luminance point is within the standard circle.

   Note: When using a vectorscope, adjust the gain and phase of the vectorscope so that burst luminance point moves to the burst position of the color reproduction frame.

[When using vectorscope]

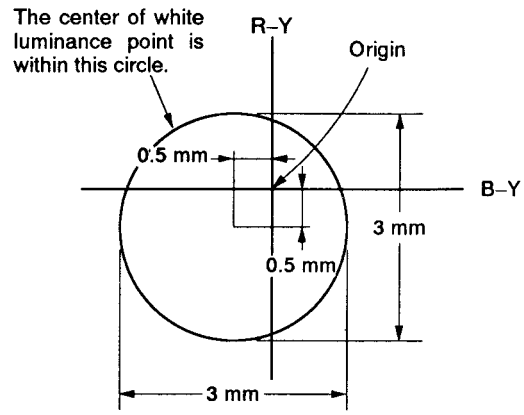

[When using oscilloscope]

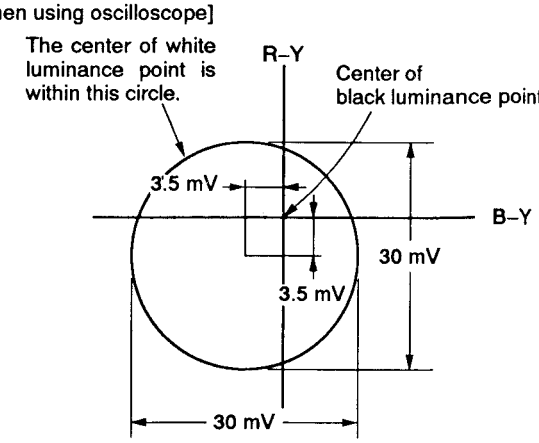

Fig. 7-37.

7-2-31. Auto White Balance Check (VC-81P Board)

Subject	White pattern standard picture frame
Filter	Filter C14 for color temperature correction
Measurement Point	When vectorscope used: video output terminal When oscilloscope used: CH1 (X): emitter of Q257 (B–Y) CH2 (Y): emitter of Q255 (R–Y)
Measuring Instrument	
Specified Value	See Fig. 7-38.

Checking method:

1) Select adjustment address 75 with the adjustment remote controller and enter adjustment data of F0. (Auto white balance tracking zone invalidity/all area discrimination mode setting)
2) Change the adjustment address to store the adjustment data in the memory.
3) Remove the jumper wire between Pin (B6) of the check point array and the ground.
   (Set the EVR adjustment mode to OFF.)
4) Set the white balance to the auto white balance mode.
5) Confirm that the white luminance point matches with the origin (or the black luminance point) when shooting the white pattern without the C14 filter.
6) Cover the lens with the C14 filter and confirm that the white luminance point matches with the origin (or the black luminance point) in about 2 seconds.
7) Connect Pin (B6) of the check point array to the ground with the jumper wire.
   (Set the EVR adjustment mode to ON.)
8) Select the adjustment address 75 with the adjustment remote controller and the adjustment data of 00.
   (Release auto white balance check mode)
9) Change the adjustment address to store the adjustment data in the memory.

[When using vectorscope]

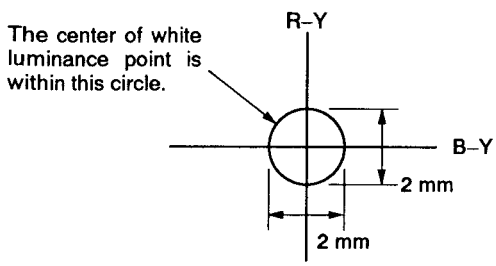

[When using oscilloscope]

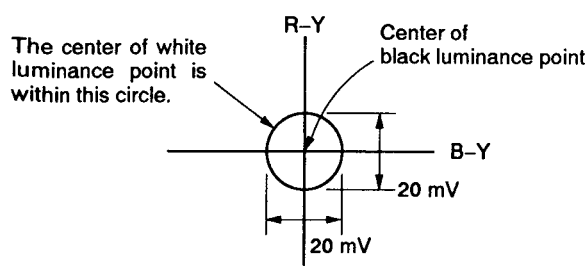

Fig. 7-38.

7-2-32. Focus Motor Speed Adjustment (VC-81P Board)

Subject	Arbitrary
Measurement Point	CN304
Measuring Instrument	AF microprocessor data reading jig
Adjustment Address	24 (FOCUS SPEED)
Specified Value	Average value of data indicated on jig=6.0 ± 0.5

Remarks: The rotation time from the close extreme to far extreme of the focus ring should be approximately 2.5 seconds after completion of adjustment.

Adjusting method:

1) Set the auto focus to ON.
2) Select adjustment address 25 with the adjustment remote controller and enter adjustment data of 01.
   (Sets hunching mode)
3) Set the adjustment address to 24.
4) Change the adjustment data so that the indication on the AF microprocessor data reading jig is 06 while the ring is rotating.
5) Press the HOLD button of the AF microprocessor data reading jig while the focus ring is rotating to read the indication value.
6) Repeat step 5) ten times and obtain the average value.
   Specified value=6.0 ± 0.5
   Repeat steps 4) and 5) if the specified value is not satisfied.
7) Set the adjustment address to 25 and set the adjustment data to 00. (Releases hunching mode)
8) Change the adjustment address to store the adjustment data in the memory.

7-2-33. Macro Area Adjustment (VC-81P Board)

Subject	Arbitrary
Measurement Point	CN304
Measuring Instrument	AF microprocessor data reading jig
Adjustment Address	27 (MACRO)
Specified Value	(Value at zoom ring WIDE position) −1

Adjusting method:

1) Press the WIDE side of the zoom button and set the zoom ring to the WIDE position (7 mm).
2) Select adjustment address 25 with the adjustment remote controller and set the adjustment data to 03. (Sets zoom position indication mode)
3) Read the data indicated on the AF microprocessor data reading jig. (Data in the range of 06 to 0E is displayed if normal.)
4) Change the adjustment address to 27.
5) Subtract 1 from the data read from the jig and enter as the adjustment data. (See Table 7-5. Hexadecimal — decimal conversion table)
6) Change the adjustment address to 25 and set the adjustment data to 00. (Releases zoom position indication mode)
7) Change the adjustment address to store the adjustment data in the memory.

7-2-34. Auto Focus Adjustment (VC-81P Board)

1. Adjustment in all black pattern

Subject	All black (cover lens with black cap)
Measurement Point	CN304
Measuring Instrument	AF microprocessor data reading jig
Adjustment Address	33 (FHB), 35 (AGC B)

Adjusting method:

1) Set the auto focus to OFF with the focus button.
2) Select adjustment address 25 with the adjustment remote controller and set the adjustment data to FF.
   (Set the auto focus filter to FH)
3) Read the data indicated on the AF microprocessor data reading jig (FH B) and enter adjustment address 33. (FH B will be 00 to 04.)
4) Select adjustment address 25 and set the adjustment data to FD. (Set the auto focus filter to FA position.)
5) Confirm the data indicated the AF microprocessor data reading jig (FA B) is 00 to 0B.
6) Select adjustment address 25 and set the adjustment data to 0B. (Auto focus AGC adjustment mode)
7) Read the data indicated on the AF microprocessor data reading jig (AGC B) and enter adjustment address 35.
8) Perform "Adjustment in all white pattern".

2. Adjustment in all white pattern

Subject	All white pattern[Note]
Measurement Point	CN304
Measuring Instrument	AF microprocessor data reading jig
Adjustment Address	32 (FHW), 34 (AGC W)

Note: Place the pattern box without chart in the front of the camera. Set the zoom lever to TELE position and shoots the pattern box.

Adjusting method:

1) Select adjustment address 25 with the adjustment remote controller and enter adjustment data of FF.
2) Read the data (FH W) indicated on the AF microprocessor data reading jig and enter adjustment address 32. (FH W should be 00 or 01.)
3) Select adjustment address 25 and set the adjustment data to FD.
4) Confirm that the data (FA W) indicated on the AF microprocessor data reading jig is 00 to 03.
5) Select adjustment address 25 and set the adjustment data to 0B.
6) Read the data (AGC W) indicated on the AF microprocessor data reading jig and enter adjustment address 34.
7) Select adjustment address 25 and enter adjustment data of 00.
8) Change the adjustment address to store the adjustment data in the memory.

7-2-35. Auto Focus Check

Note: Perform adjustment with the EVF (electronic viewfinder) attached.

Subject	Siemens star (position 1.5 m from the front of the lens reference plane (CCD imager))

Measuring method:

1) Place the Siemens star 1.5 m from the front of the lens reference plane (See Fig. 7-2.).
2) Set the zoom lever to the TELE position (56 mm) and set the auto focus to ON with FOCUS button.
3) Adjust the position of the camera so that center of the Siemens star is lined up with the center of the monitor screen on the monitor TV screen.
4) To open the iris, decrease the illumination of the Siemens star chart to the range in which the normal image without the noise can be obtained.
   (Or cover lens with the ND filter.)
5) Set the auto-focus to OFF with FOCUS button.
6) Manually rotate the focus ring to set the focus. Confirm that the focus mark is inside the range shown in Fig. 7-39. at this time.
   Perform "Flange Back Adjustment" if the specification is not satisfied.
7) Turn the focus ring to the close extreme (1.2 m).
8) Set the auto-focus to ON with FOCUS button.
9) Confirm that there is focusing within two seconds and a sharp image can be obtained.
10) Set the auto-focus to OFF and turn the focus ring to the far extreme (∞).
11) Set the auto-focus to ON.
12) Confirm that there is focusing within three seconds and a sharp image can be obtained.

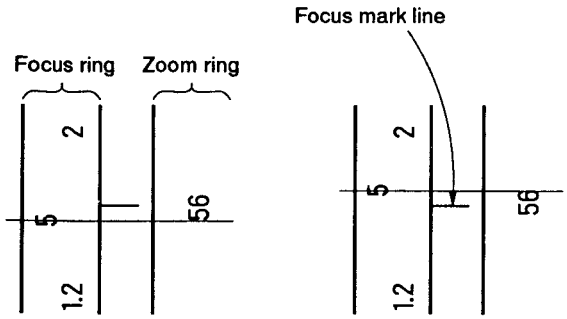

Specified value: The center of the character "5" of the focus ring is within the character "56" of the zoom ring.

Fig. 7-39.

7-2-36. Fader Level Adjustment

Subject	Arbitrary
Measurement Point	Pin (A8) (CAM Y) of check point array
Measuring Instrument	Oscilloscope
Adjusting Element	0F (FADER LEVEL)
Specified Value	20 ± 5 mV

Adjusting method:

1) Set adjustment data FF to adjustment address 03 (FADER) with the adjustment remote controller.
2) Change the adjustment address to 0F.
3) Change the adjustment data and set the FADER Y signal level to 20 ± 5 mV.
4) Change the adjustment address to 03 and set the adjustment data to 00.
5) Change the adjustment address to store the adjustment data in the memory.

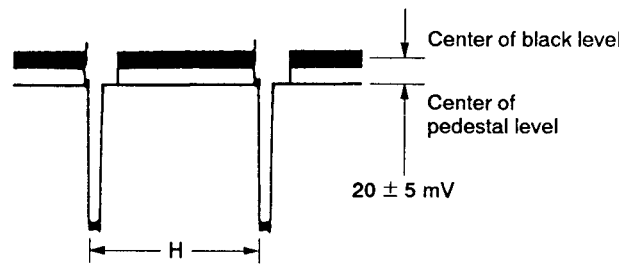

Fig. 7-40.

7-2-37. Power Zoom Speed Check

Subject	Arbitrary
Measuring Instrument	Stop watch
Adjustment Address	22 (ZOOM L SPD) 23 (ZOOM H SPD)
Specified Value	8.0 ± 2.0 sec.

Note: 1) In the adjustment mode, the zoom button of the remote commander does not function.

Checking method:

1) Confirm that the adjustment data of adjustment address 22 and 23 is 44.
2) Set the zoomring to the TELE-end position.
3) Press the WIDE side of the zoom button and measure how long it takes to rotate from TELE-end to WIDE-end.
4) Set the zoomring to the WIDE-end position.
5) Press the TELE side of the zoom button and measure how long it takes to rotate from WIDE-end to TELE-end.
6) If the specified value is not obtained in the step 2) or 3), change the adjustment address 22 and 23 with the adjustment remote controller and repeat steps 1) through 4). (Input the same value for adjustment address 22 and 23.)

Note: If the adjustment data is too small, the zoom motor will not rotate.

Adjustment data	Zoom speed
Large	Fast
↕	↕
Small	Slow

Table 7-10.

7-3. CAMERA REC SYSTEM ADJUSTMENTS

7-3-1. VCO Adjustment (VC-81P Board)

Subject	Arbitrary
Measurement Point	Pin ⑦ of IC141
Measuring Instrument	Digital voltmeter
Adjusting Element	CT141
Specified Value	2.8 ± 0.2 Vdc

Adjusting method:

1) Set to 2.8 ± 0.2 Vdc with CT141.

7-3-2. Chroma Input Level Adjustment (VC-81P Board)

Subject	All black (cover lens with black cap)
Measurement Point	Pin ① of IC503
Measuring Instrument	Oscilloscope
Adjusting Element	RV501
Specified Value	420 ± 20 mVp-p

Adjusting method:

1) Adjust the burst signal level to 420 ± 20 mVp-p using RV501.

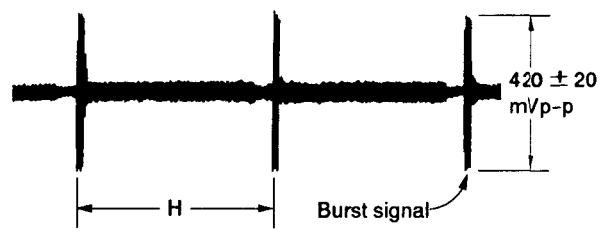

Fig. 7-41. Chroma input level adjustment

7-3-3. Recording Chroma RF Level Adjustment (VC-81P Board)

Subject	All black (cover lens with black cap)
Mode	Camera recording
Measurement Point	TP212 (emitter of Q241) on VS-69 board check land
Measuring Instrument	Oscilloscope
Adjusting Element	RV504
Specified Value	220 ± 10 mVp-p

Adjusting method:

1) Adjust the burst signal level to 220 ± 10 mVp-p using RV504.

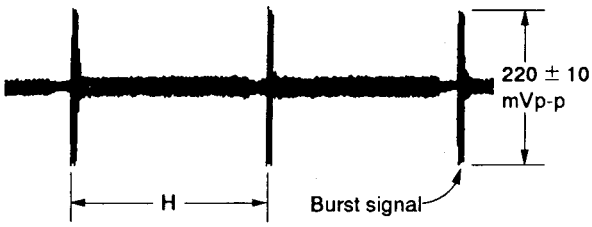

Fig. 7-42. Recording chroma RF level adjustment

7-3-4. Y FM Carrier Frequency Adjustment (VC-81P Board)

Subject	Arbitary
Mode	Camera recording
Measurement Point	TP161 (emitter of Q237) on VS-69 board check land
Measuring Instrument	Frequency counter
Adjusting Element	RV502
Specified Value	4.29 ± 0.04 MHz

Connections:

1) Connect the Pin (A8) (CAM Y) of the check point array to Pin ④ (CAM 5V) of W801 with a jumper wire.

Adjusting method:

1) Adjust to 4.29 ± 0.04 MHz with RV502.
2) Be sure to perform deviation adjustment.

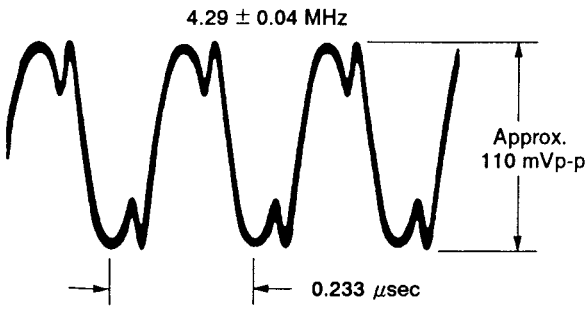

Fig. 7-43. Y FM carrier frequency adjustment

7-3-5. Y FM Deviation Adjustment (VC-81P Board)

Subject	All black (cover lens with black cap)
Mode	Camera recording and playback
Signal	All black signal recorded with the camera. Alignment tape for checking operation (WR5-5CSP) Color bar section
Measurement Point	Video output terminal
Measuring Instrument	Oscilloscope
Adjusting Element	RV503
Specified Value	(Horizontal sync signal level of alignment tape) ± 0.015V

Note: 1) Confirm that "PB Y Level 1 Adjustment", "PB Y Level 2 Adjustment" and "Y FM Carrier Frequency Adjustment" of the video block adjustment should be completed.

2) Terminate the video output terminal (J901) at 75Ω .

Adjusting method:

1) Play the color bar section of the alignment tape (WR5-5CSP) and make a note of the horizontal sync signal level (approx. 0.3V) at this time.
2) Record the all black subject with the camera.
3) Play back the tape recorded in step 2).
4) Confirm that the horizontal sync signal level at this time is the same as the level noted in step 1).
   Specified value:
   (Horizontal sync signal level of alignment tape) ± 0.015V
5) If the specified value is not satisfied, repeat 2) to 4) after turning RV503 in the following manner.

	Rotation direction of RV503
When smaller than specified value	Counterclockwise (↺)
When larger than specified value	Clockwise (↻)

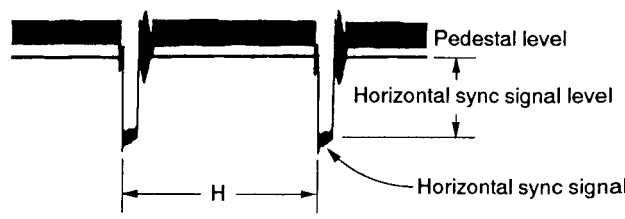

Fig. 7-44. Y FM deviation adjustment

7-3-6. REC Y Level Adjustment (VC-81P Board)

Subject	All black (cover lens with black cap)
Mode	Camera recording
Measurement Point	TP161 (emitter of Q237) on VS-69 board check land
Measuring Instrument	Oscilloscope
Adjusting Element	RV505
Specified Value	135 ± 5 mVp-p

Adjusting method:

1) Adjust RV505 to 135 ± 5 mVp-p.

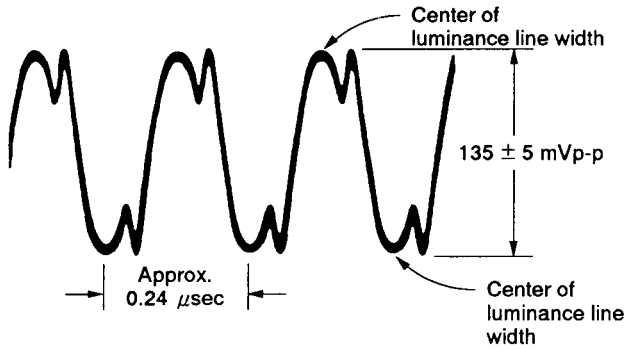

Fig. 7-45. REC Y level adjustment

7-4. DIGITAL TITLER SYSTEM ADJUSTMENTS

7-4-1. Titler PLL Adjustment (TI-32P Board)

Subject	Arbitrary
Measurement Point	Connectiong point of RB801 and C808 (TP804)
Measuring Instrument	Digital voltmeter
Adjusting Element	CT801
Specified Value	2.42 ± 0.1 Vdc

Connection:

1) Connect TP801 (PLL ADJ: Pin ⑭ of IC803) of the check land and TP803 (VDD) with a jumper wire.

Adjusting method:

1) Adjust CT801 to 2.42 ± 0.1 Vdc.

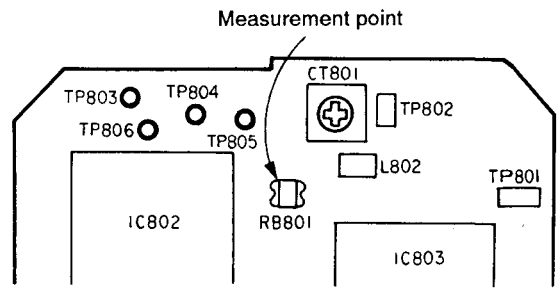

Fig. 7-46.

7-4-2. Character Generator fo Adjustment (TI-32P Board)

Subject	Arbitrary
Measurement Point	Pin ⑦ of IC802
Measuring Instrument	Frequency counter
Adjusting Element	CT802
Specified Value	6.38 ± 0.05 MHz

Connection:

1) Connect Pin ⑳ of IC802 (TP805) and TP803 (VDD) with a jumper wire.

Adjusting method:

1) Adjust CT802 to 6.38 ± 0.05 MHz.

7-4-3. Title A/D Level Adjustment

Subject	Color bar chart standard picture frame
Measurement Point	Confirmed on monitor TV
Measuring Instrument	
Adjustment Address	21 (TITLE TH)
Specified Value	See Fig. 7-47.

Note: Make sure that "Y Level Adjustment" is completed.

Adjusting method:

1) Select adjustment address 21 with the adjustment remote controller.
2) Press the MEMORY button (S772 on CF-24P board).
3) Confirm that blue and black portions are superimposed and become white, and confirm that red and magenta portions are not changed.
4) If this condition is not satisfied, change the adjustment data with the adjustment remote controller and repeat steps 2) and 3).
5) Change the adjustment address to store the adjustment data in the memory.

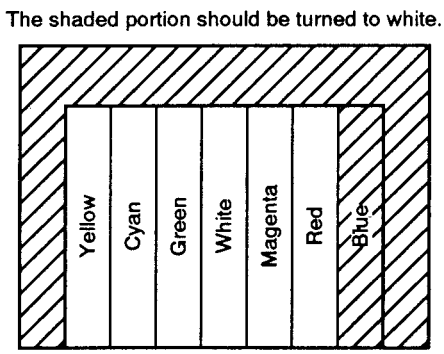

Fig. 7-47.

7-4-4. Title Y Level Adjustment (VC-81P Board)

Subject	All black (cover lens with black cap)
Measurement Point	Pin (A8) (CAM Y) of check point array
Measuring Instrument	Oscilloscope
Adjustment Address	0A (TITLE Y)
Specified Value	570 ± 80 mV

Note: Connect the EVF (electronic viewfinder) for adjustment.

Adjusting method:

1) Cover the lens with the black cap and press the MEMORY button (S772 on CF-24P board).
2) Confirm that "WHITE" characters are displayed in the EVF.
3) Select adjustment address 0A with the adjustment remote controller.
4) Change the adjustment data with the adjustment remote controller to set the Y signal level to 570 ± 80 mV.
5) Change the adjustment address to store the adjustment data in the memory.

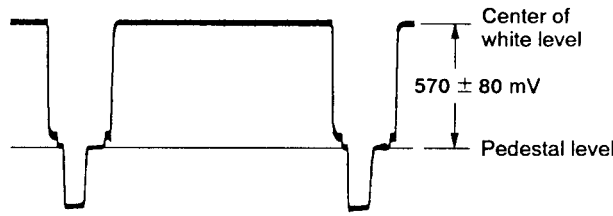

Fig. 7-48.

7-5. ELECTRONIC VIEWFINDER SYSTEM ADJUSTMENT (VF-41P BOARD)

7-5-1. Horizontal Tilt Adjustment

Mode	Playback
Signal	Alignment tape for checking operation (WR5-5CSP) Monoscope portion
Specified Value	See Fig. 7-50.

Adjustment method:

1) Adjust RV955 (BRIGHT) for appropriate brightness on CRT screen.
2) Loosen the DY (deflection yoke) tightening nut. (See Fig. 7-49.)
3) Make a picture horizontal by turning the DY.
4) Retighten the nut. (Do not tighten excessively.)

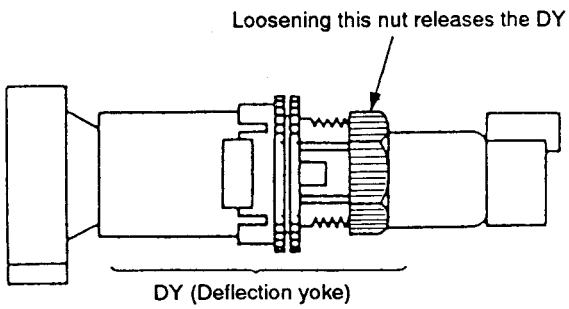

Fig. 7-49.

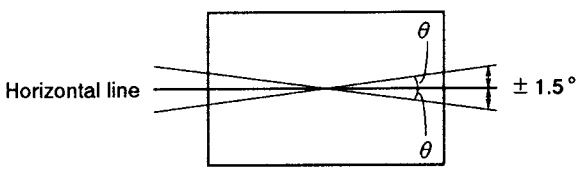

Specified value: Image orientation within ± 1.5° of horizontal line.

Fig. 7-50.

7-5-2. Centering Adjustment

Mode	Playback
Signal	Alignment tape for checking operation (WR5-5CSP) Monoscope portion
Specified Value	See Fig. 7-52.

Adjustment method:

1) Turn the centering adjustment rings to provide an image with even right, left, upper and lower margins. (See Fig. 7-51.)

Note: Since the centering position is affected by the earth magnetism, turn the equipment over 360 ° horizontally, and make adjustments at the orientation which exhibits median displacements of the image.

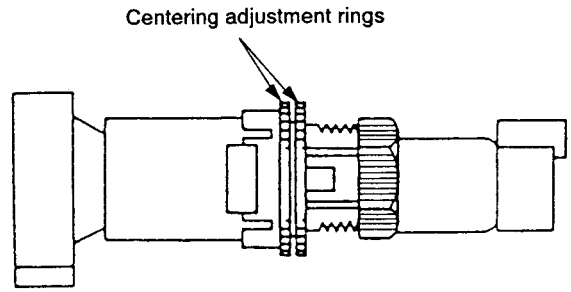

Fig. 7-51.

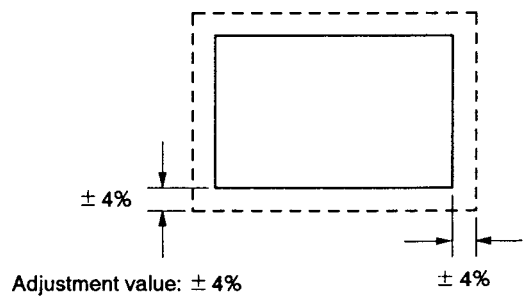

Fig. 7-52.

7-5-3. AFC Adjustment

Mode	E-E or Camera standby
Signal	Color bar
Measurement Point	C954 ⊕ side
Measuring Instrument	Digital voltmeter or oscilloscope (DC range)
Adjustment Element	RV951 (AFC)
Specified Value	2.6 ± 0.05 Vdc

Adjustment method:

1) Adjust RV951 (AFC) for 2.6 ± 0.05 Vdc.

7-5-4. Horizontal Amplitude Adjustment

Mode	Playback
Signal	Alignment tape for checking operation (WR5-5CSP) Monoscope portion
Adjustment Element	C961
Specified Value	6 ± 2.5%

Adjustment method:

1) Line up the upper and lower sections of the monoscope image with the upper and lower edges of the screen by rotating RV952 (V SIZE).
2) Rotate RV955 (BRIGHT) to set the brightness to the normal level.
3) Short or open the pattern [A] of the H size adjustment capacitor (C961) to provide horizontal overscans of 6 ± 2.5% (total of left and right). (See Fig. 7-54.)

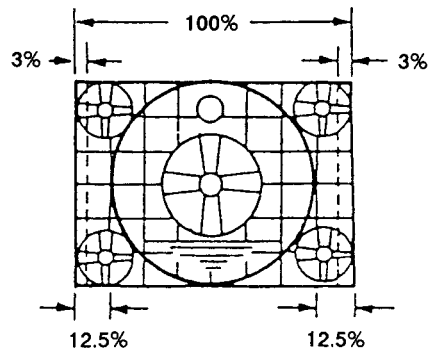

Fig. 7-53.

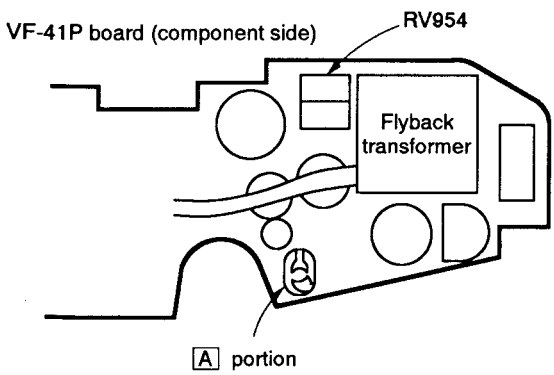

A section	H size
Open	Small
Short	Large

Fig. 7-54.

7-5-5. Vertical Amplitude Adjustment

Mode	Playback
Signal	Alignment tape for checking operation (WR5-5CSP) Monoscope portion
Adjustment Element	RV952 (V SIZE)
Specified Value	5 ± 2.5%

Adjustment method:

1) By turning RV952 (V SIZE), adjust vertical overscan to 5 ± 2.5% (upper and lower total).

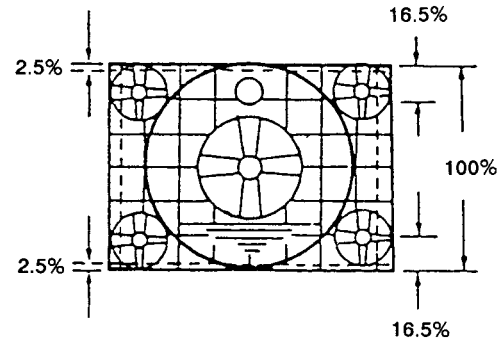

Fig. 7-55.

7-5-6. Focus Adjustment

Mode	Playback
Signal	Alignment tape for checking operation (WR5-5CSP) Monoscope portion
Adjustment Element	RV954

Adjustment method:

1) Adjust to the best focus point with RV954.

7-5-7. Brightness, Contrast Adjustments

Mode	Playback
Signal	Alignment tape for checking operation (WR5-5CSP) Monoscope portion
Adjustment Element	Brightness: RV955 Contrast: RV953

Adjustment method:

1) Adjust RV955 (BRIGHT) and RV953 (CONT) alternately until the bright and dark areas of a gray scale are displayed correctly. (The bright areas should not be made too bright to avoid a fuzzy display of the cross-hatches in the monoscope circle, and the brightness of the dark areas should be such that discrimination between the darkest and second darkest area is possible.)

7-6. ARRANGEMENT DIAGRAM FOR ADJUSTMENT PARTS

VC-81P BOARD (COMPONENT SIDE)
(Also illustrated on page 294.)

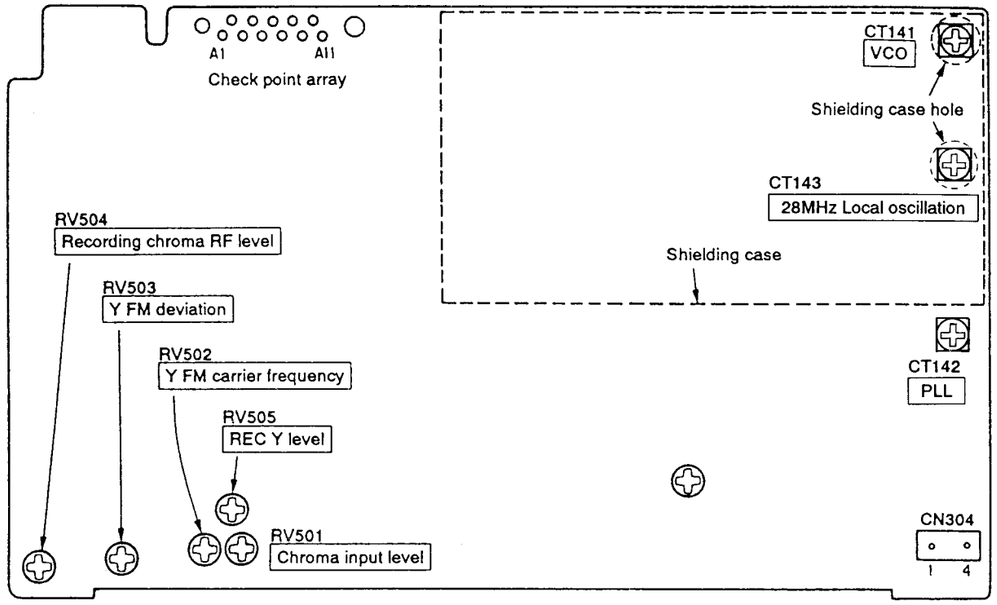

VC-81P BOARD (CONDUCTOR SIDE)
(Also illustrated on page 294.)

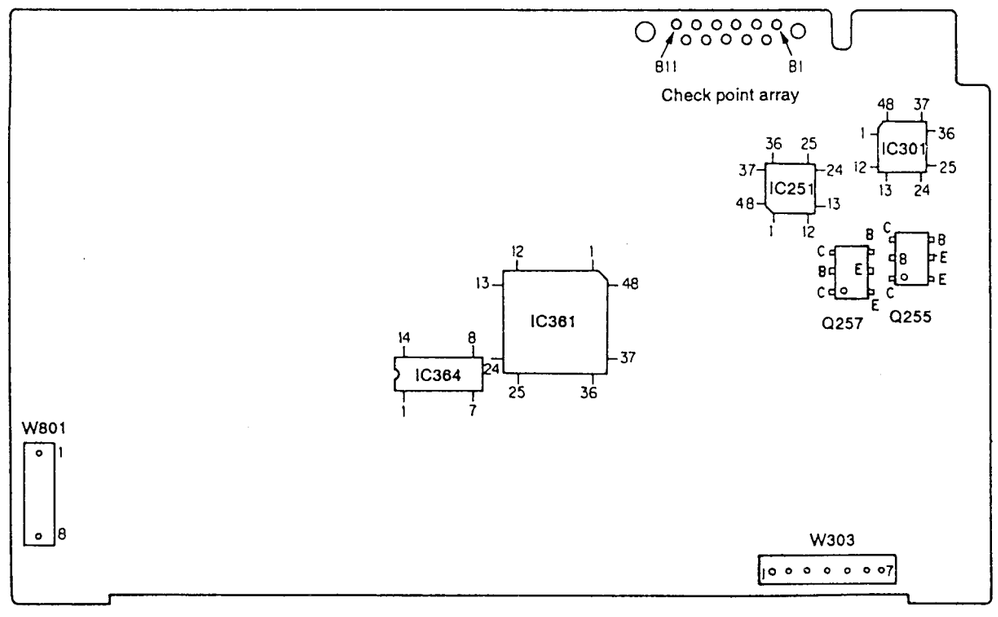

LD-38P

VF-41P
(COMPO

7-6. ARRANGEMENT DIAGRAM FOR ADJUSTMENT PARTS

VC-81P BOARD (COMPONENT SIDE)
(Also illustrated on page 294.)

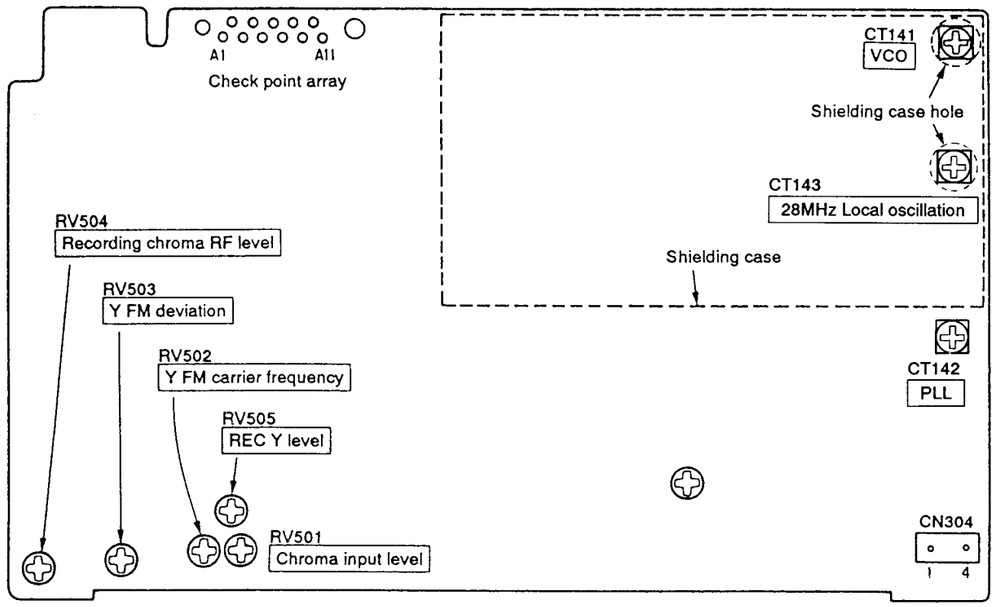

VC-81P BOARD (CONDUCTOR SIDE)
(Also illustrated on page 294.)

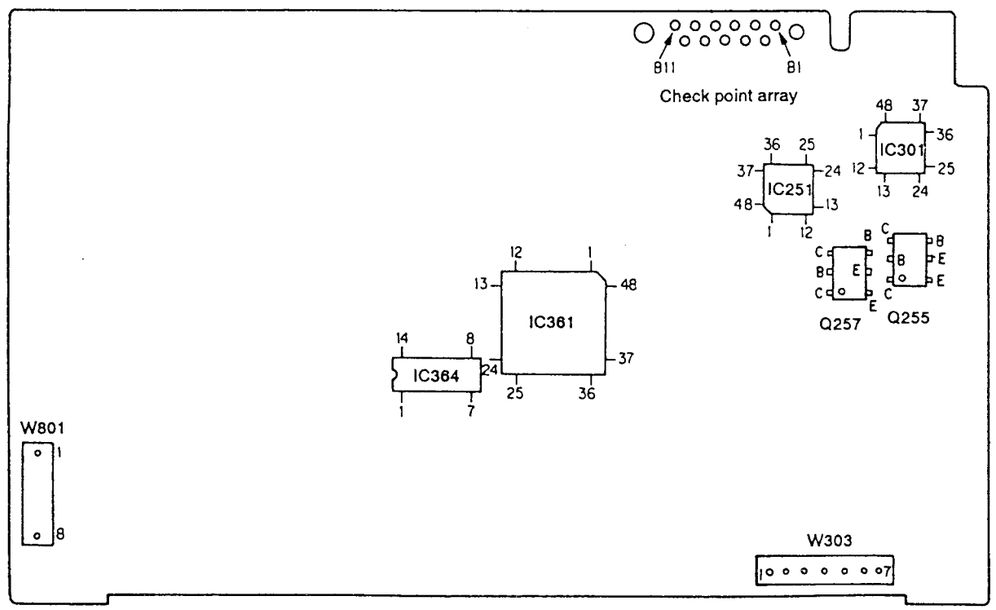

LD-38P BOARD (COMPONENT SIDE)

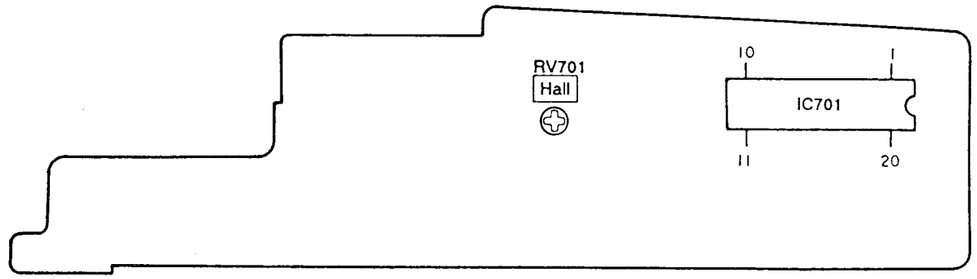

TI-32P BOARD (COMPONENT SIDE)

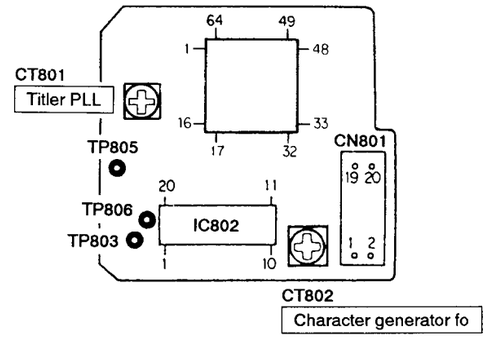

VF-41P BOARD (COMPONENT SIDE)

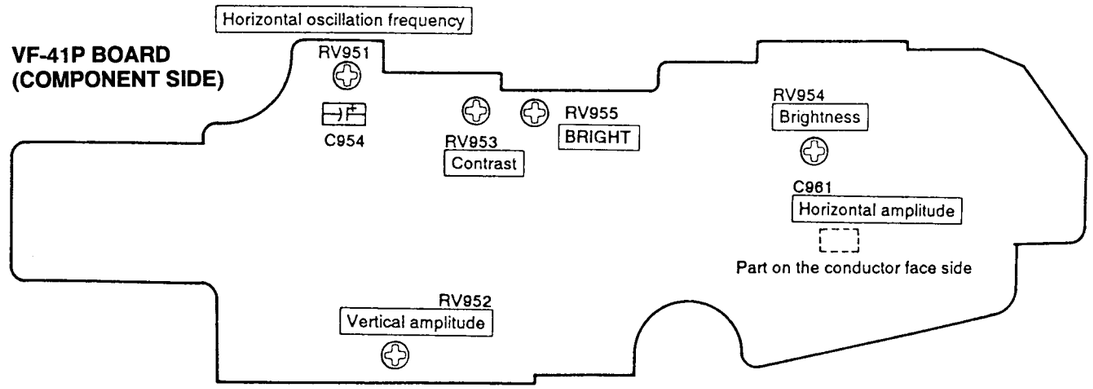

SECTION 8
MECHANISM BLOCK ADJUSTMENT

Refer to the separate "8 mm Video Mechanism Block Adjustment Guide III U mechanism for adjustment and checking of the mechanism block and for replacement of mechanical parts.

8-1. OPERATING WITH THE CASSETTE COMPARTMENT HOLDER ASSEMBLY REMOVED (See Fig. 8-1.)

Note: The unit will not function when a strong light source is near the unit.

1. Loading

1) Remove the outer and camera blocks referring to "section 2. DISASSEMBLY", and supply the power to the unit. (Set up the mechanism deck so as to operate.)
2) Set the power switch to "VTR" or "PLAYER" position.
3) Cover the LED assembly with ❶ opaque cap or the like.
4) Keep pressing the EJECT lever ❸ in the Ⓐ direction until the loading is completed.

2. Setting to the playback state

1) Perform the steps in "1. Loading".
2) Press the playback button.

3. Setting to the recording state

1) Perform the steps in "1. Loading".
2) Fix the RECOG switch ❷ with an adhesive tape.
3) Turn on the REC switch. (E, Australian model)
   Connect Pins ③ and ⑬ of CN603 on the VS-69 board with a jumper wire until the enters the REC mode. (AEP, UK model)

4. Ejecting

1) Press the EJECT button.

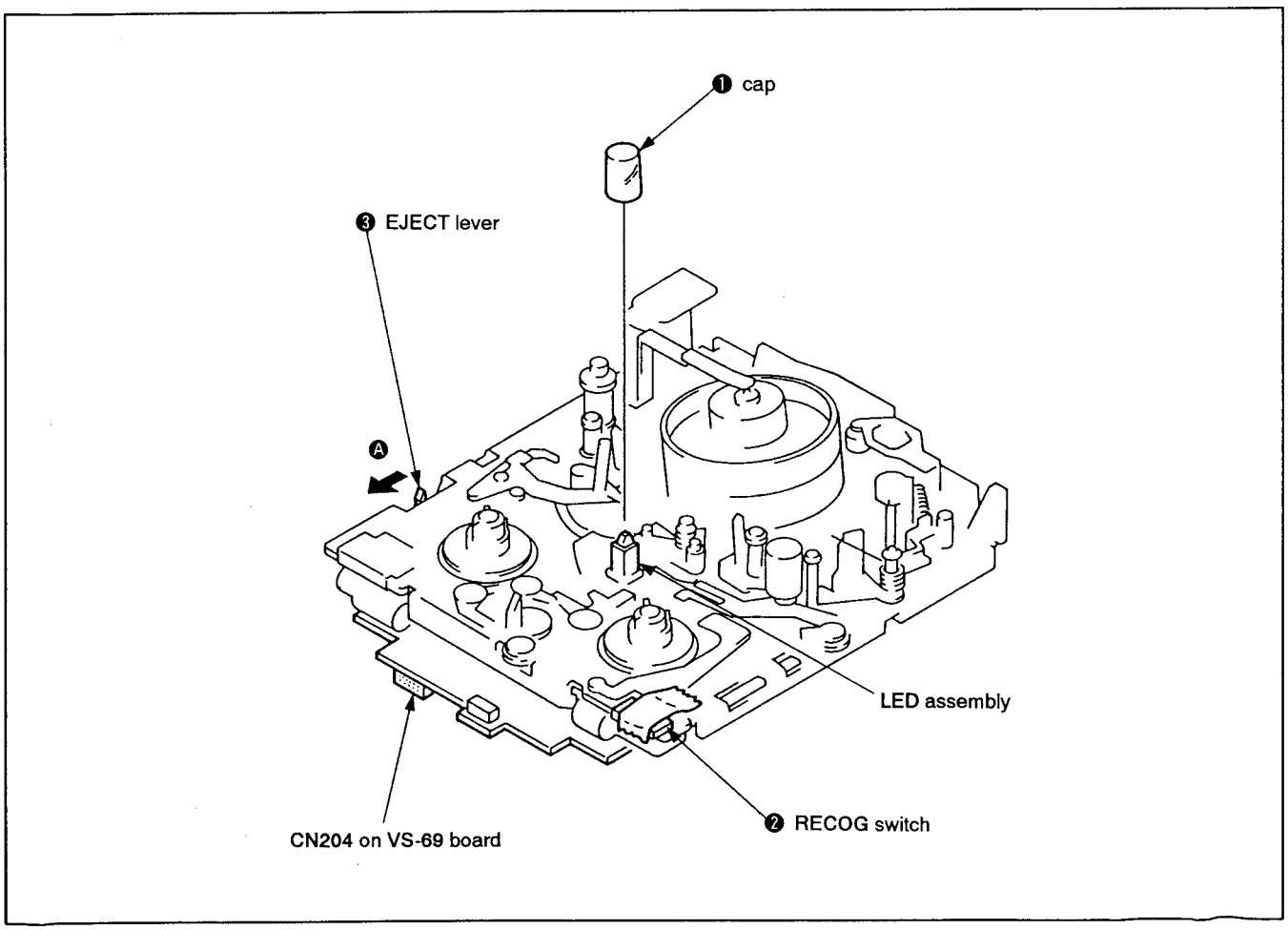

Fig. 8-1.

8-2. TAPE PATH ADJUSTMENT

1. Preparations

1) Clean the tape running surface (tape guide, drum, capstan shaft and pinch roller).
2) Short circuit Pins ③ and ⑦ of CN204 on the VS-69 board to set the PATH mode.
3) Connect to the oscilloscope.
   Channel 1...Pin ② of CN204 on VS-69 board
   External trigger...Pin ④ of CN204 on VS-69 board
4) Play back the tracking alignment tape (WR5-1CP or WR5-1C).
5) Confirm that the RF waveforms at both sides of the entrance and exit on the oscilloscope are flat.
   If not, perform the adjustment following "8 mm Video Mechanism Adjustment Guide III U mechanism ".

CN204 on VS-69 board

1	PB RF CH1
2	PB RF CH2
3	PB RF GND
4	RF SWP
5	UN (1/2 RF SWP)
6	UN (REC C CHECK)
7	UN (PATH)
8	UN (TEST)
9	UN (CAM ADJ)
10	UN (SP)/LP
11	DRUM I COM
12	CAP FG

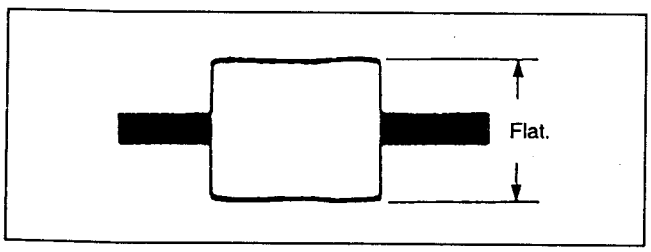

Fig. 8-2.

SECTION 9
VIDEO BLOCK ADJUSTMENTS

During the adjustments, see the arrangement diagram for adjustment parts from page 294.

9-1. PRE-ADJUSTMENT PREPARATIONS (VIDEO BLOCK)

Use the following measuring instruments for adjustment of the Video block.

9-1-1. Equipment to be Used

1) Monitor TV
2) Dual trace oscilloscope of over 10 MHz band, incorporates delay mode. (Use 10:1 probe unless otherwise specified.)
3) Frequency counter
4) Pattern generator with video output terminal
5) Digital voltmeter
6) Audio generator
7) Audio level meter
8) Audio distortion meter
9) Audio attenuator
10) Regulated power supply
11) Alignment tapes
    Tracking adjustment (WR5-1CP)*1
    Parts Code: 8-967-995-07
    Video frequency characteristics adjustment (WR5-6C)*2
    Parts Code: 8-967-995-17
    Operation check (WR5-4CL)*3
    Parts Code: 8-967-995-56
    Operation check (WR5-5CSP)*4
    Parts Code: 8-967-995-47

    Note:
    *1 WR5-1C (8-967-995-06) is also available.
    *2 WR5-2C (8-967-995-16) is also available.
    *3 WR5-3CL (8-967-995-36) is also available.
    *4 WR5-3CSP (8-967-995-27) and WR5-4CSP (8-967-995-46) are also available.
12) Adjustment remote controller (J-6082-053-A)

9-1-2. Connection of Equipment

Unless otherwise specified, adjustments are made with the measuring instrument connected as shown in Fig. 9-1.

- Camera/video power switch
  PLAYER position (AEP, UK model)
  VTR position (E, Australian model)
- Input/output selector switch ···· OUTPUT position
  ※ E, Australian model only
- Connect the adjustment remote controller to the remote terminal (J941 on the SW-158P board) when performing "Battery Down Adjustment".

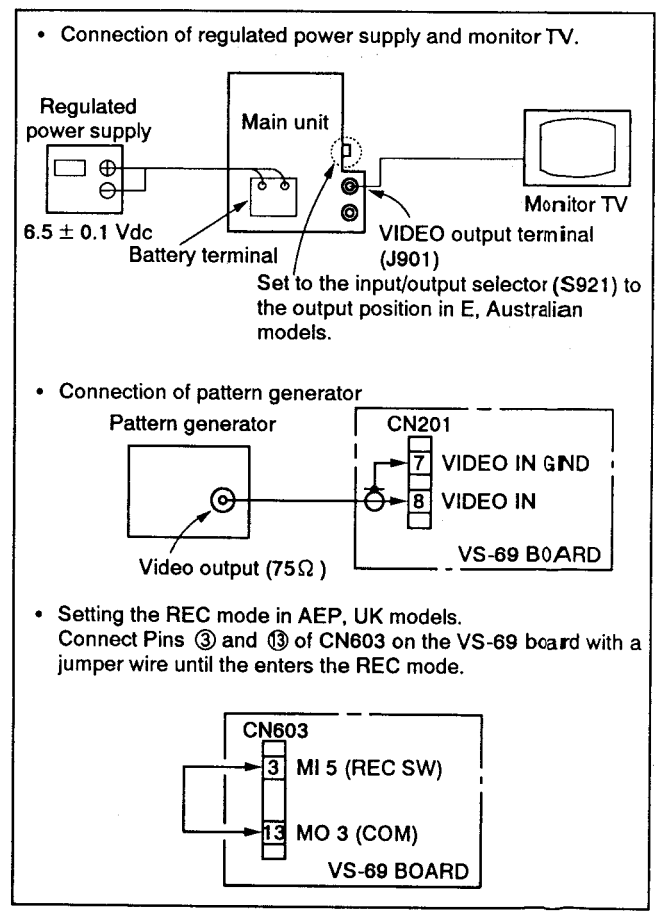

Fig. 9-1.

9-1-3. Note on Adjustments

The video block adjustment can be made without the camera block and the cabinet R except "Battery Down Adjustment" of system control adjustment. Remove the following four connectors in case of removing the camera block.

1. CN3 (8-pin) on DD-31P board
2. CN202 (7-pin) on VS-69 board
3. CN802 (16-pin) on VC-81P board
4. CN904 (3-pin) on FK-41P board.

The cabinet L is not required except for "Battery Down Adjustment". When removing the cabinet L, remove following connector.

1. CN911 (10-pin) on ZOOM SWITCH board.

The EVF (electronic viewfinder) block is not required for the video block adjustment. When removing the EVF block, remove the following connector.

1. CN205 (4-pin) on VS-69 board.

The microphone board (MA-71P board) is not required for the video block adjustment. When removing the microphone board, remove the following connector.

1. CN402 (3-pin) on AU-92P board.

Remove the following four boards from the MD frame, in case of adjusting the audio system or opening the VS-69 board.

1. FK-41P board
2. AU-92P board
3. DD-31P board (DC-DC converter)
4. VS-69 board

The zoom switch board is not required for the video block adjustments. When removing the zoom switch board, remove the following connector.

1. CN903 (11-pin) on FK-41P board.

9-1-4. Set-up for Adjustment

Since the video signal obtained from the pattern generator is used as the adjusting signal for the electrical adjustment, this video output signal should meet the required specifications. Connect an oscilloscope to Pin ⑧ (VIDEO IN) of CN201 on the VS-69 board and make sure that the amplitude of the video SYNC signal is approximately 0.3V, that the amplitude of the video image is approximately 0.7V, that the burst signal amplitude is approximately 0.3V with flat characteristics, and that the signal level ratio between the burst signal and "Red" signal is 0.30:0.66. The video signal (color bars) used for electrical adjustment are shown in Fig. 9-2.

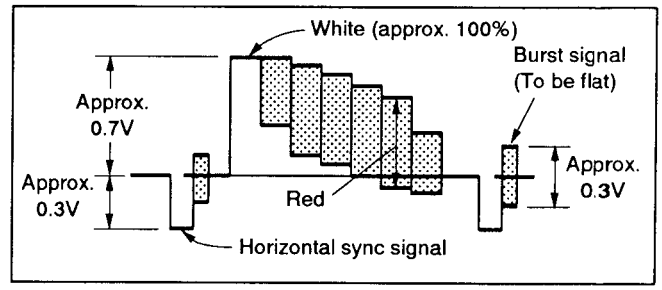

Fig. 9-2. Color bar signal of pattern generator

9-1-5. Alignment Tapes

The following alignment tapes are available.
Use the tape indicated in the signal column; however, in case there is no type indication in the signal column, use any tape for operation check.

Tape	REC mode	Type	Tape speed	Contents		Use
				Video area	PCM area	
Tracking WR5-1CP	L	MP	SP	CH2: 1 MHz tape path adjustment signal		Tape path adjustment
Video freq. characteristics WR5-6C	L	MP	SP	RF sweep: 0 to 10 MHz Marker: 1, 3.58, 5.5, 7MHz		Frequency characteristics adjustment
Operation check (SP mode) WR5-4CSP or WR5-5CSP	L	MP	SP	• Video signal Color bar: 4 min. Monoscope: 4 min. • Audio signal (AFM) 400 Hz, 60% modulation	• Audio signal (PCM) Monoscope: 20 Hz 20sec 400 Hz 20sec 14 kHz 20sec } Repeat four times. Color bar: 1 kHz 4 min.	Operation check
Operationn check (LP mode) WR5-4CL	L	MP	LP	• Video signal Color bar: 4 min. Monoscope: 4 min. • Audio signal (AFM) 400 Hz, 60% modulation		

Note: Recording mode
L ····· Conventional mode
E ····· Hi8 (high band) mode

Tape type
MP····· Particle type metal tape
ME····· Evaporated type metal tape

Table 9-1.

75% color bar signal recorded on an alignment tape is shown in Fig. 9-3.

Note: Measured at VIDEO output terminal.
(75Ω termination)

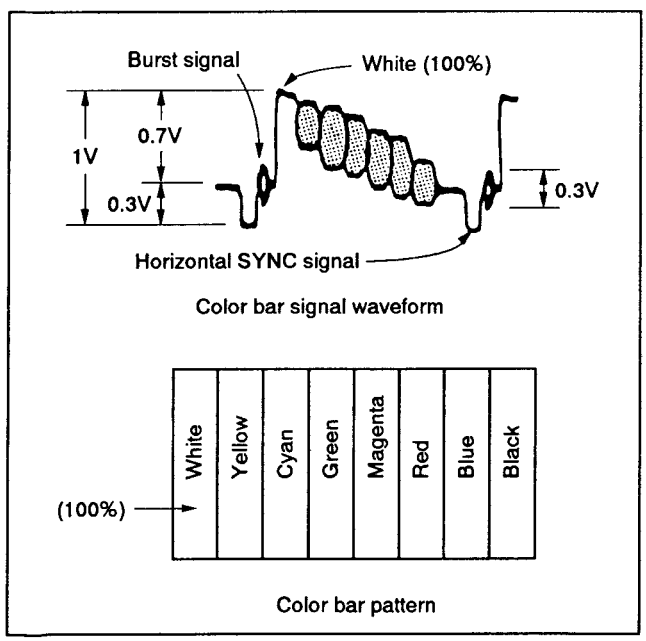

Fig. 9-3. Alignment tape color bar signal

9-1-6. I/O Level and Impedance

Video input*1 Pin jack
Input signal: 1 Vp-p, 75Ω unbalanced, negative sync

Video output Pin jack
Output signal: 1 Vp-p, 75Ω unbalanced, negative sync

Audio input*1 Pin jack
Input level: –7.5 dBs (0 dBs=0.775 Vrms)
Input impedance: More than 47 kΩ

Audio output Pin jack
Specified output: –7.5 dBs
Output impedance: 2.2 kΩ or less

*1 E, Australian models only.

9-1-7. Service Modes

This unit is equipped with service modes for adjustment and operation checking.

There are the following two service modes and switching between them is made by connection between GND and Pin (B6) of the check point array CPA001 on the VC-81P board.

Service Mode	Function	Connection between GND and Pin (B6) of the check point array
Status indication mode	For video block adjustment, operation checking	Open (no connection)
EVR adjustment mode	For adjustment of camera block	Shorted

Refer to "Camera Block Adjustment" for details on the EVR adjustment mode.

1. Invoking service mode

1) Connect the adjustment remote controller to the remote terminal (J941 on SW-158P board) of the main unit.
2) Set HOLD switch of the adjustment remote controller to the HOLD position (SERVICE position).

The status indication mode is invoked by the above operation. (To select the EVR adjustment mode, connect between Pin (B6) of the check point array CPA001 and GND with a jumper wire.)

2. Indication on adjustment remote controller LCD in the status indication mode

Note: In categories 1 through 5, the same information is displayed on the EVF screen.

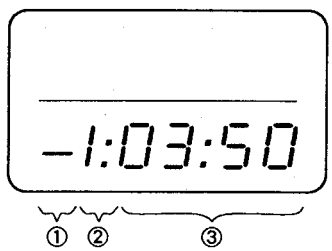

①.....Minus segment flashes to indicate that the service mode has been invoked.
②.....Indicates service mode category.
③.....Indicates battery voltage, LAST EMG, PRESET EMG, MODE SW CODE, or DEW MODE according to current category.

3. Category selection and indication in each category

Select the desired category with FF button of the adjustment remote controller. There are five categories (1 through 5) and the indications are different for each. (Note that the category 0 is the EVR adjustment mode.)

Caategory	Indication on LCD
1	A/D conversion value for battery voltage (decimal indication)[Note 1] 00 : 00 – 02 : 55
2	LAST EMG (last emergency)[Note 2] Refer to Service Mode Error Indications.
3	PRESENT EMG (current emergency)[Note 3] Refer to Service Mode Error Indications.
4	MODE SW CODE (mechanism status) 00 : 00 — I.A 00 : 01 — I.C 00 : 02 — I.B 00 : 03 — STOP 00 : 04 — EJECT 00 : 05 — FWD (REC, PB, FF, REW, CUE, REVIEW, PAUSE) 00 : 06 — UNLOAD 00 : 07 — I.D
5	DEW MODE 00:00 — NORMAL 00:01 — SENSOR ON DEW MODE (sensor in DEW mode) 00:02 — SENSOR OFF DEW MODE (Restart of operation is possible after the following conditions have been satisfied: 1. EJECT 2. More than 1H has elapsed.)

Note: 1) Indicates a value proportional to the battery voltage.
2) LAST EMG indicates the error occurred just before entering the service mode. Even if an error occurs in the service mode, it is not indicated.
3) PRESENT EMG indicates the status when FF button of the adjustment remote controller was pressed. So, the indication does not change even if the error is eliminated.

- **Service mode error indication**

Error Status	PRESENT EMG Indication	LAST EMG Indication
No error	00 : 00	00 : 00
Loading motor	00 : 01	00 : 01
REEL FG error during unthreading	00 : 02	00 : 02
REEL FG error not during unthreading	00 : 03	00 : 03
Capstan error	00 : 04	00 : 04
DRUM FG error (0) when starting drum	00 : 05	00 : 05
DRUM FG error (1) when starting drum	01 : 05	00 : 14
DRUM FG error (2) when starting drum	02 : 05	00 : 15
No DRUM PG (0) when starting drum	00 : 06	00 : 06
No DRUM PG (1) when starting drum	01 : 06	00 : 14
No DRUM PG (2) when starting drum	02 : 06	00 : 15
DRUM FG error (0) when drum stationary	00 : 07	00 : 07
DRUM FG error (1) when drum stationary	01 : 07	00 : 14
DRUM FG error (2) when drum stationary	02 : 07	00 : 15
No DRUM PG (0) when drum stationary	00 : 08	00 : 08
No DRUM PG (1) when drum stationary	01 : 08	00 : 14
No DRUM PG (2) when drum stationary	02 : 08	00 : 15
Phase error (0) when drum stationary	00 : 09	00 : 09

(1) During tape threading
(2) During tape unthreading
(0) Others

4. Releasing the service mode

The service mode can be released by returning HOLD switch of the adjustment remote controller to the NORMAL position or by disconnecting the adjustment remote controller from the remote terminal.

9-2. POWER SUPPLY BLOCK ADJUSTMENTS

9-2-1. Oscillation frequency adjustment (DD-31P Board)

Mode	Playback
Signal	Arbitrary tape
Measurement Point	Pin ⑦ of IC102
Measuring Instrument	Frequency counter
Adjusting Element	RV105
Specified Value	475 ± 5 kHz

Adjusting method:
1) Adjust RV105 for 475 ± 5 kHz.

9-2-2. VIDEO 5V adjustment (DD-31P Board)

Mode	Power ON
Measurement Point	Pin ② of CN102
Measuring Instrument	Digital voltmeter
Adjusting Element	RV103
Specified Value	4.92 ± 0.01 V

Adjusting method:
1) Adjust RV103 for 4.92 ± 0.01V.

9-2-3. Power Supply Check (VS-69 Board)

Mode	Power ON
Measuring Instrument	Digital voltmeter
VIDEO 5V	
Measurement Point	Pin ② of W605
Specified Value	4.92 ± 0.04V
REG 5V	
Measurement Point	Pin ③ of W605
Specified Value	4.91 ± 0.04V
EVF 5V	
Measurement Point	Pin ① of W605
Specified Value	4.96 ± 0.03V
MOTOR 5.1V	
Measurement Point	Pin ⑩ of CN602
Specified Value	$5.1\ ^{+0.3V}_{-0.4V}$

Checking method:
1) Each power supply voltage should meet the corresponding specified value.

9-3. SYSTEM CONTROL ADJUSTMENTS

9-3-1. Battery Down Adjustment (DD-31P Board)

Mode	CAMERA recording
Signal	Arbitrary
Measurement Point	Check on LCD of adjustment remote controller
Measuring Instrument	
Adjusting Element	RV101
Specified Value	"–1:01:46"

Connections:

1) Connect a regulated power supply and digital voltmeter as shown in Fig. 9-4.
2) Connect Pins ⑧ (UN (TEST)) and ③ (PB RF GND) of CN204 on the VS-69 board with a jumper wire. (TEST mode)
3) Confirm that REC MODE switch is SP position. (Setting of SP mode)

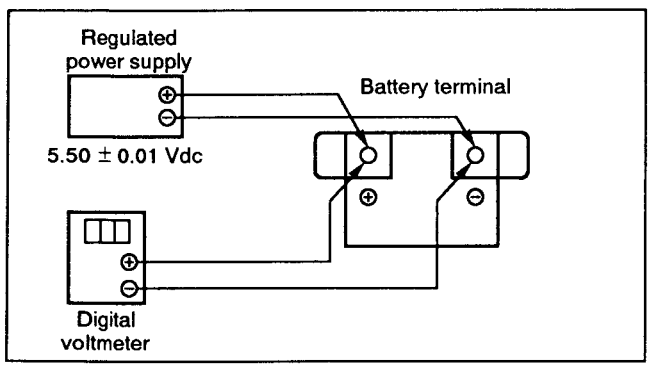

Fig. 9-4.

Adjusting method:

1) Connect the adjustment remote controller to the remote terminal (J941 on SW-158P board).
2) Set the power supply switch (S901) on the FK-41P board to CAMERA position to select the camera recording mode.
3) Set HOLD switch of the adjustment remote controller to the HOLD position (service position).
4) Confirm that the indication of the digital voltmeter is 5.50 ± 0.01 Vdc.
5) Set the LCD counter indication on the adjustment remote controller to "–1:01:46" using RV101 on the DD-31P board. (refer to Fig. 9-6.)

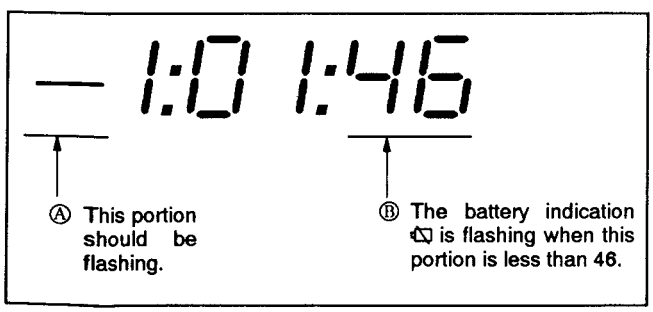

Fig. 9-5.

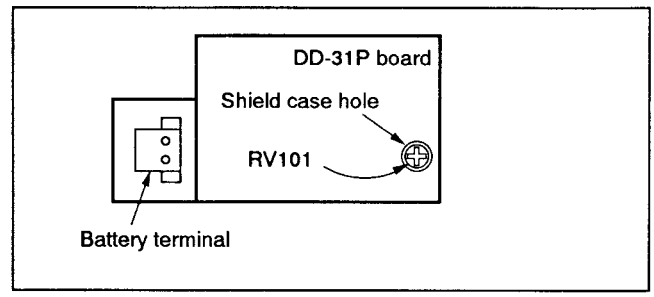

Fig. 9-6.

Checking method:

Remove connections 2) and 3) and check the following points. If the required conditions are not obtained, repeat the adjustments again.

1) Adjust the output voltage of the regulated power supply so that the digital voltmeter reading becomes 5.65 ± 0.01 Vdc. (VTR in camera recording mode)
2) Confirm that the mark is not lit on the EVF (viewfinder) screen (TALLY lamp is lit).
3) Lower the output voltage of the regulated power supply so that the digital voltmeter reading becomes 5.53 ± 0.01 Vdc.
4) Confirm that the mark and the TALLY lamp are flashing in approx. 1 sec intervals on the EVF screen.
5) Lower the output voltage of the regulated power supply so that the digital voltmeter reading becomes 5.47 ± 0.01 Vdc.
6) Confirm that the flashing interval of the mark and the TALLY lamp on the EVF screen becomes shorter, and that the VTR stops and the power is turned off.

9-3-2. System Clock Adjustment (VC-81P Board)

Note: Perform the adjustment without the lens.

Mode	Power ON
Measurement Point	Pin ⑲ of IC561
Measuring Instrument	Frequency counter
Adjusting Element	RV561
Specified Value	330 ± 5 kHz

Adjusting method:

1) Adjust RV561 for 330 ± 5 kHz.

9-4. SERVO SYSTEM ADJUSTMENTS

9-4-1. Capstan FG Frequency Check (VS-69 Board)

Mode	Recording (SP/LP)
Signal	Arbitrary
Measurement Point	Pin ⑫ (CAP FG) of CN204
Measuring Instrument	Frequency counter
Specified Value	SP mode: 1327 ± 2 Hz LP mode: 663.5 ± 2 Hz

Checking method:

1) Connect Pin ⑩ of CN204 to ground with a jumper wire or set REC MODE switch to the LP position. (Setting of LP mode)
2) Set to the recording mode and confirm that the capstan FG frequency is 663.5 ± 2 Hz.
3) Set to the stop mode and remove the jumper wire between Pin ⑩ of CN204 and GND or set REC MODE switch to the SP position. (Setting of SP mode)
4) Set to the recording mode and confirm that the capstan FG frequency is 1327 ± 2 Hz.

9-4-2. Capstan FG Offset Adjustment (VS-69 Board)

Mode	Recording
Signal	Arbitrary
Measurement Point	Pin ⑫ (CAP FG) of CN204
Measuring Instrument	Oscilloscope
Adjusting Element	RV502
Specified Value	50 ± 1% duty cycle

Adjusting method:

1) Adjust RV502 so that the CAP FG output waveform duty cycle becomes 50 ± 1%.

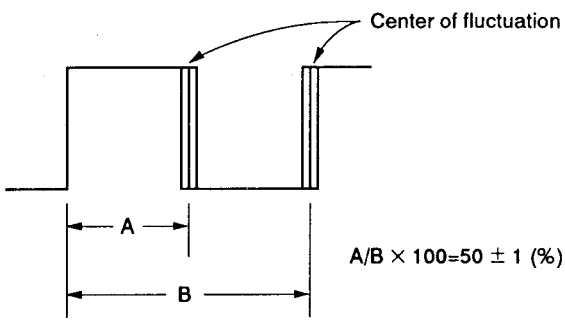

Fig. 9-7. Capstan FG offset adjustment

9-4-3. Drum Phase Lock Check (VS-69 Board)

Mode	Recording (SP)
Signal	Arbitrary
Measurement Point	CH-1: Pin ⑪ (SYSTEM SYNC) of IC601 CH-2: Pin ④ (RF SWP) of CN204
Measuring Instrument	Oscilloscope
Specified Value	224 ± 50 μsec

Checking method:

1) Confirm that duration between the switching point of CH-2 (RF SWP) and the rising edge of CH-1 (SYSTEM SYNC) is 224 ± 50 μsec.

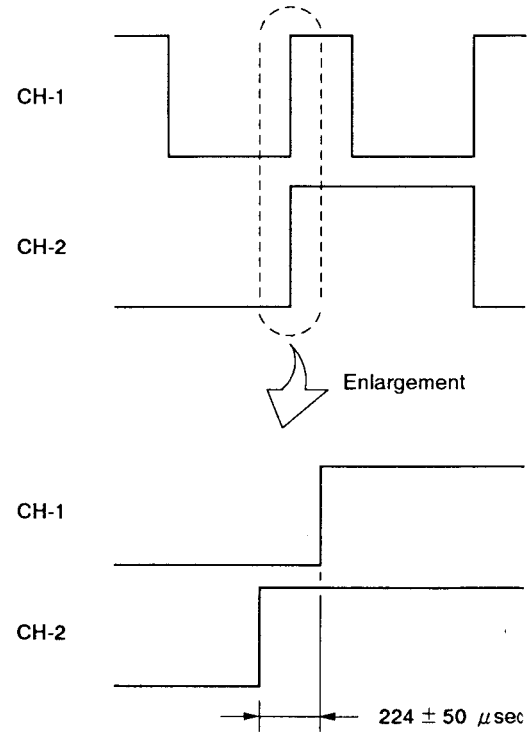

Fig. 9-8. Drum phase lock check

9-4-4. Switching Position Adjustment (VS-69 Board)

Mode	Playback
Signal	Alignment tape: For operation checking (WR5-5CSP)
Measurement Point	CH-1: Video output terminal CH-2: Pin ④ (RF SWP) of CN204
Measuring Instrument	Oscilloscope
Adjusting Element	RV602
Specified Value	6.5 ± 0.3H (410 ± 20 μsec)

Connection:

1) Connect Pin ⑧ (UN (TEST)) of CN204 to ground with a jumper wire. (TEST mode)
2) Confirm that REC MODE switch (S770 on CF-25P board) is SP position. (Setting of SP mode)

Adjusting method:

1) Adjust RV602 for 6.5 ± 0.3H (410 ± 20 μsec).

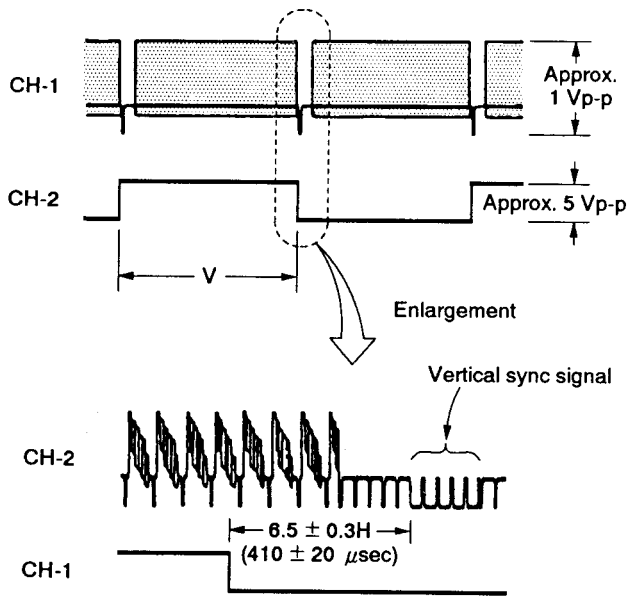

Fig. 9-9. Switching position adjustment

9-5. VIDEO BLOCK ADJUSTMENTS

The adjustment of the video system should in principle follow the adjustment procedure outlined below.
The color video signal supplied from the pattern generator is utilized as the video input signal for the video system adjustment in the recording mode. Make sure that the sync signal and the color burst signal match the specifications given in Set-up for adjustment, as shown in Fig. 9-2.

[Adjustment procedure]

1) Playback frequency characteristics adjustment
2) Flying erase check
3) Crystal oscillator fo adjustment
4) Y/C Separation adjustment
5) IR2 adjustment
6) SYNC AGC adjustment
7) Emphasis input level adjustment
8) PB Y level 1 adjustment
9) PB Y level 2 adjustment
10) Y FM carrier frequency adjustment
11) Y FM deviation adjustment
12) Chroma emphasis fo adjustment
13) REC C RF level adjustment
14) REC Y level adjustment
15) REC ATF level checking
16) Feedback chroma adjustment
17) Quasi burst phase adjustment
18) Delay burst phase adjustment

9-5-1. Playback Frequency Characteristics Adjustment (VS-69 Board)

Note: The adjusting element for CH2 is shown in parentheses [ ].

Mode	Playback
Signal	Alignment tape: For frequency characteristics adjustment (WR5-6C)
Measurement Point	CH1: Pin ① [Pin ②] of CN204 EXT TRIG: Pin ④ of CN204
Measuring Instrument	Oscilloscope TRIG SLOPE: +, [–]
Adjusting Element	RV113 [RV112]
Specified Value	3.58 MHz level : 5.5 MHz level =4 : (2.9 ± 0.3)

Adjusting method:

1) Adjust RV113 [RV112] so that the ratio of the 3.58 MHz level to the 5.5 MHz level of the PB RF output waveform becomes 4: (2.9 ± 0.3).

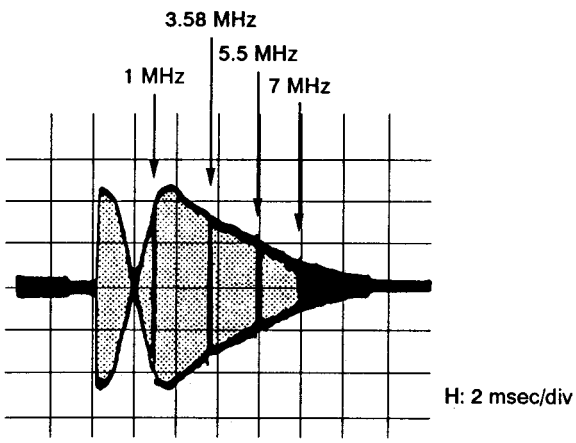

Fig. 9-10. Playback frequency characteristics adjustment

9-5-2. Flying Erase Check (VS-69 Board)

Mode	Recording
Signal	Arbitrary
Measurement Point	Pin ⑮ of CN101 (FE (X))
Measuring Instrument	Oscilloscope and frequency counter
Specified Value	Frequency: Over 7.0 MHz Voltage: Over 6.0 Vp-p

Note: Be sure to use MP type tape.
(Pin ⑫ of CN602 should be "L".)

Checking method:

1) Confirm that the oscillation frequency is over 7.0 MHz and that the oscillation voltage is over 6.0 Vp-p.

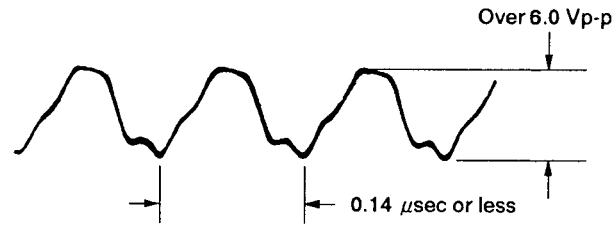

Fig. 9-11. Flying erase check

9-5-3. Crystal Oscillator fo Checking (VS-69 Board)

Mode	Playback
Signal	Alignment tape: For operation checking (WR5-5CSP)
Measurement Point	Pin ⑯ of IC203
Measuring Instrument	Frequency counter
Specified Value	4433618 ± 100 Hz

Note: Connect the frequency counter through a buffer of high impedance (approx. 10 MΩ) and low capacitance (10 pF or less).

Checking method:

1) Confirm that the oscillation frequency at Pin ⑯ of IC203 is 4433618 ± 100 Hz.

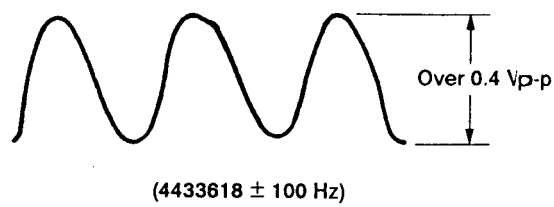

Fig. 9-12. Crystal oscillator fo adjustment

9-5-4. Y/C Separation Adjustment (VS-69 Board)

Mode	Recording
Signal	Color bars
Measurement Point	Any terminal of RV203 (DEV) (Pin ㉕ of IC203)
Measuring Instrument	Oscilloscope
Adjustment Element	RV207
Specified Value	Minimum residual chroma component

Connections:

1) Connect Pin ㊴ of IC203 (Pin ⑭ of IC202) to GND with a 10 μF/16V electrolytic capacitor.
(Capacitor negative side to GND)

Adjustment method:

1) Set the residual chroma component to minimum with RV207.

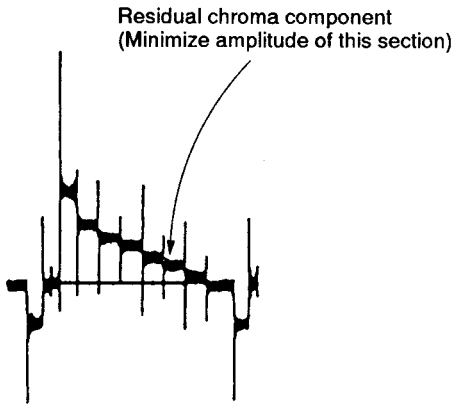

Fig. 9-14. Y/C separation adjustment

9-5-5. IR2 Adjustment (VS-69 Board)

Mode	Recording
Signal	Color bars
Measurement Point	Pin ⑧ of IC203 or base of Q229 (BF OUT)
Measuring Instrument	Oscilloscope
Adjustment Element	RV206
Specified Value	7.0 ± 0.2 μsec

Adjustment method:

1) Adjust RV206 so that it becomes 7.0 ± 0.2 μsec.

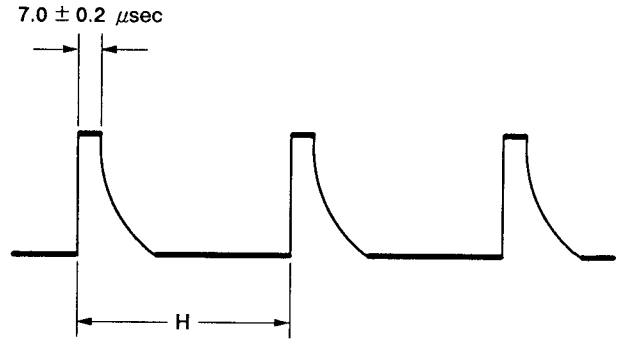

Fig. 9-15. IR2 adjustment

9-5-6. SYNC AGC Adjustment (VS-69 Board)

Mode	Recording
Signal	Color bar
Measurement Point	Pin ㊾ of IC203
Measuring Instrument	Oscilloscope
Adjustment Element	RV201
Specified Value	0.49 ± 0.025 Vp-p

Adjustment method:

1) Adjust with RV201 so that it becomes 0.49 ± 0.025 Vp-p.

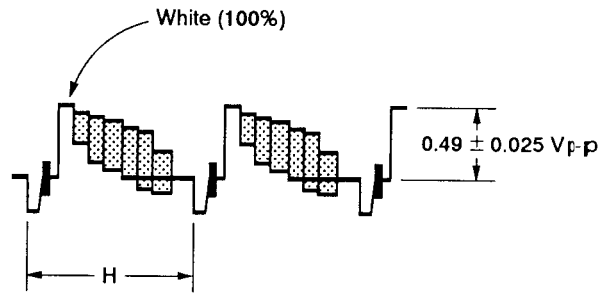

Fig. 9-16. SYNC AGC adjustment

9-5-7. Emphasis Input Level Adjustment (VS-69 Board)

Mode	Recording
Signal	Color bar
Measurement Point	Pin ㊹ of IC203
Measuring Instrument	Oscilloscope
Adjustment Element	RV205
Specified Value	0.50 ± 0.025 Vp-p

Adjustment method:
1) Adjust with RV205 so that it becomes 0.50 ± 0.025 Vp-p.
2) Always perform "PB Y Level 2 Adjustment" after this adjustment.

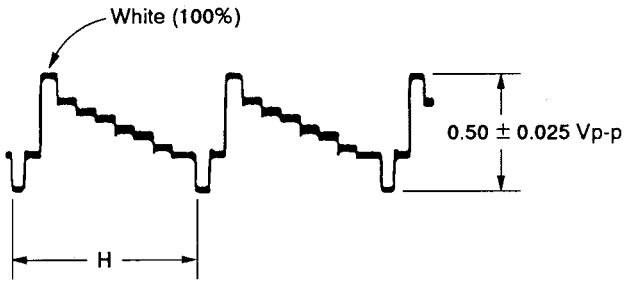

Fig. 9-17. Emphasis input level adjustment

9-5-8. PB Y Level 1 Adjustment (VS-69 Board)

Mode	Playback
Signal	Alignment tape for operation check (WR5-5CSP) Color bar section
Measurement Point	Pin ㊼ of IC203 (Pin ⑤ of IC202)
Measuring Instrument	Oscilloscope
Adjustment Element	RV202
Specified Value	0.50 ± 0.025 Vp-p

Adjusting method:
1) Adjust to 0.50 ± 0.025 Vp-p with RV202.
2) Always perform "PB Y Level 2 Adjustment" after this adjustment.

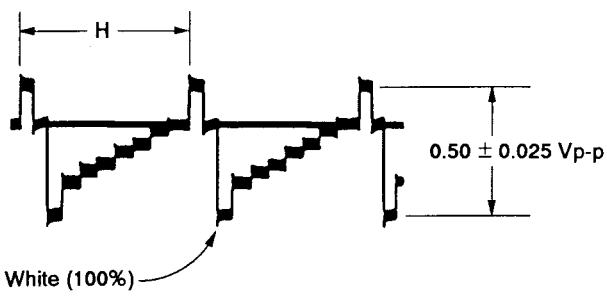

Fig. 9-18. PB Y level 1 adjustment

9-5-9. PB Y Level 2 Adjustment (VS-69 Board)

Mode	Playback
Signal	Alignment tape for operation check (WR5-5CSP) Color bar section
Measurement Point	VIDEO output terminal (J901)
Measuring Instrument	Oscilloscope
Adjustment Element	RV208
Specified Value	$1.00^{+0.025}_{-0.05}$ Vp-p

Note: 1) Terminate VIDEO OUT (J901) at 75Ω .
2) Make sure that "PB Y Level 1 Adjustment" and "Emphasis Input Level Adjustment" have been completed.

Adjustment method:
1) Adjust with RV208 so that it becomes $1.00^{+0.025}_{-0.05}$ Vp-p.

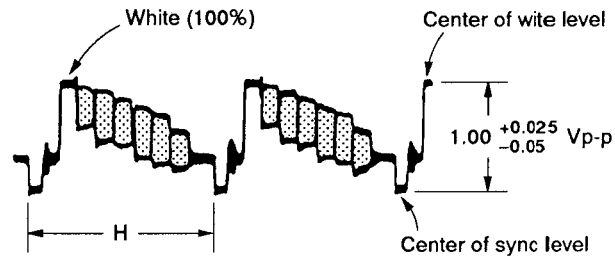

Fig. 9-19. PB Y level 2 adjustment

9-5-10. Y FM Carrier Frequency Adjustment (VS-69 Board)

Mode	Recording
Signal	No signal
Measurement Point	TP161[Note]
Measuring Instrument	Frequency counter
Adjustment Element	RV204
Specified Value	4.39 ± 0.02 MHz

Note: TP161 is the check land. (See Fig. 9-21.)

Adjustment method:

1) Adjust to 4.39 ± 0.02 MHz with RV204.
2) Perform "Deviation Adjustment".

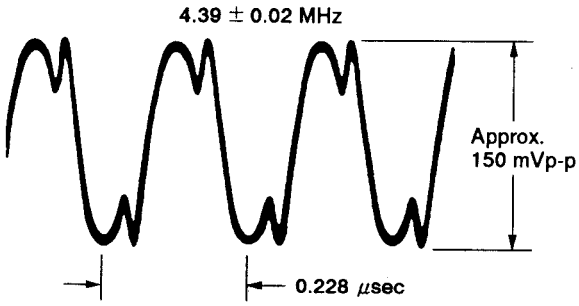

Fig. 9-20. Y FM carrier frequency adjustment

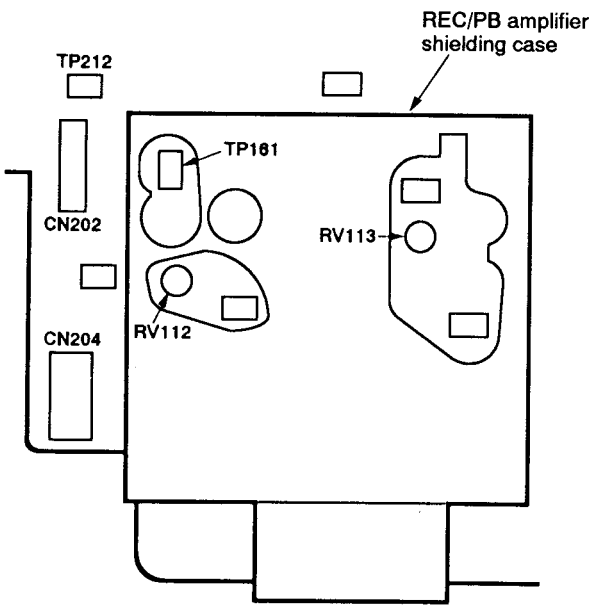

Fig. 9-21.

9-5-11. Y FM Deviation Adjustment (VS-69 Board)

Mode	Recording and playback
Signal	Color bar
Measurement Point	VIDEO output terminal (J901)
Measuring Instrument	Oscilloscope
Adjustment Element	RV203
Specified Value	Playback level is 1.00 ± 0.04 Vp-p

Note: 1) Confirm that "Emphasis Input Level Adjustment", "PB Y Level 2 Adjustment" and "Y FM Carrier Frequency Adjustment" have been completed.
2) Terminate VIDEO OUT (J901) at 75Ω .

Adjustment method:

1) Record the color bar signal.
2) Playback the recorded signal.
3) Confirm the playback output.
   Specified value: 1.00 ± 0.04 Vp-p
4) If the specified value is not satisfied, repeat 1) to 3) after turning RV203 in the following manner.

	Rotation direction of RV203
When larger than specified value	Clockwise (↻)
When smaller than specified value	Counterclockwise (↺)

Table 9-2.

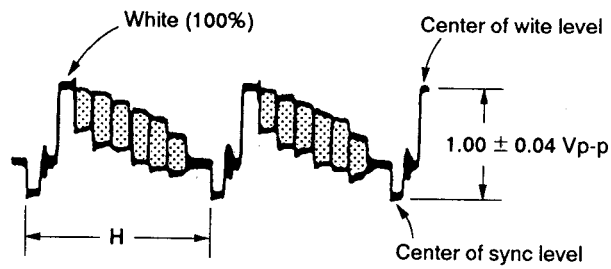

Fig. 9-22. Y FM deviation adjustment

9-5-12. Chroma Emphasis fo Adjustment (VS-69 Board)

Mode	Recording
Signal	Color bar
Measurement Point	TP212 (emitter of Q241)[Note]
Measuring Instrument	Oscilloscope
Adjusting Element	FL201
Specified Value	Minimum fo component

Note: TP212 is the check land (See Fig. 9-21.)

Adjusting method:

1) Adjust FL201 so that the amplitude of flat red portion of the chroma signal becomes minimum.

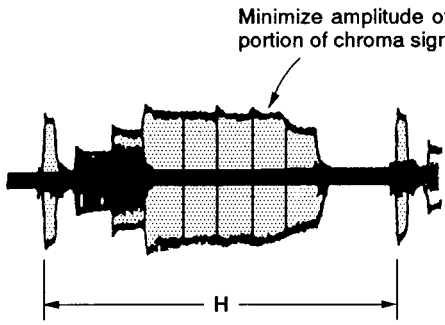

Fig. 9-23. Chroma emphasis fo adjustment

9-5-13. REC C RF Level Adjustment (VS-69 Board)

Mode	Recording (SP)
Signal	Color bar
Measurement Point	TP212 (emitter of Q241)[Note]
Measuring Instrument	Oscilloscope
Adjusting Element	RV210
Specified Value	209 ± 10 mVp-p

Note: TP212 is the check land. (See Fig. 9-21.)

Adjusting method:

1) Adjust RV210 so that the amplitude of flat red portion of the chroma signal becomes 209 ± 10 mVp-p.

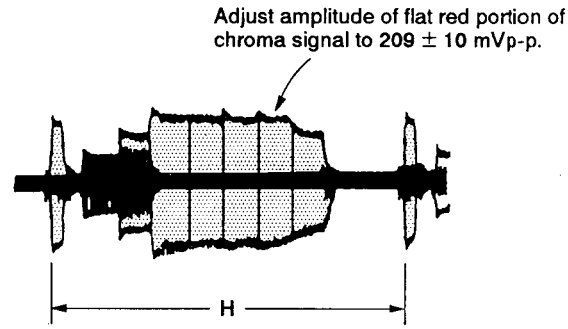

Fig. 9-24. REC C RF level adjustment

9-5-14. REC Y Level Adjustment (VS-69 Board)

Mode	Recording (SP)
Signal	No signal
Measurement Point	TP161 (emitter of Q237)[Note]
Measuring Instrument	Oscilloscope
Adjusting Element	RV209
Specified Value	110 ± 5 mVp-p

Note: TP161 is the check land. (See Fig. 9-21.)

Adjusting method:

1) Adjust RV209 for 110 ± 5 mVp-p.

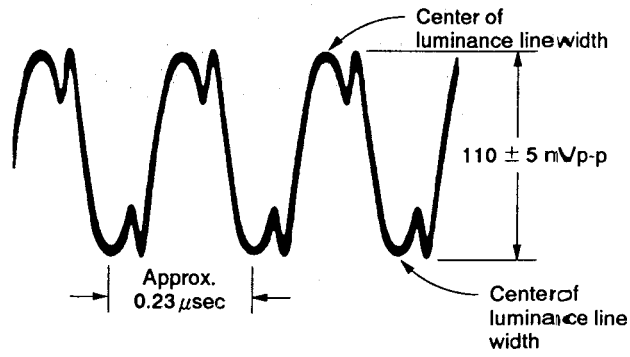

Fig. 9-25. REC Y level adjustment

9-5-15. REC ATF Level Checking (VS-69 Board)

Mode	Recording
Signal	No signal
Measurement Point	Emitter of Q543
Measuring Instrument	Oscilloscope
Specified Value	400 ± 40 mVp-p

Checking method:

1) Confirm that the REC ATF signal level is 400 ± 40 mVp-p.

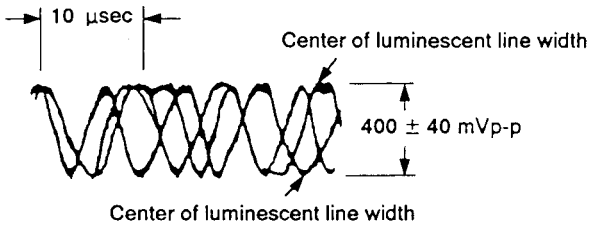

Fig. 9-26. REC ATF level checking

9-5-16. Feedback Chroma Adjustment (CC-52P Board)

Mode	Playback
Signal	Alignment tape for operation check (WR5-5CSP)
Measurement Point	Emitter of Q205
Measuring Instrument	Oscilloscope
Adjustment Element	RV201

Note: Remove the MD frame assembly to perform adjustments.

Adjusting method:

1) Set RV201 extreme counterclockwise position. (See Fig. 9-30.)
2) Turn RV201 sloely clockwise and stop where the correlative chroma component is minimum.

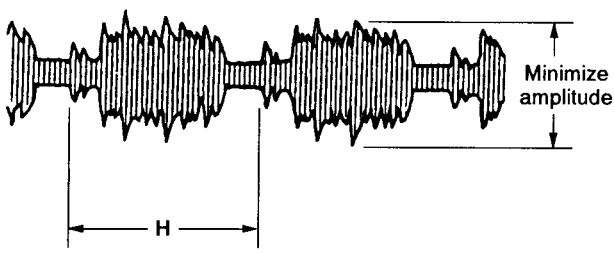

Fig. 9-27.

9-5-17. Quasi Burst Phase Adjustment (VS-69 Board)

1. Method using vectorscope

Mode	Playback
Signal	Alignment tape for operation check (WR5-5CSP)
Measurement Point	VIDEO output terminal (J901)
Measuring Instrument	Vectorscope
Adjusting Element	RV212
Specified Value	Phase of color luminance points in quasi burst mode is same as phase of color luminance points in through burst mode

Adjusting method:

1) Memorize of the phase of the color luminance points (especially yellow). (Through burst mode)
2) Connect cathode of D216 and Pin ② of CN201 with a diode (1SS119, etc.). (Quasi burst mode)

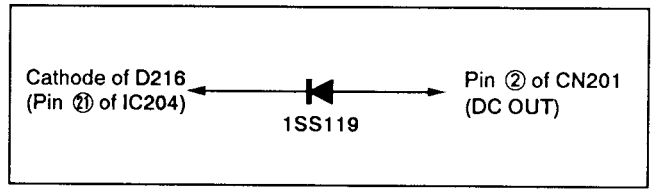

Fig. 9-28.

3) Confirm the color of color bars on the monitor screen. If abnormal, stop the unit and then set the playback mode again.
4) Adjust RV212 so that the phase of the color luminance points is the same as the phase memorized in 1).
5) Remove the diode.

2. Method using monitor TV

Mode	Playback
Signal	Alignment tape for operation check (WR5-5CSP)
Measurement Point	Confirmation on monitor TV screen
Measuring Instrument	
Adjusting Element	RV212
Specified Value	Minimum chroma flickering

Connection:

1) Connect cathode of D216 and Pin ② of CN201 using a diode (1SS119, etc.).

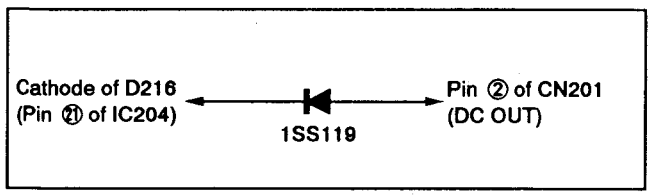

Fig. 9-29.

Adjusting method:

1) Observe the monitor screen. If color is abnormal, stop the unit and then set the playback mode again.
2) Set the monitor color level to maximum and its bright level to minimum.
3) Rotate RV212 fully in the counterclockwise direction (↺).
4) Turn RV212 slowly clockwise and stop where chroma flicker is minimum and horizontal black stripes are least visible.
5) Remove the diode.

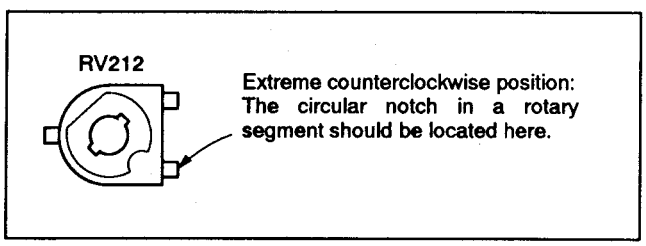

Fig. 9-30.

9-5-18. Delay Burst Phase Adjustment (VS-69 Board)

Mode	Playback pause (LP mode)
Signal	Alignment tape for operation check (WR5-4CL) color bars
Measurement Point	Confirmation on monitor TV screen
Measuring Instrument	
Adjusting Element	RV213
Specified Value	Minimum chroma flickering

Adjusting method:

1) Set the monitor TV color level to maximum and its bright level to minimum.
2) Minimize chroma flicker with RV213 so that horizontal black stripes cannot longer be seen.

9-6. AUDIO SYSTEM ADJUSTMENT

- Perform adjustment with the color bar signal used as the video input signal.

[Connection of audio measuring instruments]

In addition to the video system measuring instruments, connect the audio system measuring instruments as shown in the figure below, and set the power switch to "PLAYER"(*1) position for adjustment.

*1: "VTR" in E, Australian modeles.

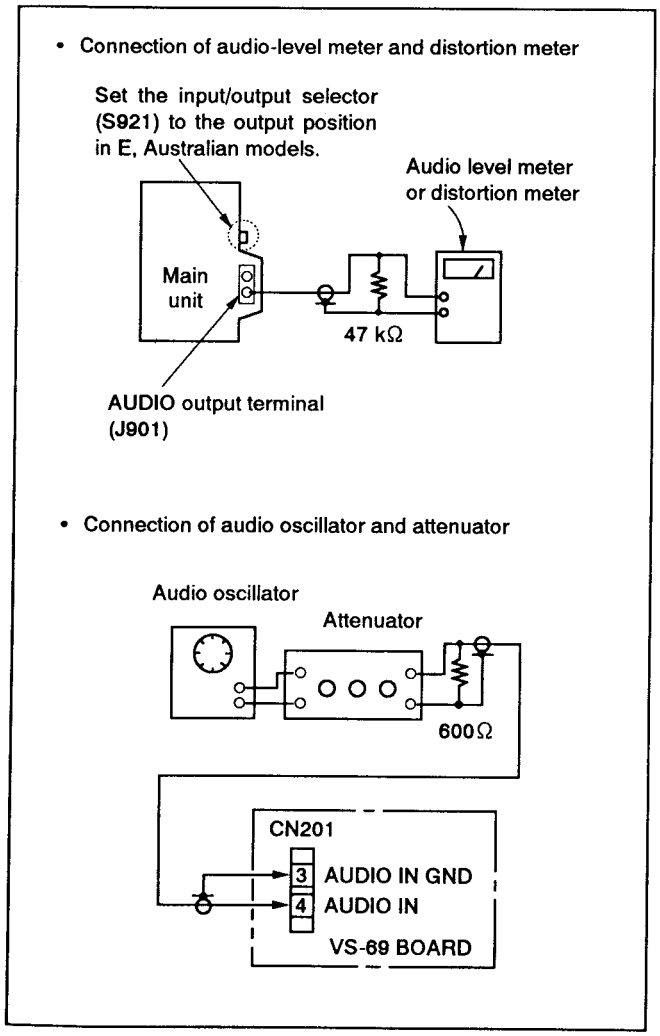

Fig. 9-31.

9-6-1. AFM Carrier Frequency Adjustment (AU-92P Board)

Mode	Recording
Signal	Non-signal
Measurement Point	Pin ⑬ of IC401(REC AFM) (JL419)
Measuring Instrument	Frequency counter
Adjusting Element	RV401
Specified Value	1.505 ± 0.002 MHz

Note: Connect the frequency counter through a buffer amplifier (oscilloscope, etc.) of high impedance and low capacitance.

Adjustment method:

1) Turn OFF the audio oscillator output.
2) Adjust RV401 so that the AFM carrier frequency is 1.505 ± 0.002 MHz.

9-6-2. REC AFM Carrier Level Check (AU-92P Board)

Mode	Recording
Signal	Non-signal
Measurement Point	Pin ⑧ of CN401 (REC AFM)
Measuring Instrument	Oscilloscope
Specified Value	68 ± 12 mVp-p

Checking method:

1) Confirm that the level is 68 ± 12 mVp-p.

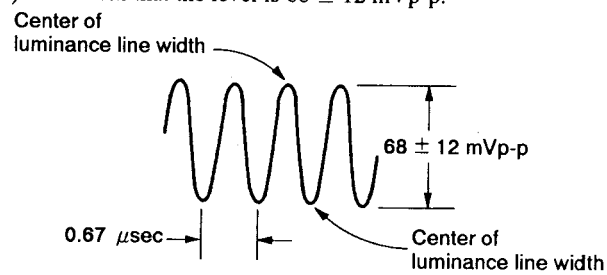

Fig. 9-32. REC AFM carrier level

9-6-3. AFM Deviation Adjustment (AU-92P Board)

Mode	Playback
Signal	Alignment tape: For operation checking (WR5-5CSP)
Measurement Point	Audio output terminal (J901)
Measuring Instrument	Audio level meter
Adjusting Element	RV402
Specified Value	−7.5 ± 0.2 dBs

Checking method:

1) Adjust RV402 so that the audio output level is −7.5 ± 0.2 dBs.

9-6-4. E-E Output Level Check

Mode	E-E
Signal	400 Hz, –7.5 dBs
Measurement Point	Audio output terminal (J901)
Measuring Instrument	Audio level meter
Specified Value	–7.5 ± 2 dBs

Checking method:
1) Make sure that the audio output level is –7.5 ± 2 dBs.

9-6-5. Overall Level Characteristics Check

Mode	Self-recording and playback (SP)
Signal	400 Hz, –7.5 dBs
Measurement Point	Audio output terminal (J901)
Measuring Instrument	Audio level meter
Specified Value	–7.5 ± 3 dBs

Checking method:
1) Record the signal.
2) Playback the recorded section.
3) Make sure that the audio output level is –7.5 ± 3 dBs.

9-6-6. Overall Frequency Characteristics Check

Mode	Self-recording and playback (SP)
Signal	Ⓐ 400 Hz, –17.5 dBs Ⓑ 30 Hz, –17.5 dBs Ⓒ 14 kHz, –17.5 dBs
Measurement Point	Audio output terminal (J901)
Measuring Instrument	Audio level meter
Specified Value	With the 400 Hz playback output level as 0 dB, the playback output level of 30 Hz and 14 kHz is 0 ± 3 dB

Checking method:
1) Record signal Ⓐ through Ⓒ in order.
2) Playback the recorded sections.
3) With the 400 Hz playback output level as 0 dB, confirm that the playback output level of 30 Hz and 14 kHz is 0 ± 3 dB.

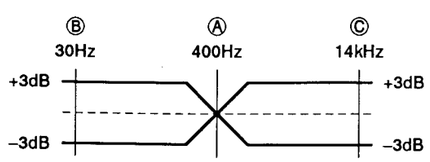

Fig. 9-33. AFM overall frequency characteristics

9-6-7. Overall Distortion Check

Mode	Self recording and playback (SP)
Signal	400 Hz, –7.5 dBs
Measurement Point	Audio output terminal (J901)
Measuring Instrument	Distortion meter
Specified Value	Less than 0.5% *1

Checking method:
1) Record the signal.
2) Playback the recorded section.
3) Confirm that the distortion is less than 0.5%. *1
   *1 Value when 200 Hz to 6 kHz 18dB/oct BPF is used.
   When the filter is not used ..... less than 1.0%

9-6-8. Overall Noise Level Check

Mode	Self-recording and playback (SP)
Signal	No signal (shorting plug is inserted into audio input terminal)
Measurement Point	Audio output terminal (J901)
Measuring Instrument	Audio level meter
Specified Value	Less than – 67.5 dBs*2

Checking method:
1) Record the signal.
2) Playback the recorded section.
3) Make sure that the noise level is less than –67.5 dBs. *2
   *2 Value when IHF-A hearing correction filter is used.

9-7. ARRANGEMENT DIAGRAMS FOR ADJUSTMENT PARTS

VC-81P BOARD (COMPONENT SIDE)
(Also illustrated on page 270.)

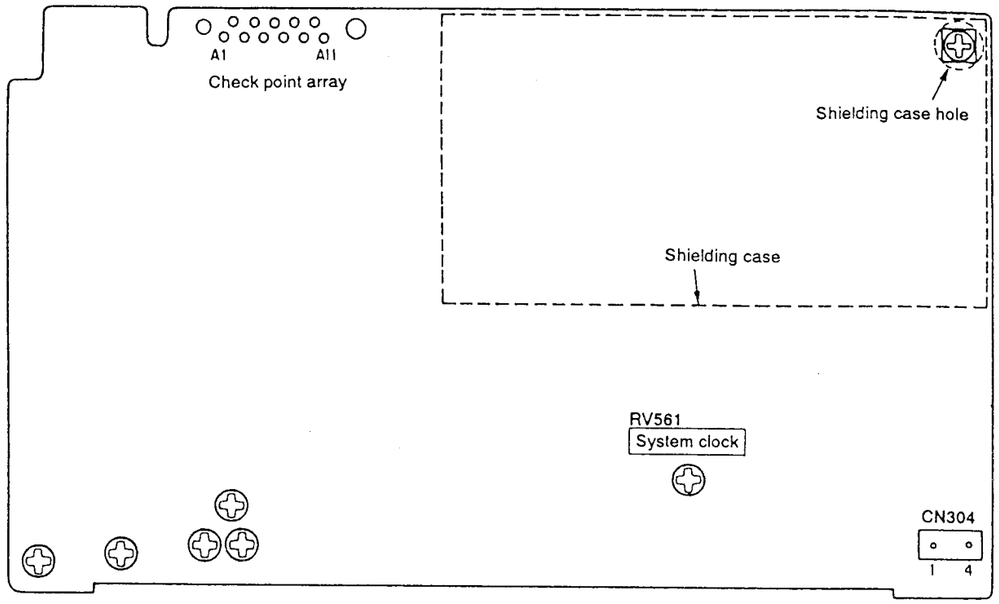

VC-81P BOARD (CONDUCTOR SIDE)
(Also illustrated on page 270.)

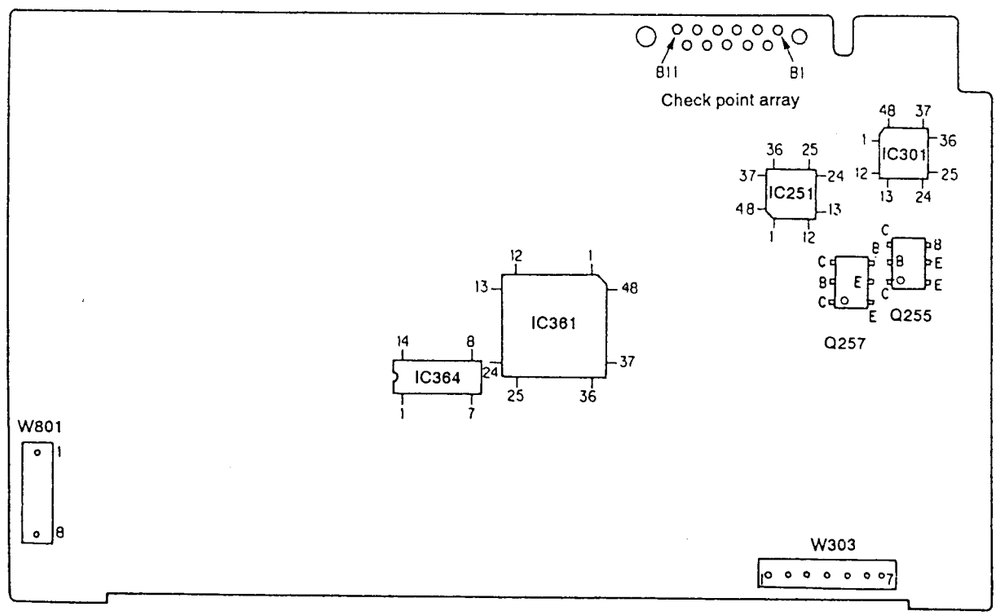

VC-81P BOARD (COMPONENT SIDE)
(Also illustrated on page 270.)

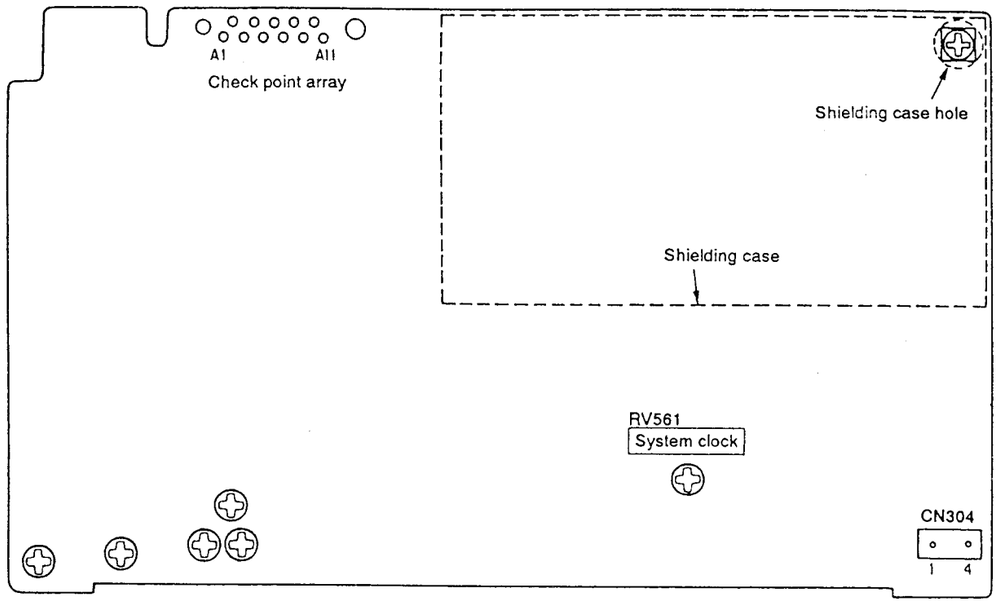

VC-81P BOARD (CONDUCTOR SIDE)
(Also illustrated on page 270.)

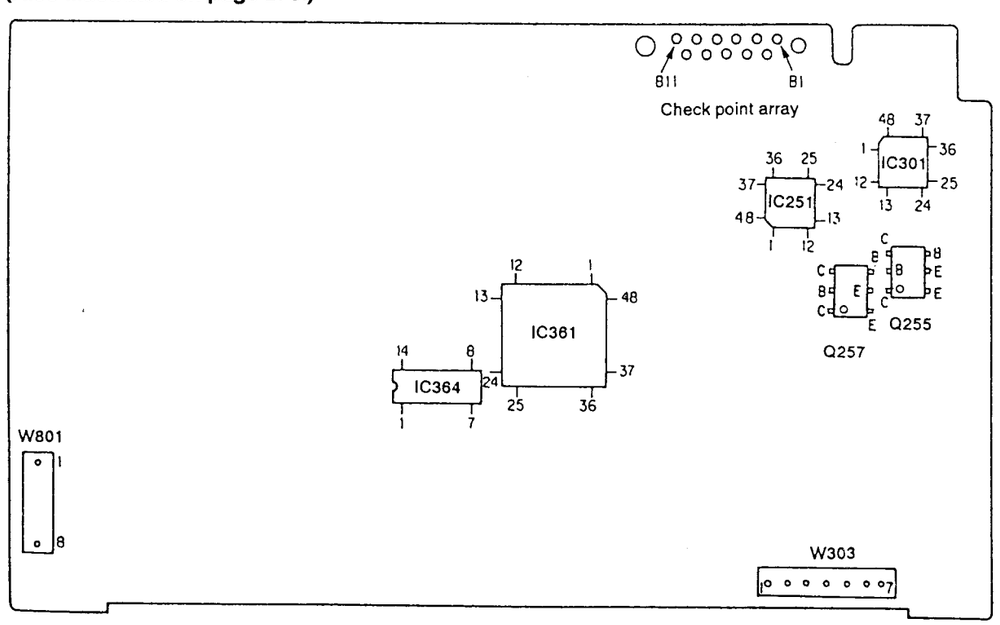

VS-69 BOARD (COMPONENT SIDE)

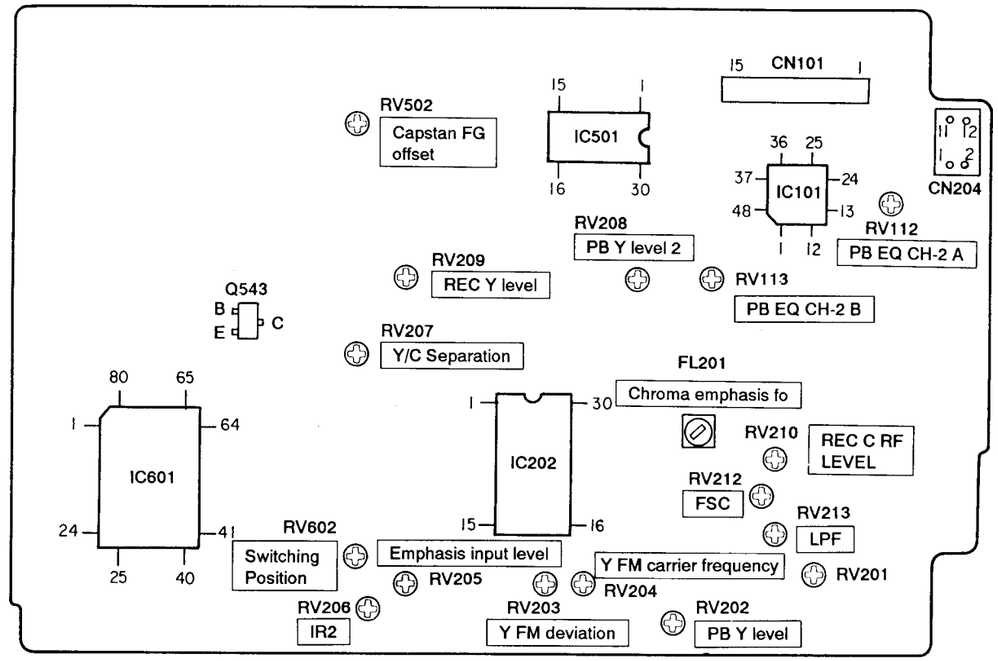

DD-31P BOARD (COMPONENT SIDE)

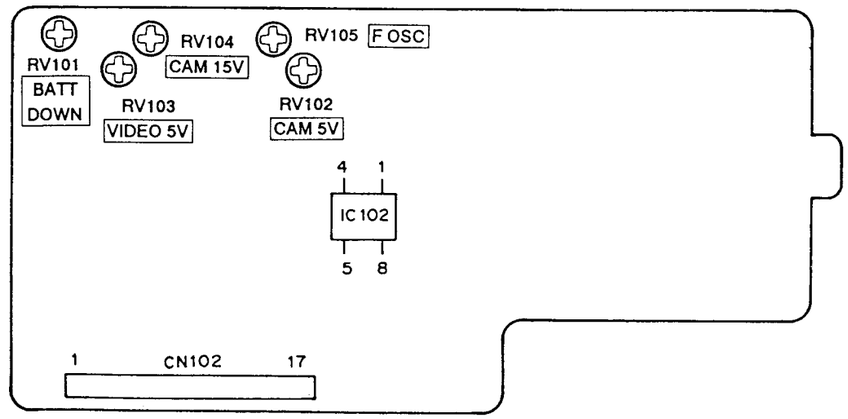

AU-92P BOARD (COMPONENT SIDE)

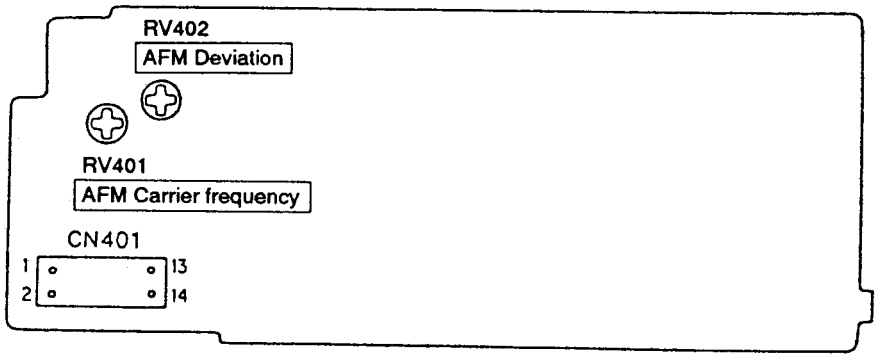

AU-92P BOARD (CONDUCTOR SIDE)

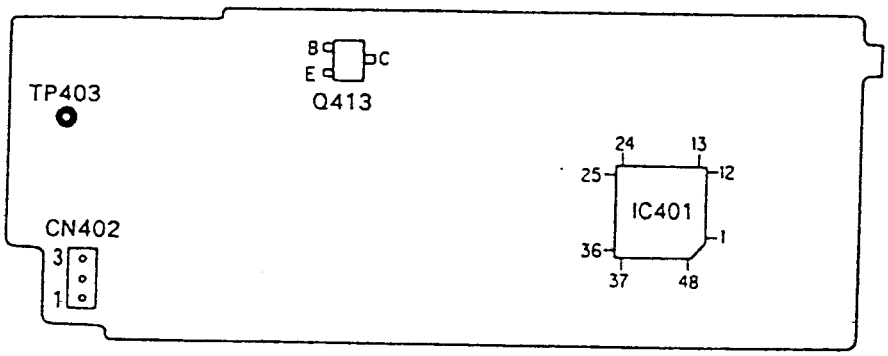

CC-52P BOARD (CONDUCTOR SIDE)

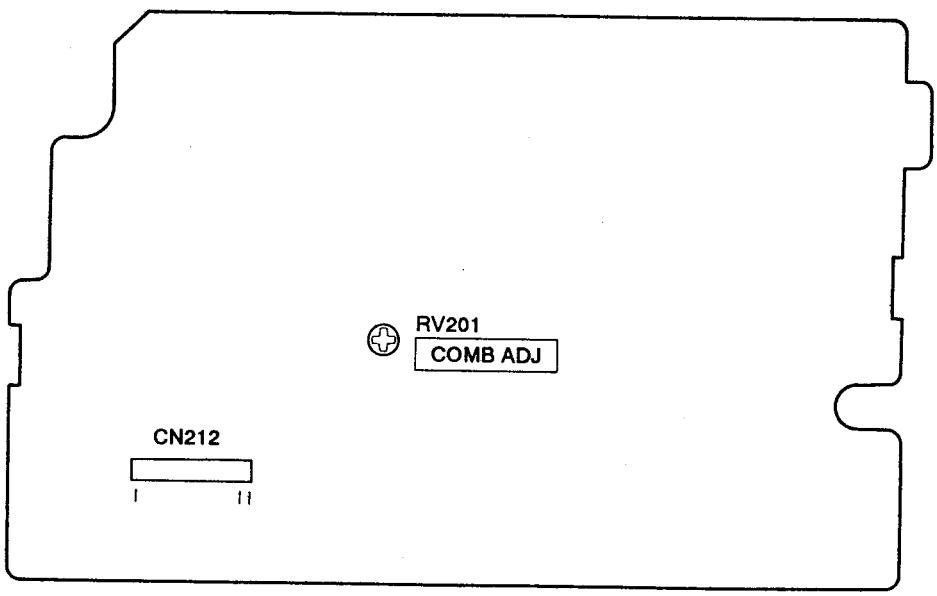

CCD-V50E

SONY®

SERVICE MANUAL

AEP Model
UK Model
E Model
Australian Model

SUPPLEMENT-1

Subject: The circuit has been changed

- This supplement updates the service manual to include production changes.
- File this supplement-1 with the service manual.
- The schematic diagram, printed wiring board and electrical parts list in this service manual have been revised according to change of the last digits of the part number of RZ-1 board are- 24 .

SECTION 1
PRINTED WIRING BOARD AND SCHEMATIC DIAGRAM

RZ-1 (ZOOM DRIVER) PRINTED WIRING BOARD

—Ref. No. RZ-1 BOARD : 4,000 series—

RZ-1 BOARD (COMPONENT SIDE)

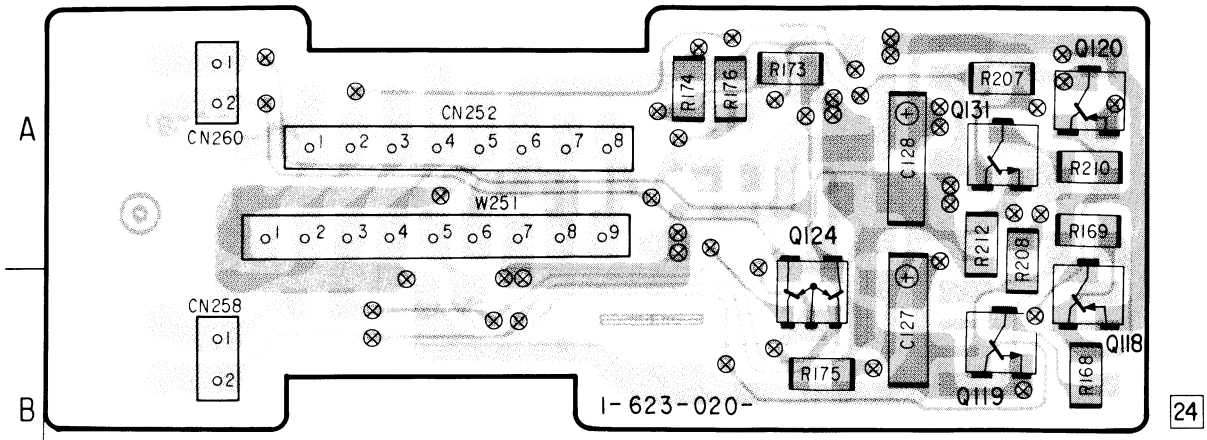

RZ-1 BOARD (CONDUCTOR SIDE)

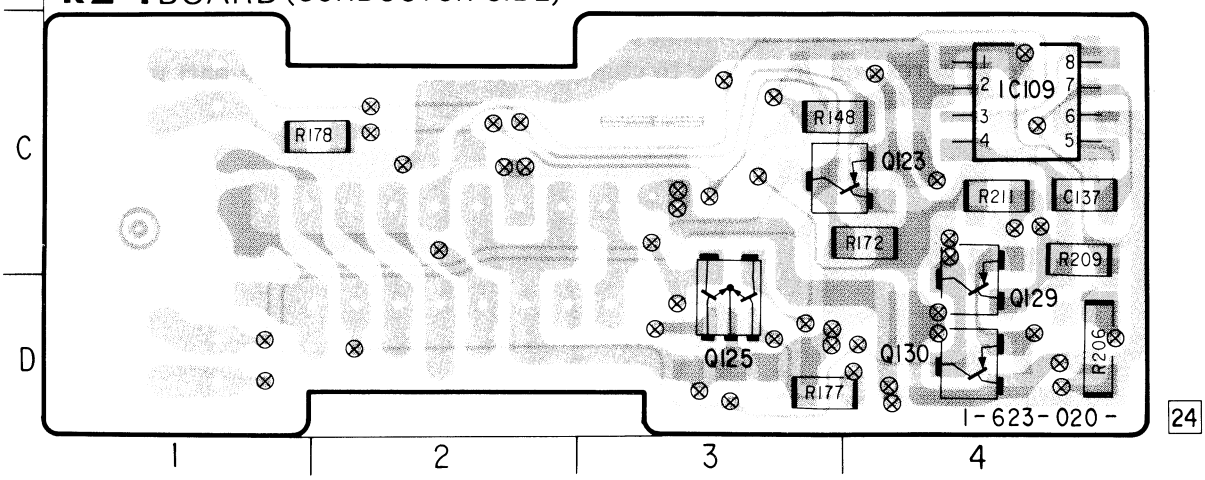

Note:

- : indicates a lead wire mounted on the component side.
- : Through hole.
- : Pattern from the side which enables seeing.
- : Pattern of the rear side.

Caution:
Pattern face side: (Conductor Side) Parts on the pattern face side seen from the pattern face are indicated.
Parts face side: (Component Side) Parts on the parts face side seen from the parts face are indicated.

When indicating parts by reference number, please include the board name.

RZ-1 (ZOOM DRIVER) SCHEMATIC DIAGRAM

—Ref, No, RZ-1 BOARD : 4,000 series—

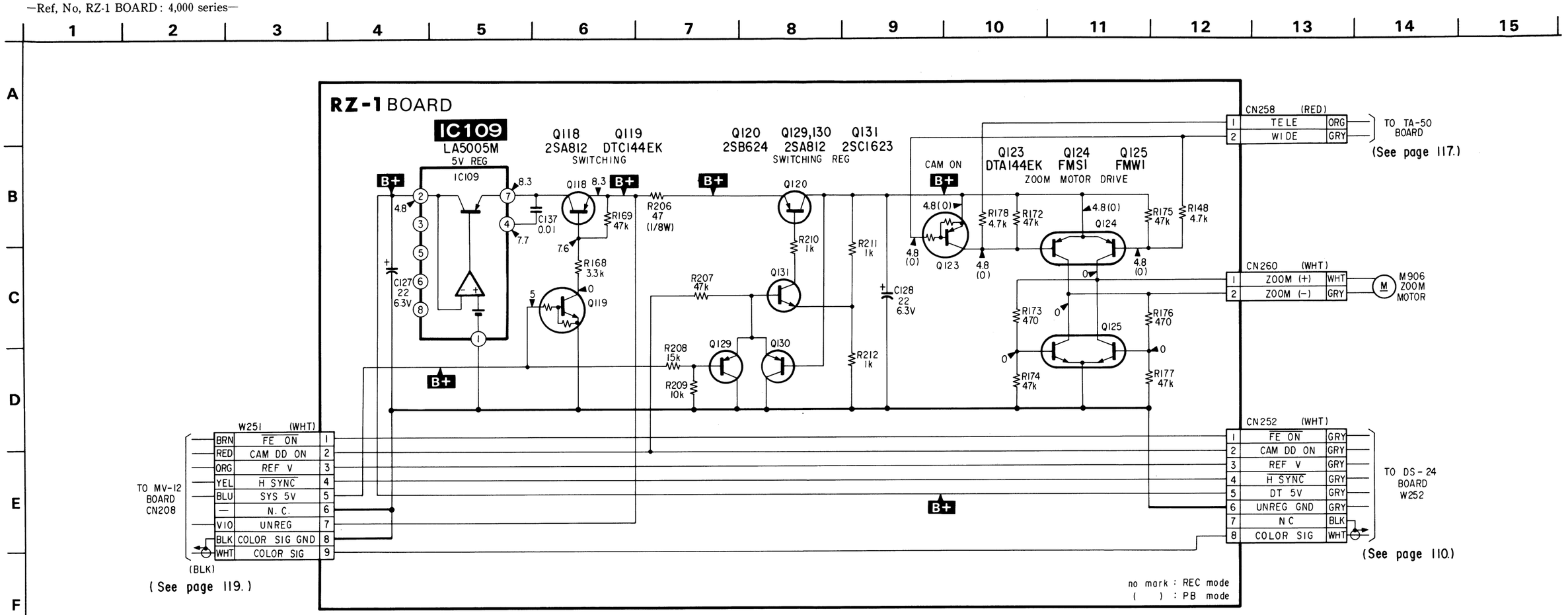

Note:

- Caution when replacing chip parts.
  New parts must be attached after removal of chip.
  Be careful not to heat the minus side of tantalum capacitor, because it is damaged by the heat.
- All resistors are in ohms, 1/6W unless otherwise noted.
  kΩ: 1000Ω, MΩ: 1000kΩ.
- All capacitors are in μF unless otherwise noted. pF : μμF.
  50V or less are not indicated except for electrolytics and tantalums.
- All variable and adjustable resistors have characteristic curve B, unless otherwise noted.
- (See page□.)as target of connector shows the page of Service Manual.
- Voltage and waveform measuring conditions:
  (1) Sample object: Pattern box colour bars.
  (2) Voltage values: Relative to ground, measured with a DC digital multimeter (impedance 10M-ohm or more).

1. Connection

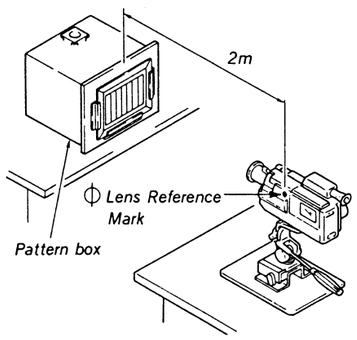

2. Adjust the zooming of camera and the tripod so that the output waveform of Fig. a and the picture of Fig. b can be obtain.

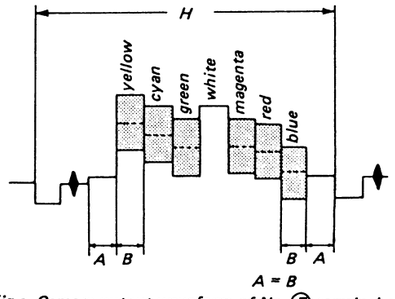

Fig.a Camera output waveform of No. ⑦ terminal of FP-81 flexible board.

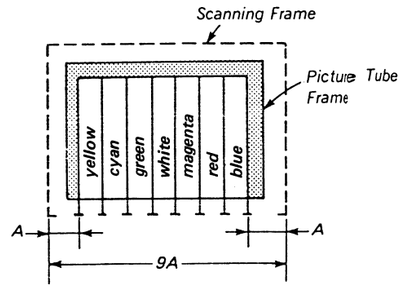

Fig. b Picture of TV monitor screen.

SECTION 2
ELECTRICAL PARTS LIST

NOTE:

- Due to standardization, replacements in the parts list may be different from the parts specified in the diagrams or the components used on the set.
- Items marked "*" are not stocked since they are seldom required for routine service. Some delay should be anticipated when ordering these items.
- If there are two or more same circuits in a set such as a stereophonic machine, only typical circuit parts may be indicated and capacitors and resistors in other same circuits may be omitted.

CAPACITORS:
MF: μF, PF: μμF.

RESISTORS
- All resistors are in ohms.
- F: nonflammable

COILS
- MMH: mH, UH: μH

SEMICONDUCTORS
In each case, U: μ, for example:
UA...: μA..., UPA...: μPA...,
UPC...: μPC, UPD...: μPD...

The components identified by mark ⚠ or dotted line with mark ⚠ are critical for safety.
Replace only with part number specified.

When indicating parts by reference number, please include the board name.

Ref.No.	Part No.	Description			Remark
	*A-7070-496-A	RZ-1 BOARD, COMPLETE			
		**********			
		CAPACITOR			
C127	1-124-778-21	TANTAL. CHIP	22MF	20% 6.3V	
C128	1-124-778-21	TANTAL. CHIP	22MF	20% 6.3V	
C137	1-163-021-00	CERAMIC CHIP	0.01MF	50V	
		CONNECTOR			
CN252	*1-564-007-00	PIN, CONNECTOR 8P			
CN258	*1-564-012-31	PIN, CONNECTOR 2P			
CN260	*1-564-012-00	PIN, CONNECTOR 2P			
		IC			
IC109	8-759-803-47	IC LA5005M			
		TRANSISTOR			
Q118	8-729-100-76	TRANSISTOR 2SA812			
Q119	8-729-901-01	TRANSISTOR DTC144EK			
Q120	8-762-162-44	TRANSISTOR 2SB624-V4			
Q123	8-729-901-06	TRANSISTOR DTA144EK			
Q124	8-729-902-96	TRANSISTOR FMS1			
Q125	8-729-903-10	TRANSISTOR FMW1			
Q129	8-729-100-76	TRANSISTOR 2SA812			
Q130	8-729-100-76	TRANSISTOR 2SA812			
Q131	8-729-100-67	TRANSISTOR 2SC1623-L7			
		RESISTOR			
R148	1-216-065-00	METAL CHIP	4.7K	5% 1/10W	
R168	1-216-061-00	METAL CHIP	3.3K	5% 1/10W	
R169	1-216-089-00	METAL CHIP	47K	5% 1/10W	
R172	1-216-089-00	METAL CHIP	47K	5% 1/10W	
R173	1-216-041-00	METAL CHIP	470	5% 1/10W	
R174	1-216-089-00	METAL CHIP	47K	5% 1/10W	
R175	1-216-089-00	METAL CHIP	47K	5% 1/10W	
R176	1-216-041-00	METAL CHIP	470	5% 1/10W	
R177	1-216-089-00	METAL CHIP	47K	5% 1/10W	
R178	1-216-065-00	METAL CHIP	4.7K	5% 1/10W	
R206	1-216-166-00	METAL CHIP	47	5% 1/8W	
R207	1-216-089-00	METAL CHIP	47K	5% 1/10W	
R208	1-216-077-00	METAL CHIP	15K	5% 1/10W	
R209	1-216-073-00	METAL CHIP	10K	5% 1/10W	
R210	1-216-049-00	METAL CHIP	1K	5% 1/10W	
R211	1-216-049-00	METAL CHIP	1K	5% 1/10W	
R212	1-216-049-00	METAL CHIP	1K	5% 1/10W	
		CONNECTOR			
W251	*1-564-008-11	PIN, CONNECTOR 9P			

9-972-571-82

Sony Corporation
Personal Video Group

English
8810451-1
Printed in Japan
© 1988.9
Published by A/V Engineering Service Dept.